Environmental Resources Management

One Beacon Street, 5th Floor
Boston, MA 02108
+1 617 646 7800
+1 617 267 6447 (fax)

www.erm.com

15 May 2013
Reference: 0196270

Massachusetts Department of Environmental Protection
Northeast Regional Office
Bureau of Waste Site Cleanup
205B Lowell Street
Wilmington, MA 01887

Re: Remedy Operation Status Submittal
November 2012 through April 2013
Former Raytheon Facility
Wayland, Massachusetts
Release Tracking Nos. 3-13302 and 3-22408,
Tier IB Permit Nos. 133939 and W045278

Dear Sir or Madam:

On behalf of Raytheon Company (Raytheon), Environmental Resources Management (ERM) has prepared this Remedy Operation Status (ROS) Submittal for the Former Raytheon Facility located at 430 Boston Post Road in Wayland, Massachusetts (Site; Figure 1). This report covers the period from 01 November 2012 to 31 March 2013 to satisfy the requirements of the Massachusetts Contingency Plan (MCP) at 310 CMR 40.0893. The Massachusetts Department of Environmental Protection (MassDEP) ROS transmittal form (BWSC 108) and Remedial Monitoring Reports (RMRs) were filed electronically via eDEP; copies of the forms are included in Appendix A.

This report will discuss groundwater remediation and monitoring activities that have been conducted at the Site since the submission of the November 2012 ROS submittal.

BACKGROUND

This submittal incorporates the ongoing bioremediation activities in the Northern Area of the Site (Figure 2) with the ongoing Southern Area in situ chemical oxidation (ISCO) program. Northern Area Response Actions were formerly tracked under Release Tracking Number (RTN) 3-22408. These RTNs were linked under 3-13302 in a letter submitted to MassDEP on 9 June 2009.

RTN 3-13302

A Phase IV Completion Report was submitted for RTN 3-13302 on 24 November 2004 to MassDEP for portions of the approximately 83-acre property (Figure 2). The Phase IV Completion Report documented wetland remediation activities conducted from October 2003 through October 2004, and groundwater remediation activities conducted from May through July 2004.

Since completion of Phase IV activities, ROS reports were submitted to MassDEP summarizing the following periods:

- December 2004 through April 2005, dated 20 May 2005;
- May 2005 through November 2005, dated 14 November 2005;
- November 2005 through May 2006, dated 19 May 2006;
- May 2006 through November 2006, dated 20 November 2006;
- November 2006 through May 2007, dated 17 May 2007;
- June 2007 through October 2007, dated 15 November 2007;
- November 2007 through April 2008, dated 29 May 2008;
- May 2008 through October 2008, dated 9 December 2008;
- November 2008 through April 2009, dated 9 June 2009;
- May 2009 through October 2008, dated 16 November 2009;
- November 2009 through April 2010, dated 20 May 2010;
- May 2010 through October 2010, dated 8 November 2010;
- November 2010 through April 2011, dated 13 May 2011;
- May 2011 through October 2011, dated 7 November 2011; and
- October 2011 through April 2012, dated 15 May 2012.

- May 2012 through October 2012, dated 15 November 2012.

RTN 3-22408

A Phase IV Completion Report was submitted for RTN 3-22408 on 23 December 2008 for the chlorinated volatile organic compound (CVOC) impacts to Northern Area soil and groundwater. Beginning with the 9 June 2009 report, activities formerly conducted under this RTN have been summarized jointly with those under RTN 3-13302 in the ROS submittals described above.

Current Property Conditions

The property is currently under redevelopment by the property owner. All pre-existing buildings have been razed, the Site has been graded, and new buildings are under construction or are now completed and occupied. Most of the Southern Area monitoring wells were decommissioned prior to the redevelopment, an effort that has been described in previous ROS submittals.

A new monitoring well network has been installed in the Southern Area during this reporting period. Those activities are described below.

NORTHERN AREA BIOREMEDIATION ACTIVITIES

Northern Area bioremediation Response Actions were conducted by Innovative Engineering Solutions, Inc. of Walpole, Massachusetts (IESI) during this reporting period. Appendix B includes a memorandum prepared by IESI to document those activities.

The bioremediation system was expanded during this reporting period to provide more coverage of downgradient areas of impact. Appendix B contains details on the expansion activities.

SOUTHERN AREA MONITORING WELL INSTALLATION

Thirty-five monitoring wells were installed in the Southern Area from September 2012 to January 2013 (Figure 3). Monitoring well logs for the Southern Area monitoring wells are included in Appendix C.

A Request for Determination of Applicability (RDA) was filed with the Wayland Conservation Commission on 16 October 2012 in order to obtain approval for the installation of five monitoring wells within areas of the 100-foot Buffer Zone to Bordering Vegetated Wetland. A Negative Determination was granted by the Commission.

The newly installed wells were developed in October 2012, December 2012, and January 2013 by ERM personnel via the over pumping method described in MassDEP guidance. Purge water generated by the well development activities in September/October 2012 was containerized in 55 gallon drums (Drums 1-6 on Table 1) and representative samples were collected and sent to TestAmerica, Inc. of Westfield, Massachusetts (TestAmerica) for laboratory analysis of volatile organic compounds (VOCs) by U.S. Environmental Protection Agency (USEPA) Method 8260C. There were no detections above MassDEP Method GW-1 standards (Table 1) and the water was released to a "temporary construction sedimentation basin" on Site.

The soil and drill cuttings generated (samples S-1, S-2, and S-3 on Table 1) during the September/October 2012 well installation activities were placed in a designated stockpile area located outside the 100-foot Buffer Zone. The stockpile area was constructed using polyethylene sheeting and strawbales and the material was covered whenever not in use to protect it from the elements. Representative samples were collected from the stockpiled materials and sent to TestAmerica for VOCs analysis by USEPA Method 8260C. There were no detections of any compounds above MCP Method 1 S-1/GW-1 standards (Table 1). Laboratory analytical reports are provided in Appendix D. The stockpiled materials were spread at ground surface outside the 100-foot Buffer Zone.

Purge water generated by well development activities in December 2012 and January 2013 was containerized in two 325-gallon totes and one 55-gallon drum (samples Tote 1, Tote 2, and Drum on Table 1). The containerized purge water was sampled and analyzed for VOCs via USEPA Method 8260C by TestAmerica. As shown in Table 1, the samples contained detections of trichloroethene (TCE) and were transported and disposed of off Site by Clean Harbors Environmental Services, Inc. (CHES) in February 2013. Disposal documentation is provided in Appendix E.

Drill cuttings generated by the January 2013 well installation activities were containerized in 55-gallon drums. The drums were sampled and analyzed for VOCs via USEPA Method 8260C by TestAmerica. Results of the drum sampling are summarized in Table 1, and laboratory analytical reports are provided in Appendix D. Samples collected from a drum containing material from MW-1034 contained concentrations of TCE slightly above GW-1 standards. Consequently, the three 55-gallon drums of material from that well were transported and disposed of off Site by CHES in February 2013. Disposal documentation is provided in Appendix E.

NORTHERN AREA GROUNDWATER SAMPLING

Quarterly groundwater sampling in the Northern Area was conducted by IESI in January and March 2013. Groundwater sampling results are summarized in Appendix B.

SOUTHERN AREA GROUNDWATER SAMPLING

Semi-annual groundwater sampling in the Southern Area was conducted by ERM in March 2013. Groundwater monitoring activities included:

- Collection of groundwater samples via USEPA low-flow methods for laboratory analyses;
- Groundwater gauging; and/or
- Field measurement of groundwater geochemical parameters, including: temperature, conductivity, pH, dissolved oxygen concentration, and oxidation-reduction potential (ORP).

Groundwater samples were analyzed for VOCs by USEPA Method 8260C by TestAmerica. One groundwater sample (MW-1010M) was analyzed for permanganate by a colorimetric method by ERM. Groundwater gauging data for the March 2013 sampling event is included in Table 2. Survey elevations are to be obtained from the Site owner. A summary table of the geochemical parameters is included in Table 3, and a summary of the laboratory analytical data from the

Southern Area monitoring wells is included in Table 4. Groundwater laboratory analytical reports are provided in Appendix D.

Groundwater monitoring results indicate that the following analytes exceeded the MCP GW-1 standards in one or more of the Southern Area monitoring wells: TCE; 1,1-dichloroethene; 1,4-dioxane; and methyl tertiary-butyl ether (MTBE). Figure 4 summarizes TCE detections in the Southern Area monitoring wells during the March 2013 sampling event. Exceedances of the GW-1 standard for MTBE were documented in a Downgradient Property Status determination that was filed in November 2007.

Results of the Northern Area groundwater sampling are provided in Appendix B.

If you have any questions or comments in regard to this submittal please contact the undersigned at (617) 646-7800.

Sincerely,

John C. Drobinski, P.G., LSP
Principal–in-Charge

Jason D. Flattery, P.E.
Project Manager

encl:

Table 1	IDW Analytical Summary
Table 2	Groundwater Gauging Summary
Table 3	Summary of Groundwater Field Parameters
Table 4	Groundwater Analytical Summary Table

Figure 1	Site Locus Map
Figure 2	Remediation Site Plan
Figure 3	Monitoring Well Locations - Southern Area
Figure 4	March 2013 TCE Concentrations in Groundwater – Southern Area

Appendix A	BWSC Forms
Appendix B	IESI Appendix
Appendix C	Boring Logs
Appendix D	Laboratory Reports
Appendix E	Waste Disposal Documentation

cc: Jonathan Hone, Raytheon
Benson Gould, CMG Environmental
Brian Monahan, Town of Wayland Conservation Commission
Anthony DeLuca, Koffler Group
Richard Gass, Wayland Meadows
Nancy Roberts, Roberts Consulting
Sami Fam, IESI
Public Repositories

Tables

Table 1
IDW Analytical Summary
Southern Area
Fomer Raytheon Facility
Wayland, Massachusetts

Development Water

Sample Description		**Drum**	**Drum**	**Drum**	**Drum**	**Drum**	**Drum**	**Tote 1**	**Tote 1**	**Tote 2**	**Drum**
Sample ID	MCP	**Drum-1**	**Drum-2**	**Drum-3**	**Drum-4**	**Drum-5**	**Drum-6**	**CS-01**	**FD**	**CS-02**	**CS-03**
Date Collected	GW-1	4-Oct-12	4-Oct-12	4-Oct-12	4-Oct-12	4-Oct-12	4-Oct-12	16-Jan-13	16-Jan-13	16-Jan-13	16-Jan-13
VOCs by 8260 (µg/L)											
Acetone	6,300	ND	ND	55	ND	ND	ND	ND	ND	ND	ND
Trichloroethene	5	ND	ND	ND	ND	ND	1.6	**21**	**20**	**12**	**12**
cis-1,2,-dichloroethene	70	ND	ND	ND	ND	ND	ND	3.3	3.0	1.9	2.3
Methyl tert butyl ether	70	1.4	ND	ND	ND	ND	ND	6.2	5.9	5.9	2.1

Drilling Residuals

Sample ID			**S-1 (stockpile**	**S-2 (stockpile)**	**S-3 (stockpile)**	**MW-1004**	**MW-1008**	**MW-1027**	**MW-1028**	**MW-1033**	**MW-1034**	**MW-1034**
Date Collected			4-Oct-12	4-Oct-12	4-Oct-12	11-Jan-13	11-Jan-13	11-Jan-13	11-Jan-13	11-Jan-13	11-Jan-13	11-Jan-13
Matrix	MCP	MCP	Soil	Soil	Soil	Soil	Soil	Water	Water	Water	Water	Water
Note	GW-1	S1/GW1	(mg/kg)	(mg/kg)	(mg/kg)	(mg/kg)	(mg/kg)	(µg/L)	(µg/L)	(µg/L)	(µg/L)	DUP
VOCs by 8260	(µg/L)	(mg/kg)										
Trichloroethene	5	0.3	ND	ND	ND	ND	ND	ND	ND	2.8	**6.8**	**6.6**
cis-1,2,-dichloroethene	70	0.3	ND	ND	ND	ND	ND	ND	ND	ND	ND	ND
1,1,1-Trichloroethane	200	30	ND	ND	ND	ND	ND	ND	ND	1.0	2.2	2.1
Methyl tert butyl ether	70	0.1	ND	ND	ND	ND	ND	ND	ND	ND	ND	ND
4-isopropyltoluene	NS	NS	ND	ND	ND	ND	ND	ND	1.3	ND	ND	ND
Naphthalene	140	4	ND	ND	ND	ND	ND	ND	9.1	5.1	5.6	7.4

Notes:
MCP = Massachusetts Contingency Plan
mg/kg = milligrams per kilogram
ND = Analyte not detected above the laboratory reporting limit
NS = No established standard under the MCP
Shaded = Analyte concentration exceeded applicable MCP criteria
µg/L = micrograms per liter

Table 2
Groundwater Gauging Summary
Southern Area
Former Raytheon Facility
Wayland, Massachusetts

	March 2013		
Well Designation	**Measuring Point Elevation** (ft ASL)	**Depth to Water** (ft)	**Potentiometric Surface Elevation** (ft ASL)
MW-1001M	---	13.31	---
MW-1001B	---	14.28	---
MW-1002M	---	13.79	---
MW-1002B	---	14.12	---
MW-1003	---	11.34	---
MW-1004	---	13.85	---
MW-1005	---	13.65	---
MW-1006	---	14.52	---
MW-1008	---	14.29	---
MW-1009	---	14.83	---
MW-1010M	---	13.78	---
MW-1010D	---	14.12	---
MW-1011	---	14.28	---
MW-1013	---	13.33	---
MW-1014	---	15.10	---
MW-1015D	---	14.74	---
MW-1016D	---	14.62	---
MW-1017D	---	14.42	---
MW-1018	---	15.29	---
MW-1019B	---	13.25	---
MW-1020	---	14.96	---
MW-1022	---	14.38	---
MW-1023	---	13.98	---
MW-1024D	---	12.39	---
MW-1025M	---	12.91	---
MW-1025D	---	12.48	---
MW-1026D	---	13.17	---
MW-1027	---	9.11	---
MW-1028	---	10.31	---
MW-1030	---	15.72	---
MW-1031	---	12.81	---
MW-1032	---	12.51	---
MW-1033	---	2.44	---
MW-1034	---	5.60	---
MW-217S	130.06	11.36	118.70
MW-217M	130.44	12.01	118.43
MW-217D	130.20	11.51	118.69

Notes:
ASL = Above mean sea level.
NR = Not recorded, anomalous result.
--- = Data not available; top-of-casing elevations will be surveyed on the new monitoring wells during the next reporting period

Table 3
Summary of Groundwater Field Parameters
Souther Area
Former Raytheon Facilitiy
Wayland, Massachusetts

Field Parameter	Location ID Sample Date Unit	MW-1001B 21-Mar-13	MW-1001M 21-Mar-13	MW-1002B 22-Mar-13	MW-1002M 22-Mar-13	MW-1003 22-Mar-13	MW-1004 21-Mar-13	MW-1005 19-Mar-13	MW-1006 20-Mar-13	MW-1008 19-Mar-13	MW-1009 21-Mar-13	MW-1010D 20-Mar-13	MW-1010M 20-Mar-13
Dissolved Oxygen	mg/l	0.42	0.60	0.39	5.55	0.31	0.32	0.26	0.85	0.35	0.44	0.34	
Oxidation-Reduction Potential	mV	-177.1	-130.9	-101.2	39.3	-117.0	128.6	69.3	163.9	-28.2	10.5	120.2	
pH	pH units	13.29	7.44	13.31	7.25	8.00	6.27	7.87	7.76	6.87	6.90	7.59	
Specific Conductivity	uS/cm	7213	3367	700	104	586	1081	814	207	410	1226	504	
Temperature	deg C	5.97	8.97	5.93	8.71	9.55	10.54	10.01	10.42	7.83	10.01	10.45	
Color	-												Pink
Sodium permanganate	mg/l												< 1

Notes:
- = No Unit
deg C = degrees Celsius
mg/L = milligrams per liter
mV = millivolts
pH units = pH units
uS/cm = microSiemens per centimeter
NM = Not Measured

Table 3
Summary of Groundwater Field Parameters
Souther Area
Former Raytheon Facilitiy
Wayland, Massachusetts

Field Parameter	Location ID Sample Date Unit	MW-1012 19-Mar-13	MW-1013 22-Mar-13	MW-1015D 20-Mar-13	MW-1016D 22-Mar-13	MW-1017D 19-Mar-13	MW-1018 19-Mar-13	MW-1019B 19-Mar-13	MW-1020 20-Mar-13	MW-1022 20-Mar-13	MW-1023 20-Mar-13	MW-1024D 22-Mar-13	MW-1025D 21-Mar-13
Dissolved Oxygen	mg/l	0.34	4.85	0.35	0.33	0.26	1.64	0.18	0.24	0.33	0.24	0.38	0.19
Oxidation-Reduction Potential	mV	8.3	58.1	218.6	-294.8	-102.4	137.2	-125.3	208.3	203.7	82.6	-110.9	-176
pH	pH units	7.49	7.49	7.43	6.81	6.49	6.14	12.94	5.48	6.76	6.64	6.64	7.21
Specific Conductivity	uS/cm	722	370	787	3443	419	159	9921	310	507	1071	953	376
Temperature	deg C	5.85	8.43	10.69	9.11	10.33	7.98	10.24	10.20	8.61	10.00	11.67	11.19
Color	-												
Sodium permanganate	mg/l												

Notes:
- = No Unit
deg C = degrees Celsius
mg/L = milligrams per liter
mV = millivolts
pH units = pH units
uS/cm = microSiemens per centimeter
NM = Not Measured

Table 3
Summary of Groundwater Field Parameters
Souther Area
Former Raytheon Facilitiy
Wayland, Massachusetts

Field Parameter	Location ID Sample Date Unit	MW-1025M 20-Mar-13	MW-1026D 22-Mar-13	MW-1027 20-Mar-13	MW-1028 20-Mar-13	MW-1030 20-Mar-13	MW-1031 21-Mar-13	MW-1032 19-Mar-13	MW-1033 20-Mar-13	MW-1034 20-Mar-13	MW-217D 21-Mar-13	MW-217M 21-Mar-13	MW-217S 21-Mar-13
Dissolved Oxygen	mg/l	0.25	0.21	0.29	0.39	2.18	5.4	0.15	0.26	0.47	0.43	0.67	0.64
Oxidation-Reduction Potential	mV	141.2	-160.4	44.6	68.7	199.6	-25.4	-60.7	6.5	140.2	-75.2	116.7	145.1
pH	pH units	6.66	7.54	6.99	6.41	7.30	9.38	6.62	7.17	8.46	6.94	6.55	6.03
Specific Conductivity	uS/cm	503	413	519	7.18	243	554	1452	441	862	270	340	409
Temperature	deg C	12.66	9.76	12.36	11.25	10.27	12.01	10.52	9.32	10.92	3.41	5.38	5.01
Color	-												
Sodium permanganate	mg/l												

Notes:
- = No Unit
deg C = degrees Celsius
mg/L = milligrams per liter
mV = millivolts
pH units = pH units
uS/cm = microSiemens per centimeter
NM = Not Measured

Table 4
Groundwater Analytical Summary Table
Southern Area
Former Raytheon Facility
Wayland, Massachusetts

Analyte	Location ID Sample Date Sample Type GW-1	MW-217D 21-Mar-13 N	MW-217M 21-Mar-13 N	MW-217S 21-Mar-13 N	MW-1001B 21-Mar-13 N	MW-1001M 21-Mar-13 N	MW-1002B 22-Mar-13 N	MW-1002M 22-Mar-13 N	MW-1003 22-Mar-13 N	MW-1004 21-Mar-13 N	MW-1005 19-Mar-13 N	MW-1006 20-Mar-13 N	MW-1008 19-Mar-13 N	MW-1009 21-Mar-13 N	MW-1010D 20-Mar-13 N	MW-1010M 20-Mar-13 N	MW-1011 19-Mar-13 N	MW-1013 22-Mar-13 N
Method EPA522, µg/L																		
1,4-Dioxane	**3**																	
Method SW8260B_SIM, µg/L																		
1,4-Dioxane	**3**																	
Method SW8260C, µg/L																		
1,1,1-Trichloroethane	200	*< 1.0*	*< 1.0*	*< 1.0*	*< 1.0*	*< 1.0*	*< 1.0*	*< 1.0*	*< 1.0*	*< 1.0*	*< 1.0*	*< 1.0*	*< 1.0*	*< 1.0*	*< 1.0*	*< 1.0*	*< 1.0*	*< 1.0*
1,1-Dichloroethane	70	*< 1.0*	2.0	*< 1.0*	*< 1.0*	*< 1.0*	*< 1.0*	*< 1.0*	*< 1.0*	*< 1.0*	*< 1.0*	*< 1.0*	*< 1.0*	*< 1.0*	*< 1.0*	*< 1.0*	*< 1.0*	*< 1.0*
1,1-Dichloroethene	**7**	*< 1.0*	*< 1.0*	*< 1.0*	*< 1.0*	*< 1.0*	*< 1.0*	*< 1.0*	*< 1.0*	*< 1.0*	*< 1.0*	*< 1.0*	*< 1.0*	*< 1.0*	*< 1.0*	*< 1.0*	*< 1.0*	*< 1.0*
1,2-Dichlorobenzene	600	*< 1.0*	1.4	*< 1.0*	*< 1.0*	*< 1.0*	*< 1.0*	*< 1.0*	*< 1.0*	*< 1.0*	*< 1.0*	*< 1.0*	*< 1.0*	2.0	*< 1.0*	*< 1.0*	*< 1.0*	*< 1.0*
1,4-Dichlorobenzene	5	*< 1.0*	*< 1.0*	*< 1.0*	*< 1.0*	*< 1.0*	*< 1.0*	*< 1.0*	*< 1.0*	*< 1.0*	*< 1.0*	*< 1.0*	*< 1.0*	1.0	*< 1.0*	*< 1.0*	*< 1.0*	*< 1.0*
1,4-Dioxane	3	*< 50*	*< 50*	*< 50*	*< 50*	*< 50*	*< 50*	*< 50*	*< 50*	*< 50*	*< 50*	*< 50*	*< 50*	*< 50*	*< 50*	*< 50*	*< 50*	*< 50*
Benzene	5	*< 1.0*	*< 1.0*	*< 1.0*	*< 1.0*	*< 1.0*	*< 1.0*	*< 1.0*	*< 1.0*	*< 1.0*	*< 1.0*	*< 1.0*	*< 1.0*	1.5	*< 1.0*	*< 1.0*	*< 1.0*	*< 1.0*
Chloroform	70	*< 1.0*	*< 1.0*	*< 1.0*	*< 1.0*	*< 1.0*	*< 1.0*	*< 1.0*	*< 1.0*	*< 1.0*	*< 1.0*	*< 1.0*	*< 1.0*	*< 1.0*	*< 1.0*	*< 1.0*	*< 1.0*	*< 1.0*
cis-1,2-Dichloroethene	70	*< 1.0*	*< 1.0*	*< 1.0*	*< 1.0*	11	*< 1.0*	*< 1.0*	3.2	*< 1.0*	3.2	*< 1.0*	*< 1.0*	2.2	1.1	*< 1.0*	9.7	*< 1.0*
Methyl tert-butyl ether	**70**	*< 1.0*	**250**	*< 1.0*	*< 1.0*	*< 1.0*	*< 1.0*	*< 1.0*	*< 1.0*	*< 1.0*	*< 1.0*	*< 1.0*	*< 1.0*	*< 1.0*	*< 1.0*	*< 1.0*	*< 1.0*	*< 1.0*
Naphthalene	140	*< 5.0*	*< 5.0*	*< 5.0*	*< 5.0*	*< 5.0*	*< 5.0*	*< 5.0*	*< 5.0*	*< 5.0*	*< 5.0*	*< 5.0*	*< 5.0*	*< 5.0*	*< 5.0*	*< 5.0*	*< 5.0*	*< 5.0*
Tert-amyl methyl ether	NS	*< 5.0*	86	*< 5.0*	*< 5.0*	*< 5.0*	*< 5.0*	*< 5.0*	*< 5.0*	*< 5.0*	*< 5.0*	*< 5.0*	*< 5.0*	*< 5.0*	*< 5.0*	*< 5.0*	*< 5.0*	*< 5.0*
Tetrachloroethene	5	*< 1.0*	*< 1.0*	*< 1.0*	*< 1.0*	*< 1.0*	*< 1.0*	*< 1.0*	*< 1.0*	*< 1.0*	1.2	*< 1.0*	*< 1.0*	*< 1.0*	*< 1.0*	*< 1.0*	*< 1.0*	*< 1.0*
Trichloroethene	**5**	1.9	**6.4**	*< 1.0*	*< 1.0*	**8.2**	*< 1.0*	*< 1.0*	4.4	*< 1.0*	**17**	*< 1.0*	4.0	1.9	**7.1**	*< 1.0*	**19**	*< 1.0*

Notes:
< = Compound not detected. Reportable detection limit shown.
Empty cells = Not analyzed
NS = No Standard
N = Normal Environmental Sample
FD = Field Duplicate Sample
Units are in µg/L = micrograms per liter

Qualifiers - Organic:
U* = Undetected; LCS or LCSD exceeds the control limits.

MA-GW-1 = Massachusetts Contingency Plan, 310 CMR 40, Method 1 Groundwater Standards, Category GW-1.

Table 4
Groundwater Analytical Summary Table
Southern Area
Former Raytheon Facility
Wayland, Massachusetts

Analyte	Location ID Sample Date Sample Type GW-1	MW-1014 22-Mar-13 N	MW-1015D 20-Mar-13 N	MW-1016D 22-Mar-13 N	MW-1017D 19-Mar-13 N	MW-1018 19-Mar-13 N	MW-1019B 19-Mar-13 N	MW-1020 19-Mar-13 N	MW-1022 20-Mar-13 N	MW-1022 20-Mar-13 FD	MW-1023 20-Mar-13 N	MW-1024D 22-Mar-13 N	MW-1025D 21-Mar-13 N	MW-1025M 20-Mar-13 N	MW-1026D 22-Mar-13 N	MW-1027 20-Mar-13 N	MW-1028 20-Mar-13 N	MW-1030 20-Mar-13 N	MW-1031 21-Mar-13 N
Method EPA522, µg/L																			
1,4-Dioxane	**3**							0.60	< 0.20		0.65	0.40	0.31		0.43				
Method SW8260B_SIM, µg/L																			
1,4-Dioxane	**3**								< 1.6		< 1.6	< 1.6	< 1.6	**6.1**	< 1.6				
Method SW8260C, µg/L																			
1,1,1-Trichloroethane	200	< 1.0	< 1.0	< 1.0	< 1.0	94	< 1.0	2.1	< 1.0	< 1.0	< 1.0	< 1.0	< 1.0	14	< 1.0	< 1.0	< 1.0	4.1	< 1.0
1,1-Dichloroethane	70	< 1.0	< 1.0	< 1.0	< 1.0	< 1.0	< 1.0	< 1.0	< 1.0	< 1.0	< 1.0	< 1.0	< 1.0	4.5	< 1.0	< 1.0	< 1.0	< 1.0	< 1.0
1,1-Dichloroethene	**7**	< 1.0	< 1.0	< 1.0	< 1.0	**7.3**	< 1.0	< 1.0	< 1.0	< 1.0	< 1.0	< 1.0	< 1.0	6.6	< 1.0	< 1.0	< 1.0	2.4	< 1.0
1,2-Dichlorobenzene	600	< 1.0	< 1.0	< 1.0	< 1.0	< 1.0	< 1.0	< 1.0	< 1.0	< 1.0	< 1.0	< 1.0	< 1.0	< 1.0	< 1.0	< 1.0	< 1.0	< 1.0	< 1.0
1,4-Dichlorobenzene	5	< 1.0	< 1.0	< 1.0	< 1.0	< 1.0	< 1.0	< 1.0	< 1.0	< 1.0	< 1.0	< 1.0	< 1.0	< 1.0	< 1.0	< 1.0	< 1.0	< 1.0	< 1.0
1,4-Dioxane	3	< 50	< 50	< 50	< 50	< 50	< 50	< 50	< 50	< 50	< 50	< 50	< 50	< 50	< 50	< 50	< 50	< 50	< 50
Benzene	5	< 1.0	< 1.0	< 1.0	< 1.0	< 1.0	< 1.0	< 1.0	< 1.0	< 1.0	< 1.0	< 1.0	< 1.0	< 1.0	< 1.0	< 1.0	< 1.0	< 1.0	< 1.0
Chloroform	70	< 1.0	1.5	< 1.0	< 1.0	< 1.0	< 1.0	< 1.0	< 1.0	< 1.0	< 1.0	< 1.0	< 1.0	< 1.0	< 1.0	< 1.0	< 1.0	< 1.0	< 1.0
cis-1,2-Dichloroethene	70	< 1.0	2.0	4.1	8.1	1.5	5.9	< 1.0	1.0	1.1	6.6	13	17	2.4	2.4	< 1.0	1.6	< 1.0	< 1.0
Methyl tert-butyl ether	**70**	< 1.0	< 1.0	< 1.0	< 1.0	7.6	< 1.0	11	< 1.0	< 1.0	< 1.0	< 1.0	< 1.0	23	< 1.0	< 1.0	< 1.0	12	1.1
Naphthalene	140	< 5.0	< 5.0	< 5.0	< 5.0	< 5.0	< 5.0	< 5.0	< 5.0	< 5.0	< 5.0	< 5.0	< 5.0	< 5.0	< 5.0	< 5.0	< 5.0	< 5.0	< 5.0
Tert-amyl methyl ether	NS	< 5.0	< 5.0	< 5.0	< 5.0	< 5.0	< 5.0	< 5.0	< 5.0	< 5.0	< 5.0	< 5.0	< 5.0	< 5.0	< 5.0	< 5.0	< 5.0	< 5.0	< 5.0
Tetrachloroethene	5	< 1.0	3.4	< 1.0	< 1.0	< 1.0	< 1.0	< 1.0	< 1.0	< 1.0	< 1.0	< 1.0	< 1.0	< 1.0	< 1.0	< 1.0	< 1.0	< 1.0	< 1.0
Trichloroethene	**5**	4.0	**34**	**28**	**41**	**300**	**26**	**16**	2.7	2.9	**38**	**73**	**110**	**170**	**19**	< 1.0	**6.8**	**23**	2.3

Notes:
< = Compound not detected. Reportable detection limit
Empty cells = Not analyzed
NS = No Standard
N = Normal Environmental Sample
FD = Field Duplicate Sample
Units are in µg/L = micrograms per liter

Qualifiers - Organic:
U* = Undetected; LCS or LCSD exceeds the control limit

MA-GW-1 = Massachusetts Contingency Plan, 310 CMR

Table 4
Groundwater Analytical Summary Table
Southern Area
Former Raytheon Facility
Wayland, Massachusetts

Analyte	Location ID Sample Date Sample Type GW-1	MW-1032 19-Mar-13 N	MW-1032 19-Mar-13 FD	MW-1033 20-Mar-13 N	MW-1033 20-Mar-13 FD	MW-1034 20-Mar-13 N
Method EPA522, µg/L						
1,4-Dioxane	**3**			**3.4**		0.59
Method SW8260B_SIM, µg/L						
1,4-Dioxane	**3**			**4.7**		*< 1.6*
Method SW8260C, µg/L						
1,1,1-Trichloroethane	200	*< 1.0*	*< 1.0*	*< 1.0*	*< 1.0*	*< 1.0*
1,1-Dichloroethane	70	1.3	1.3	*< 1.0*	*< 1.0*	*< 1.0*
1,1-Dichloroethene	**7**	1.7	1.6	1.5	1.4	*< 1.0*
1,2-Dichlorobenzene	600	*< 1.0*	*< 1.0*	*< 1.0*	*< 1.0*	*< 1.0*
1,4-Dichlorobenzene	5	*< 1.0*	*< 1.0*	*< 1.0*	*< 1.0*	*< 1.0*
1,4-Dioxane	3	*< 50*	*< 50*	*< 50*	*< 50*	*< 50*
Benzene	5	*< 1.0*	*< 1.0*	*< 1.0*	*< 1.0*	*< 1.0*
Chloroform	70	*< 1.0*	*< 1.0*	*< 1.0*	*< 1.0*	*< 1.0*
cis-1,2-Dichloroethene	70	*< 1.0*	*< 1.0*	1.8	1.8	16
Methyl tert-butyl ether	**70**	**86**	**85**	*< 1.0*	*< 1.0*	*< 1.0*
Naphthalene	140	*< 5.0*	*< 5.0*	*< 5.0*	*< 5.0*	*< 5.0*
Tert-amyl methyl ether	NS	18	18	*< 5.0*	*< 5.0*	*< 5.0*
Tetrachloroethene	5	*< 1.0*	*< 1.0*	*< 1.0*	*< 1.0*	*< 1.0*
Trichloroethene	**5**	**12**	**11**	**14**	**13**	**39**

Notes:
< = Compound not detected. Reportable detection limit s
Empty cells = Not analyzed
NS = No Standard
N = Normal Environmental Sample
FD = Field Duplicate Sample
Units are in µg/L = micrograms per liter

Qualifiers - Organic:
U* = Undetected; LCS or LCSD exceeds the control limit

MA-GW-1 = Massachusetts Contingency Plan, 310 CMR

Figures

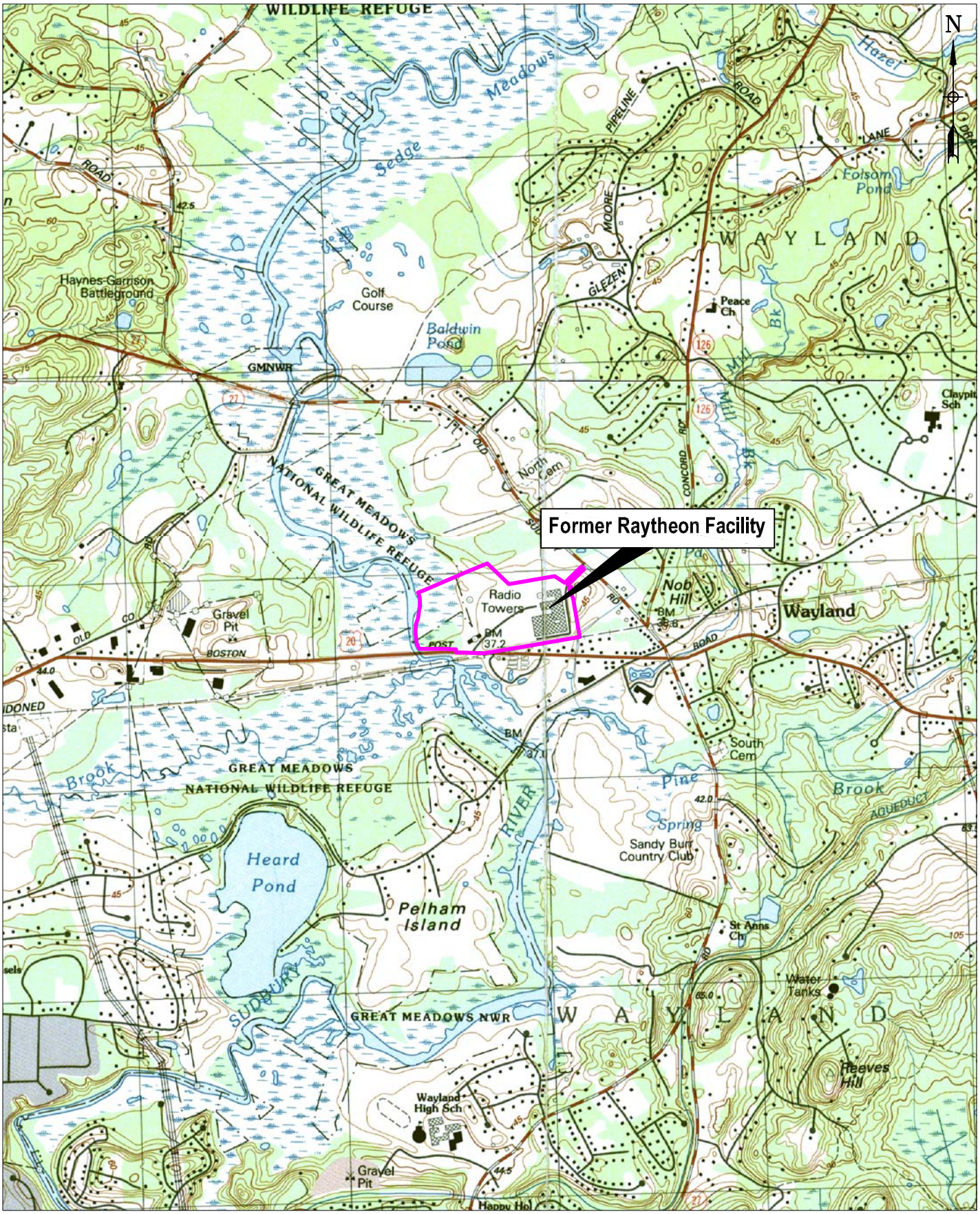

Legend

Former Raytheon Facility Property Boundary

Scale = 1:25,000

Figure 1 - Site Locus Map
Former Raytheon Facility
and Former Hamlen Parcel - Wayland, MA

ERM

R:\Raytheon\Wayland - 1922\Raytheon ROS\ROS Locus.dwg (05/24/2005 - 11:50am Boston)

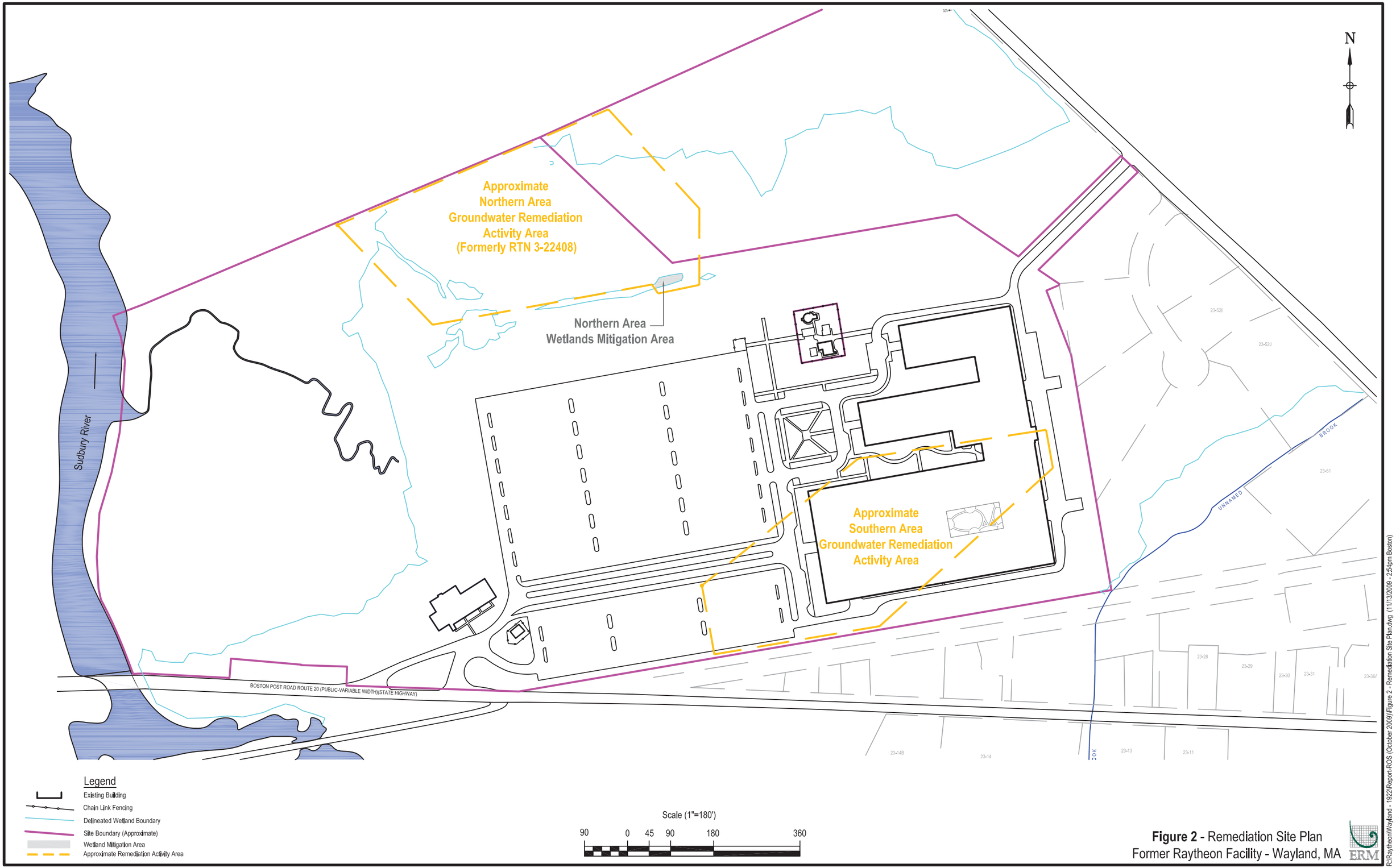

Figure 2 - Remediation Site Plan
Former Raytheon Facility - Wayland, MA

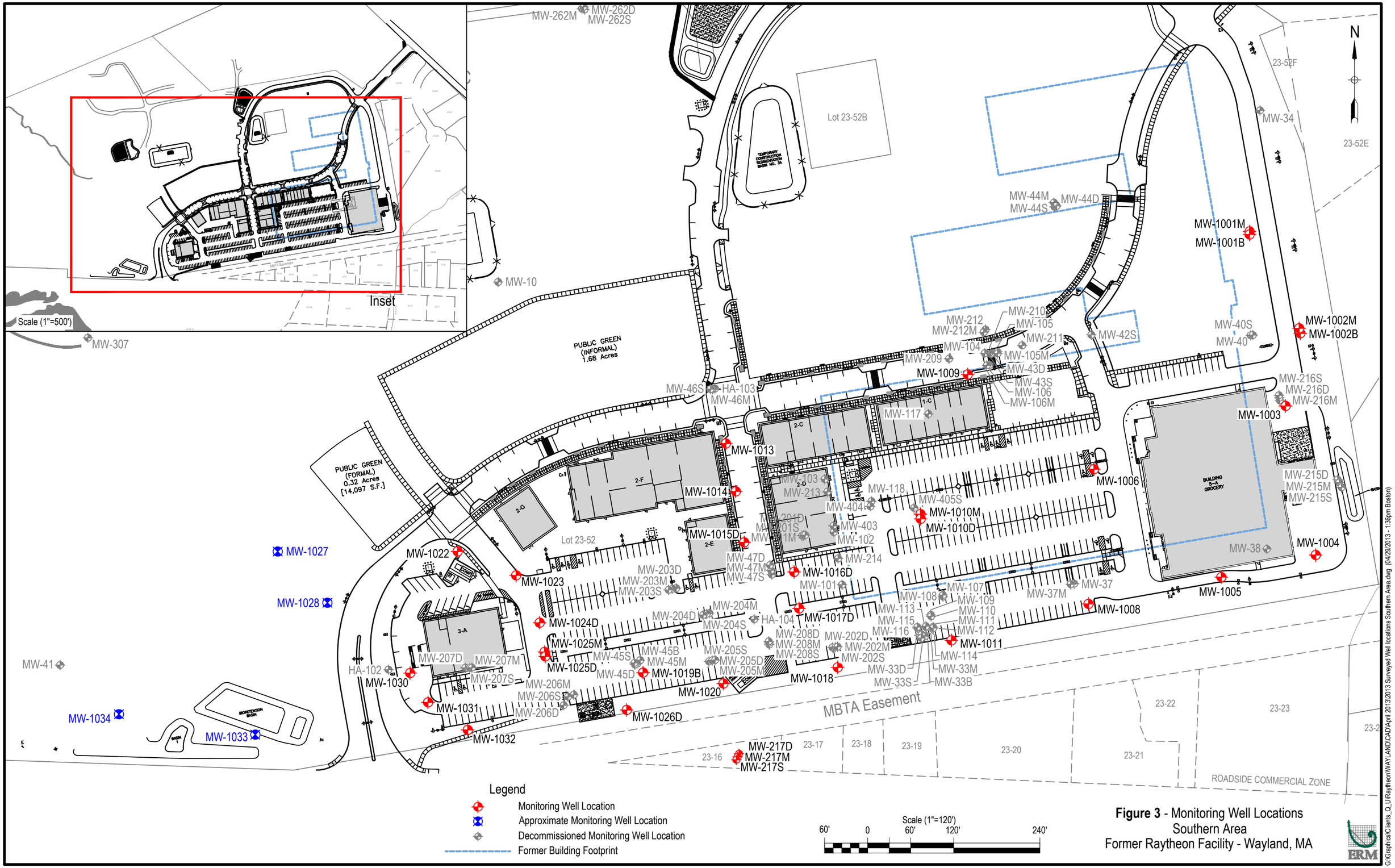

Figure 3 - Monitoring Well Locations
Southern Area
Former Raytheon Facility - Wayland, MA

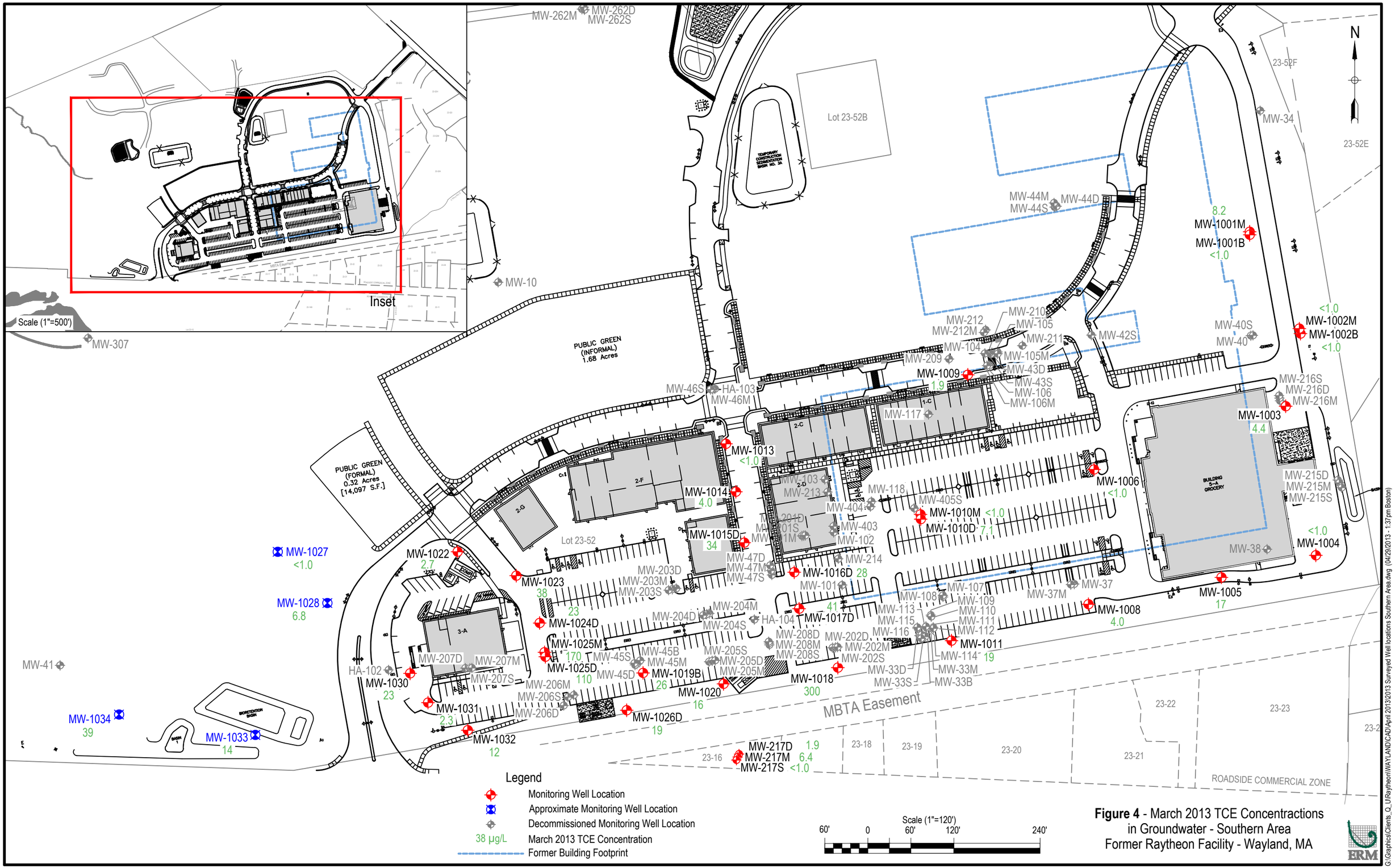

Figure 4 - March 2013 TCE Concentractions in Groundwater - Southern Area
Former Raytheon Facility - Wayland, MA

Appendix A
BWSC Forms

Massachusetts Department of Environmental Protection
Bureau of Waste Site Cleanup

BWSC108

Release Tracking Number
3 - 13302

COMPREHENSIVE RESPONSE ACTION TRANSMITTAL FORM & PHASE I COMPLETION STATEMENT

Pursuant to 310 CMR 40.0484 (Subpart D) and 40.0800 (Subpart H)

A. SITE LOCATION:

1. Site Name: **RAYTHEON COMPANY**
2. Street Address: **430 BOSTON POST RD**
3. City/Town: **WAYLAND** 4. ZIP Code: **017780000**

☑ 5. Check here if a Tier Classification Submittal has been provided to DEP for this disposal site.

☐ a. Tier IA ☑ b. Tier IB ☐ c. Tier IC ☐ d. Tier II

6. If applicable, provide the Permit Number: **133939 & W045278**

B. THIS FORM IS BEING USED (check all that apply)

☐ 1. Submit a **Phase I Completion Statement**, pursuant to 310 CMR 40.0484.

☐ 2. Submit a **Revised Phase I Completion Statement**, pursuant to 310 CMR 40.0484.

☐ 3. Submit a **Phase II Scope of Work**, pursuant to 310 CMR 40.0834.

☐ 4. Submit an **interim Phase II Report**. This report does not satisfy the response action deadline requirements in 310 CMR 40.0500.

☐ 5. Submit a **final Phase II Report and Completion Statement**, pursuant to 310 CMR 40.0836.

☐ 6. Submit a **Revised Phase II Report and Completion Statement**, pursuant to 310 CMR 40.0836.

☐ 7. Submit a **Phase III Remedial Action Plan and Completion Statement**, pursuant to 310 CMR 40.0862.

☐ 8. Submit a **Revised Phase III Remedial Action Plan and Completion Statement**, pursuant to 310 CMR 40.0862.

☐ 9. Submit a **Phase IV Remedy Implementation Plan**, pursuant to 310 CMR 40.0874.

☐ 10. Submit a **Modified Phase IV Remedy Implementation Plan**, pursuant to 310 CMR 40.0874.

☐ 11. Submit an **As-Built Construction Report**, pursuant to 310 CMR 40.0875.

☐ 12. Submit a **Phase IV Status Report**, pursuant to 310 CMR 40.0877.

☐ 13. Submit a **Phase IV Completion Statement**, pursuant to 310 CMR 40.0878 and 40.0879.

Specify the outcome of Phase IV activities: (check one)

☐ a. Phase V Operation, Maintenance or Monitoring of the Comprehensive Remedial Action is necessary to achieve a Response Action Outcome.

☐ b. The requirements of a Class A Response Action Outcome have been met. No additional Operation, Maintenance or Monitoring is necessary to ensure the integrity of the Response Action Outcome. A completed Response Action Outcome Statement and Report (BWSC104) will be submitted to DEP.

☐ c. The requirements of a Class C Response Action Outcome have been met. No additional Operation, Maintenance or Monitoring is necessary to ensure the integrity of the Response Action Outcome. A completed Response Action Outcome Statement and Report (BWSC104) has been or will be submitted to DEP.

☐ d. The requirements of a Class C Response Action Outcome have been met. Further Operation, Maintenance or Monitoring of the remedial action is necessary to ensure that conditions are maintained and that further progress is made toward a Permanent Solution. A completed Response Action Outcome Statement and Report (BWSC104) has been or will be submitted to DEP.

Massachusetts Department of Environmental Protection
Bureau of Waste Site Cleanup

BWSC108

Release Tracking Number
3 - 13302

COMPREHENSIVE RESPONSE ACTION TRANSMITTAL FORM & PHASE I COMPLETION STATEMENT

Pursuant to 310 CMR 40.0484 (Subpart D) and 40.0800 (Subpart H)

B. THIS FORM IS BEING USED TO (cont.):(check all that apply)

☐ 14. Submit a **Revised Phase IV Completion Statement**, pursuant to 310 CMR 40.0878 and 40.0879.

☐ 15. Submit a **Phase V Status Report**, pursuant to 310 CMR 40.0892.

☑ 16. Submit a **Remedial Monitoring Report**. (This report can only be submitted through eDEP.)

a. Type of Report: (check one) ☐ i. Initial Report ☑ ii. Interim Report ☐ iii. Final Report

b. Frequency of Submittal: (check all that apply)

☐ i. A Remedial Monitoring Report(s) submitted monthly to address an Imminent Hazard.

☐ ii. A Remedial Monitoring Report(s) submitted monthly to address a Condition of Substantial Release Migration.

☑ iii. A Remedial Monitoring Report(s) submitted concurrent with a Status Report.

c. Status of Site: (check one) ☐ i. Phase IV ☐ ii. Phase V ☑ iii. Remedy Operation Status ☐ iv. Class C RAO

d. Number of Remedial Systems and/or Monitoring Programs: 2

A separate BWSC108A, CRA Remedial Monitoring Report, must be filled out for each Remedial System and/or Monitoring Program addressed by this transmittal form.

☐ 17. Submit a **Remedy Operation Status**, pursuant to 310 CMR 40.0893.

☑ 18. Submit a **Status Report to maintain a Remedy Operation Status**, pursuant to 310 CMR 40.0893(2).

☐ 19. Submit a **Transfer and/or a Modification of Persons Maintaining a Remedy Operation Status (ROS)**, pursuant to 310 CMR 40.0893(5) (check one, or both, if applicable).

☐ a. Submit a Transfer of Persons Maintaining an ROS (the transferee should be the person listed in Section D, "Person Undertaking Response Actions").

☐ b. Submit a Modification of Persons Maintaining an ROS (the primary representative should be the person listed in Section D, "Person Undertaking Response Actions").

c. Number of Persons Maintaining an ROS not including the primary representative: _____

☐ 20. Submit a **Termination of a Remedy Operation Status**, pursuant to 310 CMR 40.0893(6).(check one)

☐ a. Submit a notice indicating ROS performance standards have not been met. A plan and timetable pursuant to 310 CMR 40.0893(6)(b) for resuming the ROS are attached.

☐ b. Submit a notice of Termination of ROS.

☐ 21. Submit a **Phase V Completion Statement**, pursuant to 310 CMR 40.0894.

Specify the outcome of Phase V activities: (check one)

☐ a. The requirements of a Class A Response Action Outcome have been met. No additional Operation, Maintenance or Monitoring is necessary to ensure the integrity of the Response Action Outcome. A completed Response Action Outcome Statement (BWSC104) will be submitted to DEP.

☐ b. The requirements of a Class C Response Action Outcome have been met. No additional Operation, Maintenance or Monitoring is necessary to ensure the integrity of the Response Action Outcome. A completed Response Action Outcome Statement and Report (BWSC104) will be submitted to DEP.

☐ c. The requirements of a Class C Response Action Outcome have been met. Further Operation, Maintenance or Monitoring of the remedial action is necessary to ensure that conditions are maintained and/or that further progress is made toward a Permanent Solution. A completed Response Action Outcome Statement and Report (BWSC104) will be submitted to DEP.

☐ 22. Submit a **Revised Phase V Completion Statement**, pursuant to 310 CMR 40.0894.

☐ 23. Submit a **Post-Class C Response Action Outcome Status Report**, pursuant to 310 CMR 40.0898.

Massachusetts Department of Environmental Protection
Bureau of Waste Site Cleanup

BWSC108

COMPREHENSIVE RESPONSE ACTION TRANSMITTAL FORM & PHASE I COMPLETION STATEMENT

Release Tracking Number
3 - 13302

Pursuant to 310 CMR 40.0484 (Subpart D) and 40.0800 (Subpart H)

C. LSP SIGNATURE AND STAMP:

I attest under the pains and penalties of perjury that I have personally examined and am familiar with this transmittal form, including any and all documents accompanying this submittal. In my professional opinion and judgment based upon application of (i) the standard of care in 309 CMR 4.02(1), (ii) the applicable provisions of 309 CMR 4.02(2) and (3), and 309 CMR 4.03(2), and (iii) the provisions of 309 CMR 4.03(3), to the best of my knowledge, information and belief,

> *if Section B indicates that a* ***Phase I, Phase II, Phase III, Phase IV or Phase V Completion Statement*** *and/or a* ***Termination of a Remedy Operation Status*** *is being submitted*, the response action(s) that is (are) the subject of this submittal (i) has (have) been developed and implemented in accordance with the applicable provisions of M.G.L. c. 21E and 310 CMR 40.0000, (ii) is (are) appropriate and reasonable to accomplish the purposes of such response action(s) as set forth in the applicable provisions of M.G.L. c. 21E and 310 CMR 40.0000, and (iii) comply(ies) with the identified provisions of all orders, permits, and approvals identified in this submittal;

> *if Section B indicates that a* ***Phase II Scope of Work*** *or a* ***Phase IV Remedy Implementation Plan*** *is being submitted*, the response action(s) that is (are) the subject of this submittal (i) has (have) been developed in accordance with the applicable provisions of M.G.L. c. 21E and 310 CMR 40.0000, (ii) is (are) appropriate and reasonable to accomplish the purposes of such response action(s) as set forth in the applicable provisions of M.G.L. c. 21E and 310 CMR 40.0000, and (iii) comply(ies) with the identified provisions of all orders, permits, and approvals identified in this submittal;

> *if Section B indicates that an* ***As-Built Construction Report****, a* ***Remedy Operation Status****, a* ***Phase IV, Phase V or Post-Class C RAO Status Report,*** *a* ***Status Report to Maintain a Remedy Operation Status,*** *a* ***Transfer or Modification of Persons Maintaining a Remedy Operation Status*** *and/or a* ***Remedial Monitoring Report*** *is being submitted*, the response action(s) that is (are) the subject of this submittal (i) is (are) being implemented in accordance with the applicable provisions of M.G.L. c. 21E and 310 CMR 40.0000, (ii) is (are) appropriate and reasonable to accomplish the purposes of such response action(s) as set forth in the applicable provisions of M.G.L. c. 21E and 310 CMR 40.0000, and (iii) comply(ies) with the identified provisions of all orders, permits, and approvals identified in this submittal.

I am aware that significant penalties may result, including, but not limited to, possible fines and imprisonment, if I submit information which I know to be false, inaccurate or materially incomplete.

1. LSP #: 2196
2. First Name: JOHN C
3. Last Name: DROBINSKI
4. Telephone: 6176467800
5. Ext.:
6. FAX: 6172676447
7. Signature: John C Drobinski
8. Date: 5/16/2013 (mm/dd/yyyy)
9. LSP Stamp:

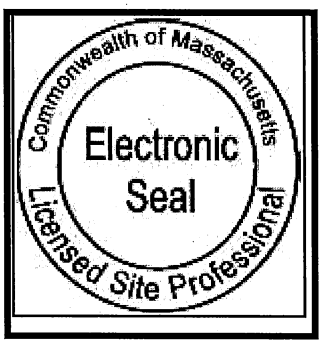

Massachusetts Department of Environmental Protection
Bureau of Waste Site Cleanup

BWSC108

Release Tracking Number

3 - 13302

COMPREHENSIVE RESPONSE ACTION TRANSMITTAL FORM & PHASE I COMPLETION STATEMENT

Pursuant to 310 CMR 40.0484 (Subpart D) and 40.0800 (Subpart H)

D. PERSON UNDERTAKING RESPONSE ACTIONS:

1. Check all that apply: ☐ a. change in contact name ☐ b. change of address ☐ c. change in the person undertaking response actions

2. Name of Organization: RAYTHEON COMPANY

3. Contact First Name: LOUIS J 4. Last Name: BURKHARDT

5. Street: 880 TECHNOLOGY PARK DR MS T303 6. Title: EH&S MANAGER

7. City/Town: BILLERICA 8. State: MA 9. ZIP Code: 018210000

10. Telephone: 9784368238 11. Ext.: 12. FAX: 9784368581

E. RELATIONSHIP TO SITE OF PERSON UNDERTAKING RESPONSE ACTIONS: ☐ Check here to change relationship

☑ 1. RP or PRP ☐ a. Owner ☑ b. Operator ☐ c. Generator ☐ d. Transporter

☐ e. Other RP or PRP Specify:

☐ 2. Fiduciary, Secured Lender or Municipality with Exempt Status (as defined by M.G.L. c. 21E, s. 2)

☐ 3. Agency or Public Utility on a Right of Way (as defined by M.G.L. c. 21E, s. 5(j))

☐ 4. Any Other Person Undertaking Response Actions Specify Relationship:

F. REQUIRED ATTACHMENT AND SUBMITTALS:

☐ 1. Check here if the Response Action(s) on which this opinion is based, if any, are (were) subject to any order(s), permit(s) and/or approval(s) issued by DEP or EPA. If the box is checked, you MUST attach a statement identifying the applicable provisions thereof.

☐ 2. Check here to certify that the Chief Municipal Officer and the Local Board of Health have been notified of the submittal of any Phase Reports to DEP.

☐ 3. Check here to certify that the Chief Municipal Officer and the Local Board of Health have been notified of the availability of a Phase III Remedial Action Plan.

☐ 4. Check here to certify that the Chief Municipal Officer and the Local Board of Health have been notified of the availability of a Phase IV Remedy Implementation Plan.

☐ 5. Check here to certify that the Chief Municipal Officer and the Local Board of Health have been notified of any field work involving the implementation of a Phase IV Remedial Action.

☐ 6. If submitting a Transfer of a Remedy Operation Status (as per 310 CMR 40.0893(5)), check here to certify that a statement detailing the compliance history for the person making this submittal (transferee) is attached.

☐ 7. If submitting a Modification of a Remedy Operation Status (as per 310 CMR 40.0893(5)), check here to certify that a statement detailing the compliance history for each new person making this submittal is attached.

☐ 8. Check here if any non-updatable information provided on this form is incorrect, e.g. Site Name. Send corrections to: BWSC.eDEP@state.ma.us.

☑ 9. Check here to certify that the LSP Opinion containing the material facts, data, and other information is attached.

Massachusetts Department of Environmental Protection
Bureau of Waste Site Cleanup

BWSC108

Release Tracking Number
3 - 13302

COMPREHENSIVE RESPONSE ACTION TRANSMITTAL FORM & PHASE I COMPLETION STATEMENT

Pursuant to 310 CMR 40.0484 (Subpart D) and 40.0800 (Subpart H)

G. CERTIFICATION OF PERSON UNDERTAKING RESPONSE ACTIONS:

1. I, **Louis Burkhardt**, attest under the pains and penalties of perjury (i) that I have personally examined and am familiar with the information contained in this submittal, including any and all documents accompanying this transmittal form, (ii) that, based on my inquiry of those individuals immediately responsible for obtaining the information, the material information contained in this submittal is, to the best of my knowledge and belief, true, accurate and complete, and (iii) that I am fully authorized to make this attestation on behalf of the entity legally responsible for this submittal. I/the person or entity on whose behalf this submittal is made am/is aware that there are significant penalties, including, but not limited to, possible fines and imprisonment, for willfully submitting false, inaccurate, or incomplete information.

>*if Section B indicates that this is a* **Modification of a Remedy Operation Status (ROS)**, I attest under the pains and penalties of perjury that I am fully authorized to act on behalf of all persons performing response actions under the ROS as stated in 310 CMR 40.0893(5)(d) to receive oral and written correspondence from MassDEP with respect to performance of response actions under the ROS, and to receive a statement of fee amount as per 4.03(3).

I understand that any material received by the Primary Representative from MassDEP shall be deemed received by all the persons perform ing response actions under the ROS, and I am aware that there are significant penalties, including, but not limited to, possible fines and imprisonment, for willfully submitting false, inaccurate or incomplete information.

2. By: **Louis Burkhardt** (Signature)
3. Title: **EH&S MANAGER**
4. For: **RAYTHEON COMPANY** (Name of person or entity recorded in Section D)
5. Date: **5/16/2013** (mm/dd/yyyy)

☐ 6. Check here if the address of the person providing certification is different from address recorded in Section D.

7. Street: _____

8. City/Town: _____ 9. State: _____ 10. ZIP Code: _____

11. Telephone: _____ 12. Ext.: _____ 13. FAX: _____

YOU ARE SUBJECT TO AN ANNUAL COMPLIANCE ASSURANCE FEE OF UP TO $10,000 PER BILLABLE YEAR FOR THIS DISPOSAL SITE. YOU MUST LEGIBLY COMPLETE ALL RELEVANT SECTIONS OF THIS FORM OR DEP MAY RETURN THE DOCUMENT AS INCOMPLETE. IF YOU SUBMIT AN INCOMPLETE FORM, YOU MAY BE PENALIZED FOR MISSING A REQUIRED DEADLINE.

Date Stamp (DEP USE ONLY:)

Received by DEP on

5/16/2013 6:39:02 PM

Massachusetts Department of Environmental Protection
Bureau of Waste Site Cleanup

BWSC108A

CRA REMEDIAL MONITORING REPORT

Pursuant to 310 CMR 40.0800 (SUBPART H)

Remedial System or Monitoring Program: 1 of: 2

Release Tracking Number: 3 - 13302

A. DESCRIPTION OF ACTIVE REMEDIAL SYSTEM OR ACTIVE REMEDIAL MONITORING PROGRAM:

1. Type of Active Remedial System or Active Remedial Monitoring Program: (check all that apply)

- [x] a. Active Remedial System: (check all that apply)
  - [ ] i. NAPL Recovery
  - [ ] ii. Soil Vapor Extraction/Bioventing
  - [ ] iii. Vapor-phase Carbon Adsorption
  - [x] iv. Groundwater Recovery
  - [ ] v. Dual/Multi-phase Extraction
  - [ ] vi. Aqueous-phase Carbon Adsorption
  - [ ] vii. Air Stripping
  - [ ] viii. Sparging/Biosparging
  - [ ] ix. Cat/Thermal Oxidation
  - [ ] x. Other Describe:
- [x] b. Application of Remedial Additives: (check all that apply)
  - [ ] i. To the Subsurface
  - [x] ii. To Groundwater (Injection)
  - [ ] iii. To the Surface
- [ ] c. Active Remedial Monitoring Program Without the Application of Remedial Additives: (check all that apply; Sections C, D and E are not required; attach supporting information, data, maps and/or sketches needed by checking Section F5)
  - [ ] i. Reactive Wall
  - [ ] ii. Natural Attenuation
  - [ ] iii. Other Describe:

2. Mode of Operation: (check one)

- [x] a. Continuous
- [ ] b. Intermittent
- [ ] c. Pulsed
- [ ] d. One-time Event Only
- [ ] e. Other:

3. System Effluent/Discharge: (check all that apply)

- [ ] a. Sanitary Sewer/POTW
- [x] b. Groundwater Re-infiltration/Re-injection: (check one)
  - [ ] i. Downgradient
  - [x] ii. Upgradient
- [ ] c. Vapor-phase Discharge to Ambient Air: (check one)
  - [ ] i. Off-gas Controls
  - [ ] ii. No Off-gas Controls
- [ ] d. Drinking Water Supply
- [ ] e. Surface Water (including Storm Drains)
- [ ] f. Other Describe:

B. MONITORING FREQUENCY:

1. Reporting period that is the subject of this submittal: From: 11/1/2012 (mm/dd/yyyy) To: 4/1/2013 (mm/dd/yyyy)

2. Number of monitoring events during the reporting period: (check one)

- [ ] a. System Startup: (if applicable)
  - [ ] i. Days 1, 3, 6, and then weekly thereafter, for the first month.
  - [ ] ii. Other Describe:
- [x] b. Post-system Startup (after first month) or Monitoring Program:
  - [ ] i. Monthly
  - [x] ii. Quarterly
  - [ ] iii. Other Describe:

[x] 3. Check here to certify that the number of required monitoring events were conducted during the reporting period.

C. EFFLUENT/DISCHARGE REGULATION: (check one to indicate how the effluent/discharge limits were established)

- [ ] 1. NPDES: (check one)
  - [ ] a. Remediation General Permit
  - [ ] b. Individual Permit
  - [ ] c. Emergency Exclusion
  - Effective Date of Permit: (mm/dd/yyyy)
- [x] 2. MCP Performance Standard MCP Citations(s): 310 CMR 40.0045(4)
- [ ] 3. DEP Approval Letter Date of Letter: (mm/dd/yyyy)
- [ ] 4. Other Describe:

Massachusetts Department of Environmental Protection
Bureau of Waste Site Cleanup

BWSC108 A

CRA REMEDIAL MONITORING REPORT

Pursuant to 310 CMR 40.0800 (SUBPART H)

Remedial System or Monitoring Program: 1 of: 2

Release Tracking Number: 3 - 13302

D. WASTEWATER TREATMENT PLANT OPERATOR: (check one)

☐ 1. Required due to Remedial Wastewater Treatment Plant in place for more than 30 days.

a. Name: b. Grade:

c. License No.: d. License Exp. Date: (mm/dd/yyyy)

☐ 2. Not Required

☑ 3. Not Applicable

E. STATUS OF ACTIVE REMEDIAL SYSTEM OR ACTIVE REMEDIAL MONITORING PROGRAM DURING REPORTING PERIOD: (check all that apply)

☑ 1. The Active Remedial System was functional one or more days during the Reporting Period.

a. Days System was Fully Functional: 152 b. GW Recovered (gals): 1371800

c. NAPL Recovered (gals): d. GW Discharged (gals): 1371800

e. Avg. Soil Gas Recovery Rate (scfm): f. Avg. Sparging Rate (scfm) :

☑ 2. Remedial Additives: (check all that apply)

☐ a. No Remedial Additives applied during the Reporting Period.

☑ b. Enhanced Bioremediation Additives applied: (total quantity applied at the site for the current reporting period)

☐ i. Nitrogen/Phosphorus:

Name of Additive	Date	Quantity	Units

☐ ii. Peroxides:

Name of Additive	Date	Quantity	Units

☑ iii. Microorganisms:

Name of Additive	Date	Quantity	Units
BIOAUGMENT CULTURE	12/11/2012	425	LBS

☑ iv. Other:

Name of Additive	Date	Quantity	Units
METHANOL	11/28/2012	10595	LBS
METHANOL	12/5/2012	10595	LBS

☐ c. Chemical oxidation/reduction additives applied: (total quantity applied at the site for the current reporting period)

☐ i. Permanganates:

Name of Additive	Date	Quantity	Units

☐ ii. Peroxides:

Name of Additive	Date	Quantity	Units

☐ iii. Persulfates:

Name of Additive	Date	Quantity	Units

☐ iv. Other:

Name of Additive	Date	Quantity	Units

Massachusetts Department of Environmental Protection
Bureau of Waste Site Cleanup

BWSC108A

CRA REMEDIAL MONITORING REPORT

Pursuant to 310 CMR 40.0800 (SUBPART H)

Release Tracking Number 3 - 13302

Remedial System or Monitoring Program: 1 of: 2

E. STATUS OF ACTIVE REMEDIAL SYSTEM OR ACTIVE REMEDIAL MONITORING PROGRAM DURING REPORTING PERIOD: (cont.) (check all that apply)

☐ d. Other additives applied: (total quantity applied at the site for the current reporting period)

Name of Additive	Date	Quantity	Units

Name of Additive	Date	Quantity	Units

☐ e. Check here if any additional Remedial Additives were applied. Attach list of additional additives and include Name of Additive, Date Applied, Quantity Applied and Units (in gals. or lbs.)

F. SHUTDOWNS OF ACTIVE REMEDIAL SYSTEM OR ACTIVE REMEDIAL MONITORING PROGRAM: (check all that apply)

☐ 1. The Active Remedial System had unscheduled shutdowns on one or more occasions during the Reporting Period.

a. Number of Unscheduled Shutdowns: _____ b. Total Number of Days of Unscheduled Shutdowns: _____

c. Reason(s) for Unscheduled Shutdowns: _____

☑ 2. The Active Remedial System had scheduled shutdowns on one or more occasions during the Reporting Period.

a. Number of Scheduled Shutdowns: 1 b. Total Number of Days of Scheduled Shutdowns: 30

c. Reason(s) for Scheduled Shutdowns: **CONSTRUCTION - EXPANSION OF ENHANCED ANAEROBIC DECHLORINATION SYSTEM**

☐ 3. The Active Remedial System or Active Remedial Monitoring Program was permanently shutdown/discontinued during the Reporting Period.

a. Date of Final System or Monitoring Program Shutdown: _____ (mm/dd/yyyy)

☐ b. No Further Effluent Discharges.

☐ c. No Further Application of Remedial Additives planned; sufficient monitoring completed to demonstrate compliance with 310 CMR 40.0046.

☐ d. No Further Submittals Planned.

☐ e. Other: Describe:

G. SUMMARY STATEMENTS: (check all that apply for the current reporting period)

☑ 1. All Active Remedial System checks and effluent analyses required by the approved plan and/or permit were performed when applicable.

☑ 2. There were no significant problems or prolonged (>25% of reporting period) unscheduled shutdowns of the Active Remedial System.

☑ 3. The Active Remedial System or Active Remedial Monitoring Program operated in conformance with the MCP, and all applicable approval conditions and/or permits.

4. Indicate any Operational Problems or Notes:

☐ 5. Check here if additional/supporting Information, data, maps, and/or sketches are attached to the form.

Massachusetts Department of Environmental Protection
Bureau of Waste Site Cleanup

BWSC108A

CRA REMEDIAL MONITORING REPORT

Pursuant to 310 CMR 40.0800 (SUBPART H)

Remedial System or Monitoring Program: 2 of: 2

Release Tracking Number: 3 - 13302

A. DESCRIPTION OF ACTIVE REMEDIAL SYSTEM OR ACTIVE REMEDIAL MONITORING PROGRAM:

1. Type of Active Remedial System or Active Remedial Monitoring Program: (check all that apply)

☐ a. Active Remedial System: (check all that apply)

☐ i. NAPL Recovery ☐ ii. Soil Vapor Extraction/Bioventing ☐ iii. Vapor-phase Carbon Adsorption
☐ iv. Groundwater Recovery ☐ v. Dual/Multi-phase Extraction ☐ vi. Aqueous-phase Carbon Adsorption
☐ vii. Air Stripping ☐ viii. Sparging/Biosparging ☐ ix. Cat/Thermal Oxidation
☐ x. Other Describe:

☑ b. Application of Remedial Additives: (check all that apply)

☐ i. To the Subsurface ☑ ii. To Groundwater (Injection) ☐ iii. To the Surface

☐ c. Active Remedial Monitoring Program Without the Application of Remedial Additives: (check all that apply; Sections C, D and E are not required; attach supporting information, data, maps and/or sketches needed by checking Section F5)

☐ i. Reactive Wall ☐ ii. Natural Attenuation ☐ iii. Other Describe:

2. Mode of Operation: (check one)

☐ a. Continuous ☑ b. Intermittent ☐ c. Pulsed ☐ d. One-time Event Only ☐ e. Other:

3. System Effluent/Discharge: (check all that apply)

☐ a. Sanitary Sewer/POTW
☐ b. Groundwater Re-infiltration/Re-injection: (check one) ☐ i. Downgradient ☐ ii. Upgradient
☐ c. Vapor-phase Discharge to Ambient Air: (check one) ☐ i. Off-gas Controls ☐ ii. No Off-gas Controls
☐ d. Drinking Water Supply
☐ e. Surface Water (including Storm Drains)
☑ f. Other Describe: NO EFFLUENT

B. MONITORING FREQUENCY:

1. Reporting period that is the subject of this submittal: From: 11/1/2012 (mm/dd/yyyy) To: 4/1/2013 (mm/dd/yyyy)

2. Number of monitoring events during the reporting period: (check one)

☐ a. System Startup: (if applicable)

☐ i. Days 1, 3, 6, and then weekly thereafter, for the first month.

☐ ii. Other Describe:

☑ b. Post-system Startup (after first month) or Monitoring Program:

☐ i. Monthly
☐ ii. Quarterly
☑ iii. Other Describe: SEMIANNUAL

☑ 3. Check here to certify that the number of required monitoring events were conducted during the reporting period.

C. EFFLUENT/DISCHARGE REGULATION: (check one to indicate how the effluent/discharge limits were established)

☐ 1. NPDES: (check one) ☐ a. Remediation General Permit ☐ b. Individual Permit
☐ c. Emergency Exclusion Effective Date of Permit: (mm/dd/yyyy)

☐ 2. MCP Performance Standard MCP Citations(s):

☐ 3. DEP Approval Letter Date of Letter: (mm/dd/yyyy)

☑ 4. Other Describe: NO EFFLUENT

Massachusetts Department of Environmental Protection
Bureau of Waste Site Cleanup

BWSC108 A

CRA REMEDIAL MONITORING REPORT

Pursuant to 310 CMR 40.0800 (SUBPART H)

Remedial System or Monitoring Program: 2 of: 2

Release Tracking Number: 3 - 13302

D. WASTEWATER TREATMENT PLANT OPERATOR: (check one)

☐ 1. Required due to Remedial Wastewater Treatment Plant in place for more than 30 days.

a. Name: _____ b. Grade: _____

c. License No.: _____ d. License Exp. Date: _____ (mm/dd/yyyy)

☐ 2. Not Required

☑ 3. Not Applicable

E. STATUS OF ACTIVE REMEDIAL SYSTEM OR ACTIVE REMEDIAL MONITORING PROGRAM DURING REPORTING PERIOD: (check all that apply)

☐ 1. The Active Remedial System was functional one or more days during the Reporting Period.

a. Days System was Fully Functional: _____ b. GW Recovered (gals): _____

c. NAPL Recovered (gals): _____ d. GW Discharged (gals): _____

e. Avg. Soil Gas Recovery Rate (scfm): _____ f. Avg. Sparging Rate (scfm) : _____

☑ 2. Remedial Additives: (check all that apply)

☑ a. No Remedial Additives applied during the Reporting Period.

☐ b. Enhanced Bioremediation Additives applied: (total quantity applied at the site for the current reporting period)

☐ i. Nitrogen/Phosphorus:

Name of Additive	Date	Quantity	Units

☐ ii. Peroxides:

Name of Additive	Date	Quantity	Units

☐ iii. Microorganisms:

Name of Additive	Date	Quantity	Units

☐ iv. Other:

Name of Additive	Date	Quantity	Units

☐ c. Chemical oxidation/reduction additives applied: (total quantity applied at the site for the current reporting period)

☐ i. Permanganates:

Name of Additive	Date	Quantity	Units

☐ ii. Peroxides:

Name of Additive	Date	Quantity	Units

☐ iii. Persulfates:

Name of Additive	Date	Quantity	Units

☐ iv. Other:

Name of Additive	Date	Quantity	Units

Massachusetts Department of Environmental Protection
Bureau of Waste Site Cleanup

BWSC108A

CRA REMEDIAL MONITORING REPORT

Pursuant to 310 CMR 40.0800 (SUBPART H)

Remedial System or Monitoring Program: 2 of: 2

Release Tracking Number
3 - 13302

E. STATUS OF ACTIVE REMEDIAL SYSTEM OR ACTIVE REMEDIAL MONITORING PROGRAM DURING REPORTING PERIOD: (cont.) (check all that apply)

☐ d. Other additives applied: (total quantity applied at the site for the current reporting period)

Name of Additive	Date	Quantity	Units

Name of Additive	Date	Quantity	Units

☐ e. Check here if any additional Remedial Additives were applied. Attach list of additional additives and include Name of Additive, Date Applied, Quantity Applied and Units (in gals. or lbs.)

F. SHUTDOWNS OF ACTIVE REMEDIAL SYSTEM OR ACTIVE REMEDIAL MONITORING PROGRAM: (check all that apply)

☐ 1. The Active Remedial System had unscheduled shutdowns on one or more occasions during the Reporting Period.

a. Number of Unscheduled Shutdowns: _____ b. Total Number of Days of Unscheduled Shutdowns: _____

c. Reason(s) for Unscheduled Shutdowns: _____

☐ 2. The Active Remedial System had scheduled shutdowns on one or more occasions during the Reporting Period.

a. Number of Scheduled Shutdowns: ☐ b. Total Number of Days of Scheduled Shutdowns: ☐

c. Reason(s) for Scheduled Shutdowns: ☐

☐ 3. The Active Remedial System or Active Remedial Monitoring Program was permanently shutdown/discontinued during the Reporting Period.

a. Date of Final System or Monitoring Program Shutdown: ☐ (mm/dd/yyyy)

☐ b. No Further Effluent Discharges.

☐ c. No Further Application of Remedial Additives planned; sufficient monitoring completed to demonstrate compliance with 310 CMR 40.0046.

☐ d. No Further Submittals Planned.

☐ e. Other: Describe: ☐

G. SUMMARY STATEMENTS: (check all that apply for the current reporting period)

☑ 1. All Active Remedial System checks and effluent analyses required by the approved plan and/or permit were performed when applicable.

☑ 2. There were no significant problems or prolonged (>25% of reporting period) unscheduled shutdowns of the Active Remedial System.

☑ 3. The Active Remedial System or Active Remedial Monitoring Program operated in conformance with the MCP, and all applicable approval conditions and/or permits.

4. Indicate any Operational Problems or Notes:

☐ 5. Check here if additional/supporting Information, data, maps, and/or sketches are attached to the form.

Appendix B
IESI Appendix

Innovative Engineering Solutions, Inc.
25 Spring Street • Walpole, Massachusetts 02081-4301 (508) 668-0033 • fax (508) 668-5175

MEMORANDUM

To: Chip Burkhardt, Jonathan Hone; Raytheon Company
From: Sami A. Fam, Ph.D., P.E., L.S.P., IESI
David Falatko, P.E., IESI
Subject: Work Summary for ROS Report
Raytheon Facility
Wayland, Massachusetts
Date: May 7, 2013

At the request of Raytheon Corporation (Raytheon), Innovative Engineering Solutions Inc. (IESI) has prepared this memorandum outlining the bioremediation activities (at the Northern Area) between October 1, 2012 and April 1, 2013 at the Former Raytheon Facility located in Wayland, Massachusetts. The memorandum provides sufficient detail to be incorporated into a Remedy Operation Status (ROS) report. The following activities have been performed during this time period:

1. Expansion of the Enhanced Anaerobic Dechlorination (EAD) system;
2. EAD system operation;
3. Collection of groundwater elevation data; and,
4. Sampling and analysis to evaluate remediation progress;

These activities are described in greater detail below.

1. Expansion of the EAD System

Fourteen 4-inch diameter injection and extraction wells were installed using Rotosonic drilling techniques by Boart Longyear between October 1, 2012 and October 19, 2012. Well construction logs can be found in Attachment A. The new wells were interconnected by underground piping (extraction to injection wells) in November 2012. Pitless adaptors and well vaults were installed and all of the IW series wells were interconnected with underground piping to enable full system operation during the winter months. The necessary Town of Wayland Conservation Commission approvals were obtained in September 2012 since some of the newly installed wells are located within the 100-foot wetlands buffer zone.

The drill cuttings (2-3 cubic yards) were stored on plastic sheeting outside the 100-foot wetlands buffer zone and samples (SP-1, and SP-2- Appendix B) were submitted to Test America Laboratories in order to determine the final disposition of the soil. The analytical data indicated that no volatile organic compounds (VOCs) were detected in the soil samples, and as such, the soil was landscaped in low areas outside of the wetlands buffer zone. Well development water was gravity clarified in two drums and then injected in the various injection wells. Minimal to no solids were generated from the clarification process. Please refer to Figure 2 for the post-expansion system configuration. All well locations were surveyed in December 2012 by Precision Surveying Inc. of Greenville, Rhode Island.

2. EAD Recirculation System Operation

The EAD program involves recirculation of groundwater within the treatment zone to distribute the added electron donor. During the reporting period, the remediation system extracted from wells REW-4 to REW-10 and well REW-1 (extraction rate of approximately 8 gallons per minute overall). Groundwater was injected into wells RIW-1 to RIW-3, IW-10 to IW-12, REW-2 and REW-3, IW-1 to IW-3, IW-17, IW-13 to IW-16, RIW-8 to RIW-10 and IW-4 to IW-9. Methanol (electron donor) and bioaugmentation culture was added to the various injection wells as specified in Table 1. All additives were injected in batch mode (as 20% dilute solutions), followed by groundwater recirculation.

Approximate recirculation groundwater volumes are also listed in Table 1 for each extraction well. In total, the system recirculated approximately 1,371,800 gallons of groundwater during the past six months. The remediation system was generally not operational during the month of November (construction period.) Groundwater extraction rates are relatively accurate for the combined flow of wells REW-6 to REW-10, however, flow is estimated for wells REW-1, REW-4 and REW-5 since flow meters for these wells have clogged repeatedly for the past 6 months. Flow is estimated at 1 gallon per minute for each of these wells and it is assumed that each extraction pump operated 90% of the time (down periods due to no sunlight and battery depletion). The wells and pumps were cleaned as needed during the reporting period. No significant operational problems were encountered during the reporting period.

The system will continue to operate in 2013. Additional electron donor injections are planned throughout the year beginning in late April 2013. Raytheon plans to use well REW-6 (currently off) for groundwater extraction and temporarily shut down well REW-10 during the spring of 2013. The pumping well substitution is intended to improve system performance.

3. Collection of Groundwater Elevation Data

Groundwater elevation data was collected from selected wells in the Northern Area on March 25, 2013. The data is compiled and presented in Table 2. Figure 1 presents interpreted groundwater elevation contour maps for the March 2013 measurement event. Consistent with past groundwater elevation measurements, groundwater flow is to west.

4. Sampling and Analysis to Evaluate the Progress of the Recirculation System

A round of groundwater samples was collected in December 2012 and represents pre-system expansion conditions for the more downgradient set of wells (REW-6 to REW-12 and MW-563). The December 2012 analytical data is summarized in Table 3. Groundwater samples were collected to evaluate the progress of the remedial program. Groundwater sampling was conducted in January, 2013 and in March/April, 2013. The January 2013 analytical data is summarized in Table 4 and the March/April 2013 data is summarized in Table 5. All laboratory analytical data reports can be found in Attachment B. All sampling was conducted using low flow sampling methods using a peristaltic pump. Groundwater sampling logs can be found in Attachment C.

Some collected samples were analyzed by Bioremediation and Treatability Center (BTC) of Walpole, MA for a variety of biogeochemical parameters (dissolved gases, anions, organic acids, TOC, ammonia, ortho-phosphate, total iron, total manganese). VOC analysis was conducted by Test America of Westfield, MA.

Analytical data are presented in Attachment B and selected data are graphed in Attachment D. Each page in Attachment D is for a single well and is made up of four separate graphs to allow a simultaneous evaluation of biogeochemical and VOC data.

In general the data indicate good electron donor distribution, sulfate reduction, methane generation and dechlorination of parent compounds to breakdown products. The data indicate initial electron donor induced desorption, followed by dechlorination of the chlorinated VOCs (CVOCs). These are all indicators of EAD system success. In addition to the significant dechlorination notable at wells MW-562 and REW-1 (see graphs in Attachment D), groundwater quality improvement is also observed at wells MW-265M, REW-4, REW-5, MW-261S, MW-551, MW-552, MW-553, and newly installed MW-563 within the expanded treatment zone. Total organic carbon (TOC) has been detected (in March 2013) in well MW-563 and REW-9 indicating that the expanded remediation system is already affecting these areas.

Acetone, a fermentation product of many electron donors, is being produced at several locations within the treatment area in concentrations up to 130,000 µg/L (MW-551 and MW-553 in March 2013). It is noteworthy that acetone is only present near injection locations, and is degraded and does not reach more downgradient locations in significant concentrations. The generation of acetone at these locations is a transient phenomenon and the compound is not expected to mobilize beyond the treatment area. Acetone, itself is an electron donor and is expected to degrade rapidly once electron donor addition ceases (Fowler et. al., 2011).

5. References

Fowler, T., Thompson, B., Mueller, J., 2011; Acetone and 2-Butanone Creation Associated with Biological and Chemical Remediation of Environmental Contamination; Remediation Journal Winter 2011, p-9-27.

Tables

Table 1: Summary of Additives and Recirculation Volumes
Table 2: Groundwater Gauging Summary, March 25, 2013
Table 3: Summary of Analytical Data, December 9, 2012
Table 4: Summary of Analytical Data, January 2013
Table 5: Summary of Analytical Data, March/April 2013

Figures

Figure 1: Mid-Depth Groundwater Contour Map, March 25, 2013
Figure 2: Groundwater Treatment System Expansion As-Built

Attachments

Attachment A: Well Construction Logs
Attachment B: Analytical Data
Attachment C: Well Sampling Logs
Attachment D: Selected Well Analytical Data Tracking Graphs

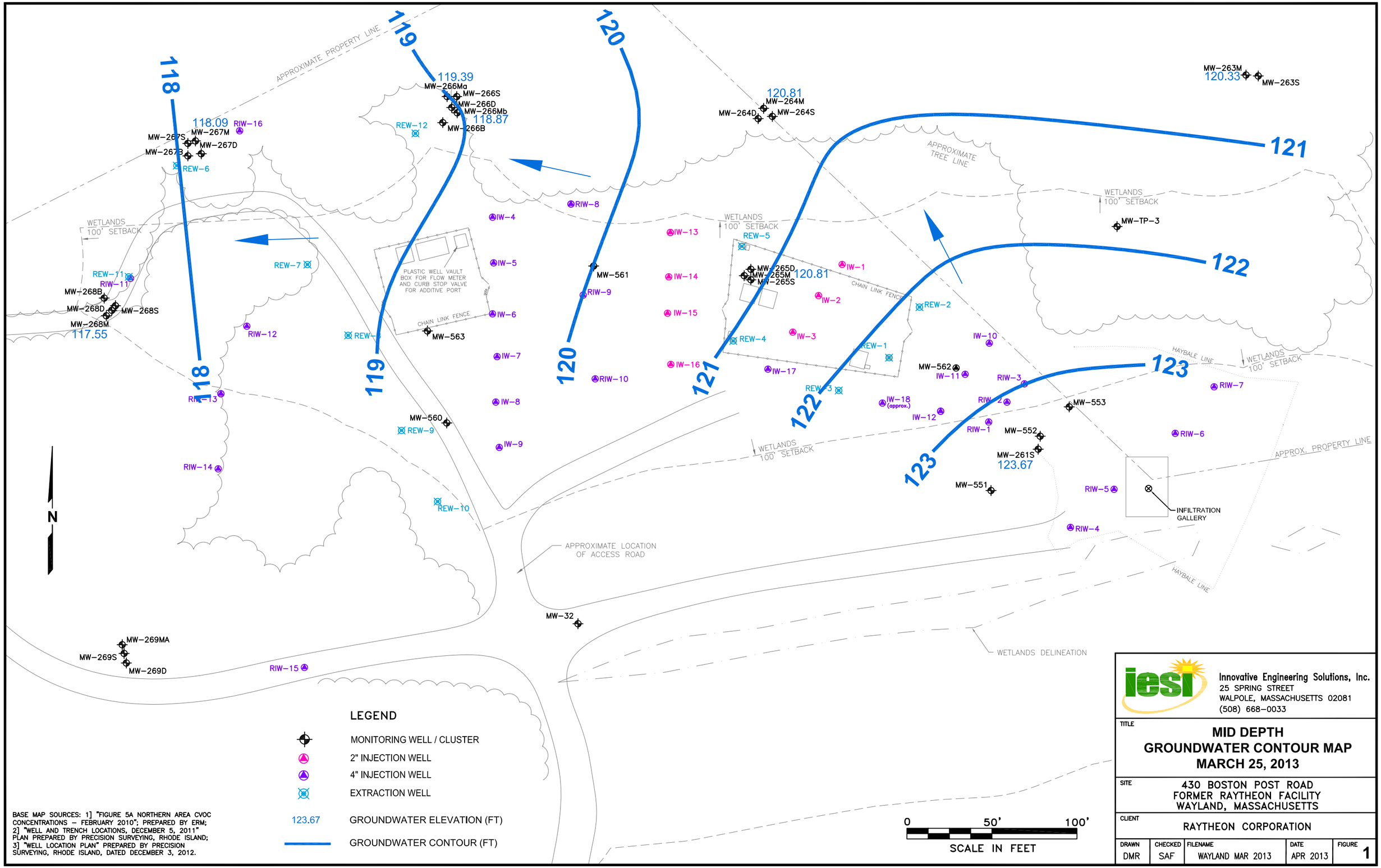

BASE MAP SOURCES: 1] "FIGURE 5A NORTHERN AREA CVOC CONCENTRATIONS – FEBRUARY 2010"; PREPARED BY ERM; 2] "WELL AND TRENCH LOCATIONS, DECEMBER 5, 2011" PLAN PREPARED BY PRECISION SURVEYING, RHODE ISLAND; 3] "WELL LOCATION PLAN" PREPARED BY PRECISION SURVEYING, RHODE ISLAND, DATED DECEMBER 3, 2012.

Innovative Engineering Solutions, Inc.
25 SPRING STREET
WALPOLE, MASSACHUSETTS 02081
(508) 668-0033

TITLE

MID DEPTH GROUNDWATER CONTOUR MAP MARCH 25, 2013

SITE

430 BOSTON POST ROAD
FORMER RAYTHEON FACILITY
WAYLAND, MASSACHUSETTS

CLIENT

RAYTHEON CORPORATION

DRAWN	CHECKED	FILENAME	DATE	FIGURE
DMR	SAF	WAYLAND MAR 2013	APR 2013	1

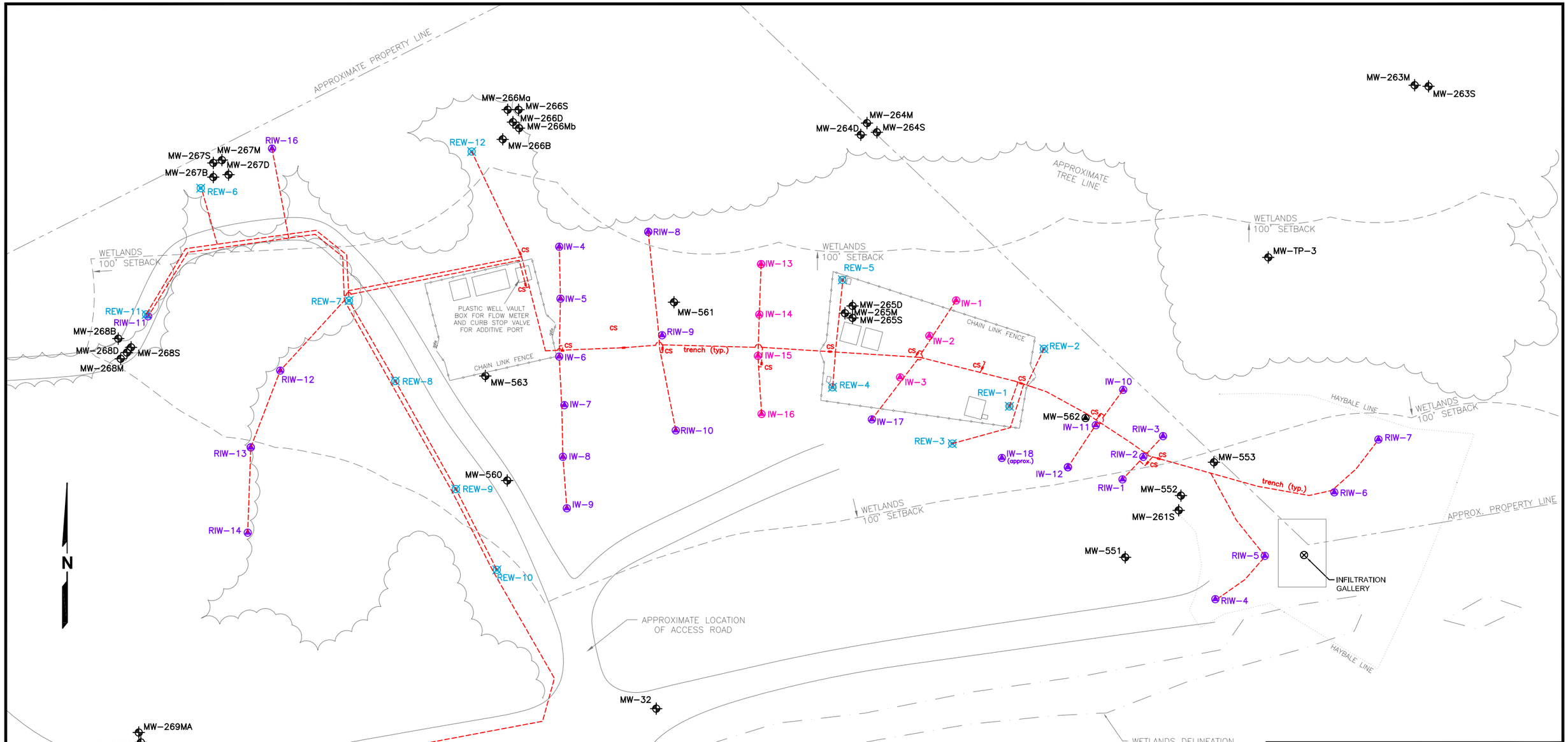

BASE MAP SOURCES: 1] "FIGURE 5A NORTHERN AREA CVOC CONCENTRATIONS – FEBRUARY 2010"; PREPARED BY ERM; 2] "WELL AND TRENCH LOCATIONS, DECEMBER 5, 2011" PLAN PREPARED BY PRECISION SURVEYING, RHODE ISLAND; 3] "WELL LOCATION PLAN" PREPARED BY PRECISION SURVEYING, RHODE ISLAND, DATED DECEMBER 3, 2012.

Innovative Engineering Solutions, Inc.
25 SPRING STREET
WALPOLE, MASSACHUSETTS 02081
(508) 668-0033

TITLE
GROUNDWATER TREATMENT SYSTEM EXPANSION AS-BUILT

SITE
430 BOSTON POST ROAD
FORMER RAYTHEON FACILITY
WAYLAND, MASSACHUSETTS

CLIENT
RAYTHEON CORPORATION

DRAWN	CHECKED	FILENAME	DATE	FIGURE
CPV/DMR	SAF	WAYLAND MAR 2013	APR 2013	2

Table 1 Summary of Additives & Recirculation Volumes
Former Raytheon, Wayland Facility
October 1, 2012 to April 1, 2013

Date	Injection Location	Additive	Estimated Weight
11/28/2012	RIW-4 to RIW-16; IW-1 to IW-17; recharge gallery	28 drums methanol	10,595 lbs
12/5/2012	RIW-4 to RIW-16; IW-1 to IW-17; recharge gallery	28 drums methanol	10,595 lbs
12/11/2012	RIW-8 to RIW-16; IW-13 to IW-16; IW 4 to IW-9	50 gallons bioaugmentation culture	425 lbs.

Recirculation Volumes

Well	REW-1 (gallons)	REW-4 (gallons)	REW-5 (gallons)	REW-7, REW-8, REW-9, REW-10, REW-12
October 1, 2012 to April 1, 2013	233,280	233,280	233,280	671,960
Total	Estimated- flow meter clogging	Estimated- flow meter clogging	Estimated- flow meter clogging	
1,371,800				

Former Raytheon Facility
Wayland, Massachusetts
Table 2 - Groundwater Gauging Summary

Well Designation	Screen Length (feet)	Total Well Depth (feet)	Measuring Point Elevation	DTW 25-Mar-13	GW Elevation March 25, 2013
MW-32	10	12	124.41	NM	NM
MW-1S	10	15	133.79	NM	NM
MW-1M	5	40	133.78	NM	NM
MW-1D	5	55	133.74	NM	NM
MW-261S	5	22	131.28	7.61	123.67
MW-263S	5	25	127.96	6.33	121.63
MW-263M	5	50	127.77	7.44	120.33
MW-264S	10	20	126.32	4.56	121.76
MW-264M	10	44	126.28	5.47	120.81
MW-264D	5	77	126.63	7.99	118.64
MW-265S	10	18	130.06	6.31	123.75
MW-265M	5	45	129.89	9.08	120.81
MW-265D	5	89	130.07	11.38	118.69
MW-266S	10	17	126.79	6.31	120.48
MW-266Ma	5	52	127.72	8.33	119.39
MW-266Mb	10	68	126.88	8.01	118.87
MW-266D	5	105	127.70	9.14	118.56
MW-266B	5	138	128.14	9.31	118.83
MW-267S	5	77	125.30	7.28	118.02
MW-267M	10	95	125.40	7.31	118.09
MW-267D	5	121	125.88	7.6	118.28
MW-267B	5	153	124.02	6.03	117.99
MW-268S	5	74	123.66	6.02	117.64
MW-268M	10	94	123.41	5.86	117.55
MW-268D	5	127	124.86	7.08	117.78
MW-268B	5	153	122.34	4.74	117.60
MW-269S	10	20	125.54	6.53	119.01
MW-269Ma	5	32	124.96	6.81	118.15
MW-269Mb	10	84	125.42	7.94	117.48
MW-269D	5	144	125.34	8.89	116.45
MW-551	5	26	129.30	5.15	124.15
MW-552	5	24	130.09	6.61	123.48
MW-553	5	20	130.33	6.4	123.93
MW-554S	5	196	120.93	NM	NM
MW-554Ma	10	196	120.82	NM	NM
MW-554Mb	10	196	120.96	NM	NM
MW-554D	10	196	120.96	NM	NM
MW-555S	5	194.5	121.10	NM	NM
MW-555Ma	10	194.5	121.25	NM	NM
MW-555Mb	10	194.5	121.26	NM	NM
MW-555D	10	194.5	121.19	NM	NM
MW-556S	5	165	120.93	NM	NM
MW-556M	10	165	121.00	NM	NM
MW-556D	10	165	120.92	NM	NM
MW-307	5	11	124.86	NM	NM
DEP-19S	5	15	120.79	NM	NM
DEP-19M	5	40	120.62	NM	NM
DEP-19D	5	50	120.78	NM	NM
DEP-20	5	50	119.98	NM	NM
DEP-21	5	50	119.18	NM	NM
MW-560	10	67	127.23	8	119.23
MW-561		53.65	127.90	7.31	120.59
MW-562	10	45	128.13	5.15	122.98
MW-563	30	70	125.70	5.16	120.54
RIW-1	30	45	127.84	NM	NM
RIW-2	30	45	127.09	NM	NM
RIW-3	30	45	127.82	NM	NM
RIW-4	15	30	127.23	NM	NM
RIW-5	15	30	126.88	NM	NM
RIW-6	15	30	127.69	NM	NM
RIW-7	15	30	128.54	NM	NM
REW-1	30	45	126.23	NM	NM
REW-2	30	45	127.40	NM	NM
REW-3	30	45	127.15	NM	NM
REW-4	30	45	125.85	NM	NM
REW-5	30	45	125.80	NM	NM
IW-4	10	65	128.30	NM	NM
IW-5	10	65	128.26	NM	NM
IW-6	10	65	128.01	NM	NM
IW-7	10	65	127.93	NM	NM
IW-8	10	65	128.48	NM	NM
IW-9	10	65	128.13	NM	NM
IW-13	10	50	129.47	NM	NM
IW-14	10	50	128.91	NM	NM
IW-15	10	50	129.08	NM	NM
IW-16	10	50	129.66	NM	NM
IW-18	10	35	131.04	NM	NM

DTW- depth to water
NM-not measured

Table 3- Summary of Analytical Data, December 9, 2012

Sample ID	units	MW-563	MW-563 DupX	REW-6	REW-7	REW-8	REW-9	REW-10	REW-11	REW-12	Blank
Methane	µg/L	81	na	149	299	299	209	22	32	31	<0.3
Ethene	µg/L	12	na	1	16	6	0	<0.3	1	1	<0.3
Ethane	µg/L	<0.3	na	<0.3	<0.3	<0.3	<0.3	<0.3	<0.3	<0.3	<0.3
Vinyl Chloride	ug/L	35	50	16	140	26	3	<1	33	10	<1
Chloroethane	ug/L	<5	<5	<10	<10	<5	<1	<1	<10	<1	<1
1,1-DCE	ug/L	<5	<5	<10	<10	<5	<1	<1	<10	<1	<1
1,1-DCA	ug/L	<5	<5	<10	<10	<5	<1	<1	<10	<1	<1
1,2-cDCE	ug/L	250	330	420	930	290	5.5	15	930	220	<1
1,1,1-TCA	ug/L	<5	<5	<10	<10	<5	<1	<1	<10	<1	<1
TCE	ug/L	260	350	510	300	220	14	5.6	740	150	<1
PCE	ug/L	<5	6.8	19	<10	<5	<1	<1	22	8	<1
Acetone	ug/L	<50	<50	<500	<500	<250	<50	<50	<500	<10	<50
THF	ug/L	<50	<50	<100	<100	<50	<10	<10	<100	<10	<10
t-1,2 DCE	ug/L	<5	<5	<10	<10	10	<1	<1	<10	<1	<1
m,p xylene	ug/L	<5	<5	<10	<10	<5	<1	<1	<10	<1	<1
2-Butan. (MEK)	ug/L	<50	<50	<100	<100	<50	<10	<10	<100	<10	<10
Benzene	ug/L	<5	<5	<10	<10	<5	<1	<1	<10	<1	<1
1,2,4 TMB	ug/L	<5	<5	<10	<10	<5	<1	<1	<10	<1	<1
o-xylene	ug/L	<5	<5	<10	<10	<5	<1	<1	<10	<1	<1
1,4 Dioxane	ug/L	3.4	3.4	10	9.9	7.9	1.9	<2	20	4.3	na
Chloride	mg/L	40	na	31	20	27	26	55	18	23	<1
Nitrate	mg/L	<1	na	<1	<1	<1	<1	<1	<1	<1	<1
Sulfate	mg/L	48	na	47	22	42	35	36	42	49	<1
Lactate	mg/L	<1	na	<1	<1	<1	<1	<1	<1	<1	<1
Acetate	mg/L	<1	na	<1	<1	<1	<1	<1	<1	<1	<1
Propionate	mg/L	<1	na	<1	<1	<1	<1	<1	<1	<1	<1
Butyrate	mg/L	<1	na	<1	<1	<1	<1	<1	<1	<1	<1
Alkalinity	mg/L	120	na	100	120	80	80	80	100	80	10
Manganese	mg/L	na	na	na	na	na	na	na	na	na	na
NH3-N	mg/L	0	na	0	0	0	0	0	0	0	<0.02
PO4	mg/L	1	na	0	0	0	0	0	0	0	<0.05
Sulfide	mg/L	na	na	na	na	na	na	na	na	na	na
Total Iron	mg/L	16	na	16	15	13	7	1	6	5	<0.03
COD	mg/L	na	na	na	na	na	na	na	na	na	na
TOC	mg/L	3	na	2	5	2	1	1	2	1	<0.3
pH	pH units	6.8	na	6.9	6.8	6.9	6.7	7.5	6.8	6.7	7.15
H2 headspace	µM	na	na	na	na	na	na	na	na	na	na
CO2	mg/L	na	na	na	na	na	na	na	na	na	na

1,1 DCE- 1,1 dichloroethene; 1,1 DCA-1,1 Dichloroethane; 1,2cDCE- 1,2 cis dichloroethene;
1,1,1 TCA 1,1,1 trichoroethane, TCE- trichoroethene; PCE- tetrachloroethene
na- not analyzed
VOCs by Test America, rest by BTC
THF-tetrahydrofuran
1,2,4 TMB- 1,2,4 trimethylbenzene
J-estimated

Table 4- Summary of Analytical of Analytical Data, January 2013
Former Raytheon Facility, ɿeon Facility, Wayland MA

Sample ID	units	MW-261S	MW-265M	MW-552	MW-562	MW-563	REW-1	REW-6	REW-7	REW-8	REW-12	REW-12 DupX	Blank
Methane	µg/L	19382	30161	13300	25342	141	23593	182	375	292	30	na	<0.3
Ethene	µg/L	15	76	<0.3	17	13	<0.3	1	17	7	1	na	<0.3
Ethane	µg/L	<0.3	<0.3	<0.3	8	<0.3	14	<0.3	<0.3	<0.3	<0.3	na	<0.3
Vinyl Chloride	ug/L	78	<100	160	<40	47	10	13	140	44	14	14	<1
Chloroethane	ug/L	<5	<100	<40	<40	<5	<5	<8	<1	<1	<1	<1	<1
1,1-DCE	ug/L	<5	<100	<40	<40	1.9	<5	<8	1.9	1.3	0.5J	0.39J	<1
1,1-DCA	ug/L	<5	<100	<40	<40	3.4	<5	<8	4.9	1.9	1.2	1.3	<1
1,2-cDCE	ug/L	30	<100	1400	<40	380	11	320	1000	370	270	260	<1
1,1,1-TCA	ug/L	<5	<100	<40	<40	<5	<5	<8	<1	<1	<1	<1	<1
TCE	ug/L	6.3	<100	71	<40	150	<5	530	350	340	200	200	<1
PCE	ug/L	<5	<100	<40	<40	3	<5	17	12	7.5	9.8	9.5	<1
Acetone	ug/L	170000	46000	18000	16000	61	29000	<8	<10	<10	<10	<10	5.2J
THF	ug/L	10	<1000	<400	<400	<50	16	<80	<10	1.3J	<10	<10	<10
t-1,2 DCE	ug/L	<5	<100	<40	<40	<5	<5	<8	2.2	11	<1	<1	<1
m,p xylene	ug/L	<5	<100	<40	<40	<5	<5	<8	<1	<1	<1	<1	<1
2-Butan. (MEK)	ug/L	140	<1000	<400	120	<50	180	<80	<10	<10	<10	<10	<10
Benzene	ug/L	<5	<100	<40	<40	<5	<5	<8	1.3	1	.41J	.41J	<1
1,2,4 TMB	ug/L	<5	<100	<40	<40	<5	<5	<8	<1	<1	<1	<1	<1
o-xylene	ug/L	<5	<100	<40	<40	<5	<5	<8	<1	<1	<1	<1	<1
1,4 Dioxane	ug/L	na	na	na	na	na	na	na	na	na	na	na	na
Chloride	mg/L	21	29	9	30	43	14	40	22	27	27	na	<1
Nitrate	mg/L	<1	<1	<1	<1	<1	<1	<1	<1	<1	<1	na	<1
Sulfate	mg/L	<1	<1	4	<1	21	<1	39	27	45	62	na	<1
Lactate	mg/L	<1	<1	<1	<1	<1	<1	<1	<1	<1	<1	na	<1
Acetate	mg/L	189	594	42	132	115	173	3	7	2	<1	na	<1
Propionate	mg/L	<1	3	<1	<1	<1	<1	<1	<1	<1	<1	na	<1
Butyrate	mg/L	<1	9	1	<1	1.4	5	1.5	1.4	1.5	1.4	na	<1
Alkalinity	mg/L	360	670	280	705	180	360	140	140	100	100	na	10
Manganese	mg/L	na	na	na	na	na	na	na	na	na	na	na	na
NH3-N	mg/L	0	0	0	5	0	0.9	0	0	0	0	na	<0.02
PO4	mg/L	0	1	0	0	0	<0.05	0	<0.05	0	0	na	<0.05
Sulfide	mg/L	na	na	na	na	na	na	na	na	na	na	na	na
Total Iron	mg/L	55	82.0	23.2	80	30	48	14	16	18	19	na	<0.03
COD	mg/L	na	na	na	na	na	na	na	na	na	na	na	na
TOC	mg/L	256	498.0	39.0	81	102	182	5	7	4	2	na	<0.3
pH	pH units	6.84	6.8	6.9	6.5	6.7	6.8	6.8	6.7	6.7	6.6	na	7.17
H2 headspace	µM	na	na	na	na	na	na	na	na	na	na	na	na
CO2	mg/L	na	na	na	na	na	na	na	na	na	na	na	na

1,1 DCE- 1,1 dichloroethene; 1,1 DCA-1,1 Dichloroethane; 1,2cDCE- 1,2 cis dichloroethene;
1,1,1 TCA 1,1,1 trichoroethane, TCE- trichoroethene; PCE- tetrachloroethene
na- not analyzed
VOCs by Test America, rest by BTC
THF-tetrahydrofuran
1,2,4 TMB- 1,2,4 trimethylbenzene
J-estimated

Table 5- Summary of Analytical Data, March/April 2013
Former Raytheon Facility, Wayland MA

Sample ID	units	DEP-19M	DEP-21	MW-261S	MW-263M	MW-263M DupX3	MW-264M	MW-265S	MW-265M	MW-265D	MW-266Ma	MW-266Ma DupX2	MW-266MB	MW-267S	MW-267M	MW-268M	MW-268D	MW-269Ma	MW-551	MW-552	MW-553	MW-560	MW-561	MW-562	MW-563	Blnk
Methane	ug/L	na	na	21890	na	na	na	na	36553	na	na	na	na	na	na	29	na	na	na	12420	24936	167	1544	35530	28010	<0.3
Ethene	ug/L	na	na	28.2	na	na	na	na	20	na	na	na	na	na	na	4.3	na	na	na	20.4	18	2	96	18.3	18.3	<0.3
Ethane	ug/L	na	na	<0.3	na	na	na	na	<0.3	na	na	na	na	na	na	5.9	na	na	na	<0.3	<0.3	<0.3	<0.3	21.1	<0.3	<0.3
Vinyl Chloride	ug/L	<1	<1	<200	<1	<1	<1	<1	26	<1	<1	<1	7.5	<5	20	91	<1	<1	130	260	<200	1.4	310	<4	91	<1
Chloroethane	ug/L	<1	<1	<200	<1	<1	<1	<1	<20	<1	<1	<1	<1	<10	<10	<100	<2	<2	<200	<16	<200	<2	<5	<4	<10	<1
1,1-DCE	ug/L	<1	<1	<200	<1	<1	<1	<1	<10	<1	<1	<1	<1	<5	<5	<25	<1	<1	<100	<8	<200	<1	<5	<4	<10	<1
1,1-DCA	ug/L	<1	<1	<200	<1	<1	<1	<1	<10	<1	<1	<1	<1	<5	<5	<25	<1	<1	<100	<8	<200	<1	<5	<4	<10	<1
1,2-c DCE	ug/L	<1	4.8	<200	<1	<1	6.2	<1	32	<1	9.1	9.2	80	72	590	2100	9.3	2.2	240	320	<200	16	220	<4	420	<1
1,1,1-TCA	ug/L	<1	<1	<200	<1	<1	<1	<1	<10	<1	<1	<1	<1	<5	<5	<25	<1	<1	<100	<8	<200	<1	<5	<4	<10	<1
TCE	ug/L	<1	1.2	<200	<1	<1	8.6	<1	<10	<1	27	27	53	370	350	1100	6.3	1	<100	39	<200	3.3	96	<4	<10	<1
PCE	ug/L	<1	<1	<200	<1	<1	1.5	<1	<10	<1	<1	<1	13	7.6	14	42	<1	<1	<100	<8	<200	<1	<5	<4	<10	<1
Acetone	ug/L	<50	<50	52000	<50	<50	<50	<50	7500	<50	<50	<50	<50	<250	<250	<1300	<50	<50	130000	2900	1.3E+05	<50	<250	930	<500	<50
THF	ug/L	<10	<10	<2000	<10	<10	<10	<10	<100	<10	<10	<10	<10	<100	<50	<100	<10	<10	<1000	<500	<2000	<10	<5	<40	<100	<10
t-1,2 DCE	ug/L	<1	<1	<200	<1	<1	<1	<1	<10	<1	<1	<1	<1	<5	<5	<25	<1	<1	<100	<8	<200	<1	20	<4	<10	<1
m,p xylene	ug/L	<2	<2	<200	<2	<2	<2	<2	<10	<2	<2	<2	<2	<5	<10	<100	<2	<2	<200	<80	<200	<2	<5	<200	<10	<2
2-Butan. (MEK)	ug/L	<10	<10	<2000	<10	<10	<10	<10	110	<10	<10	<10	<10	<50	<50	<250	<50	<50	<1000	<8	<2000	<10	<50	540	<100	<50
o-xylene	ug/L	<1	<1	<200	<1	<1	<1	<1	<10	<1	<1	<1	<1	<5	<5	<25	<1	<1	<100	<8	<200	<1	<5	<4	<10	<1
1,4 Dioxane	ug/L	na	na	<6.4	na	na	na	na	<6.4	na	6.2	6	na	7.4	<250	14	na	2	na	3.7	na	na	na	na	na	na
Chloride	mg/L	na	na	24	na	na	na	na	23	na	na	na	na	na	na	16	na	na	na	9	12	15	53	30	27	<1
Nitrate	mg/L	na	na	<1	na	na	na	na	<1	na	na	na	na	na	na	<1	na	na	na	<1	<1	<1	<1	<1	<1	<1
Sulfate	mg/L	na	na	<1	na	na	na	na	<1	na	na	na	na	na	na	33	na	na	na	6	<1	16	24	<1	<1	<1
Lactate	mg/L	na	na	<1	na	na	na	na	<1	na	na	na	na	na	na	<1	na	na	na	<1	<1	<1	<1	<1	<1	<1
Acetate	mg/L	na	na	175	na	na	na	na	361	na	na	na	na	na	na	<1	na	na	na	51	252	17	<1	351	172	<1
Propionate	mg/L	na	na	<1	na	na	na	na	<1	na	na	na	na	na	na	<1	na	na	na	<1	<1	<1	<1	<1	<1	<1
Butyrate	mg/L	na	na	6	na	na	na	na	7	na	na	na	na	na	na	<1	na	na	na	<1	3	<1	2	5	<1	<1
Alkalinity	mg/L	na	na	400	na	na	na	na	610	na	na	na	100	na	na	120	na	na	na	300	550	100	160	580	520	10
Manganese	mg/L	na	na	na	na	na	na	na	na	na	na	na	na	na	na	na	na	na	na	na	na	na	na	na	na	na
NH3-N	mg/L	na	na	0.19	na	na	na	na	0.1	na	na	na	<0.02	na	na	0.1	na	na	na	0.2	0.04	0.7	0.03	2.00	7.00	<0.02
PO4	mg/L	na	na	1.54	na	na	na	na	0.8	na	na	na	0.13	na	na	0.3	na	na	na	0.2	0.6	<0.05	<0.05	1.33	<0.05	<0.05
Sulfide	mg/L	na	na	na	na	na	na	na	na	na	na	na	na	na	na	na	na	na	na	na	na	na	na	na	na	na
Total Iron	mg/L	na	na	74.5	na	na	na	na	55.6	na	na	na	na	na	na	21	na	na	na	21	124	0.2	11.90	127.0	110.0	<0.03
COD	mg/L	na	na	na	na	na	na	na	na	na	na	na	na	na	na	na	na	na	na	na	na	na	na	na	na	na
TOC	mg/L	na	na	110	na	na	na	na	225	na	na	na	<0.3	na	na	1.8	na	na	na	28	300	53	2.7	175	103	<0.3
pH	pH unit	na	na	6.78	na	na	na	na	7.0	na	na	na	6.6	na	na	6.9	na	na	na	6.8	6.93	10.7	7.22	6.86	6.85	7.68
H2 headspace	µM	na	na	na	na	na	na	na	na	na	na	na	na	na	na	na	na	na	na	na	na	na	na	na	na	na
CO2	mg/L	na	na	na	na	na	na	na	na	na	na	na	na	na	na	na	na	na	na	na	na	na	na	na	na	na

1,1 DCE- 1,1 dichloroethene; 1,1 DCA-1,1 Dichloroethane; 1,2cDCE- 1,2 cis dichloroethene;
1,1,1 TCA- 1,1,1 trichoroethane, TCE- trichoroethene; PCE- tetrachloroethene
na- not analyzed
VOCs by Test America, rest by BTC
1,4 dioxane by 8260sim
all other VOCs by 8260B
THF-tetrahydrofuran
1,2,4 TMB- 1,2,4 trimethylbenzene

Table 5- Summary of Analytical Data, March/April 2013 (Cont)
Former Raytheon Facility, Wayland MA

Sample ID	units	REW-1	REW-4	REW-5	REW-6	REW-7	REW-8	REW-8 Dup-X1	REW-9	REW-10	REW-11	REW-12
Methane	ug/L	29995	13144	5226	169	309	455	na	439	23	83	76
Ethene	ug/L	43	8	<0.3	1	11	8	na	1	<0.3	3	3
Ethane	ug/L	27.4	<0.3	<0.3	0	<0.3	<0.3	na	<0.3	<0.3	0	<0.3
Vinyl Chloride	ug/L	<50	31	44	17	130	72	70	4.2	<1	45	23
Chloroethane	ug/L	<50	<5	<10	<10	<10	<10	<10	<1	<1	<1	<1
1,1-DCE	ug/L	<50	<5	<10	<10	<10	<10	<10	<1	<1	2.1	<1
1,1-DCA	ug/L	<50	<5	<10	<10	<10	<10	<10	<1	<1	4.8	1.3
1,2-cDCE	ug/L	81	41	290	420	920	410	390	34	10	1400	280
1,1,1-TCA	ug/L	<50	<5	<10	<10	<10	<10	<10	<1	<1	<1	<1
TCE	ug/L	<50	<5	93	510	300	300	280	7.9	3.5	410	180
PCE	ug/L	<50	<5	<10	18	<10	<500	<500	<1	<1	22	<1
Acetone	ug/L	24000	4400	4800	<500	<500	<500	<500	<50	<50	<50	<50
THF	ug/L	<500	<50	<100	<100	<100	<100	<100	<10	<10	<10	<10
t-1,2 DCE	ug/L	<50	<5	<10	<10	<10	<10	7.9	<1	<1	2.7	1
m,p xylene	ug/L	<50	<5	<10	<10	<10	<10	<10	<1	<1	<2	<1
2-Butan. (MEK)	ug/L	<500	81	<100	<100	<100	<100	<100	<10	<10	<10	110
Benzene	ug/L	<50	<5	<10	<10	<10	<10	<10	<1	<1	1.4	<1
1,2,4 TMB	ug/L	<50	<5	<10	<10	<10	<10	<10	<1	<1	1.1	<1
o-xylene	ug/L	<50	<5	<10	<10	<10	<10	<10	<1	<1	1.7	<1
1,4 Dioxane	ug/L	na	na	na	na	na	na	na	na	na	na	na
Chloride	mg/L	26	15	33	33	18	27	na	38	66	19	28
Nitrate	mg/L	<1	<1	<1	<1	<1	<1	na	<1	<1	<1	<1
Sulfate	mg/L	1	12	9	44	23	32	na	29	37	34	51
Lactate	mg/L	<1	<1	<1	<1	<1	<1	na	<1	<1	<1	<1
Acetate	mg/L	506	203	105	<1	5	29	na	50	<1	5	5
Propionate	mg/L	5	4	<1	<1	<1	<1	na	<1	<1	<1	<1
Butyrate	mg/L	21	6	<1	3	<1	3	na	<1	<1	3	<1
Alkalinity	mg/L	780	280	260	120	120	120	na	160	100	120	100
Manganese	mg/L	na	na	na	na	na	na	na	na	na	na	na
NH3-N	mg/L	3	0.4	0.43	0	0	0	na	0	0	0	0.1
PO4	mg/L	1.4	0.1	0.73	0	0	0	na	0	0	0	0.2
Sulfide	mg/L	na	na	na	na	na	na	na	na	na	na	na
Total Iron	mg/L	112	27	29.3	16	17	16	na	12	1	18	20.0
COD	mg/L	na	na	na	na	na	na	na	na	na	na	na
TOC	mg/L	461	260	96.4	3	5	27	na	48	3	3	8
pH	pH unit	6.7	6.72	6.84	7	7	7	na	7	7	7	6.7
H2 headspace	µM	na	na	na	na	na	na	na	na	na	na	na
CO2	mg/L	na	na	na	na	na	na	na	na	na	na	na

1,1 DCE- 1,1 dichloroethene; 1,1 DCA-1,1 Dichloroethane; 1,2cDCE- 1,2 cis dichloroethene;
1,1,1 TCA- 1,1,1 trichoroethane, TCE- trichoroethene; PCE- tetrachloroethene
na- not analyzed
VOCs by Test America, rest by BTC
1,4 dioxane by 8260sim
all other VOCs by 8260B
THF-tetrahydrofuran
1,2,4 TMB- 1,2,4 trimethylbenzene

Well Construction Log

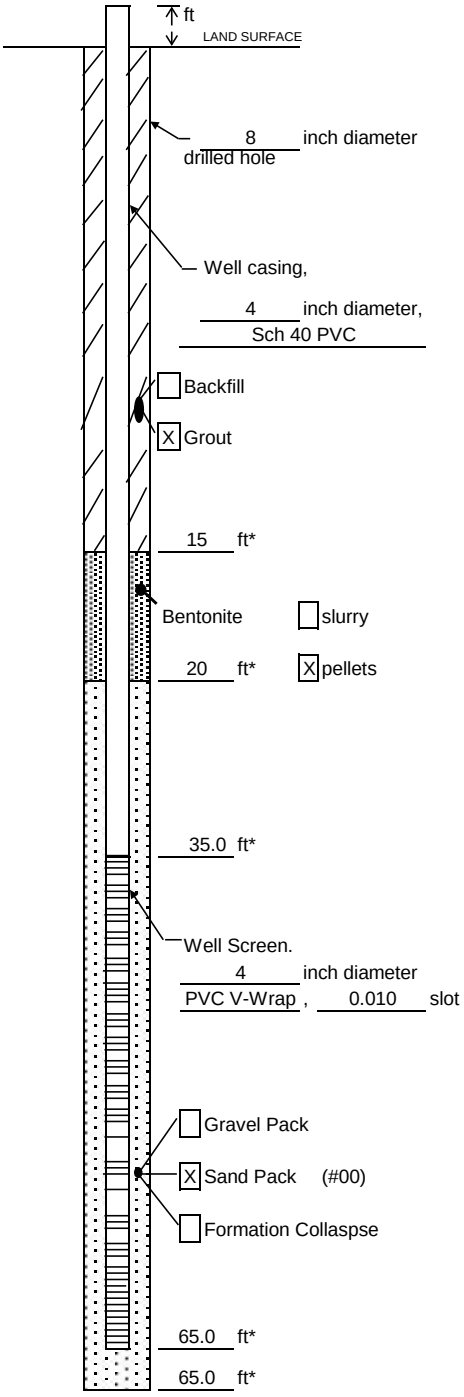

Measuring Point is
Top of Well Casing
Unless Otherwise Noted.

* Depth Below Land Surface

Project Raytheon - RA008 Well RIW-8

Town/City Wayland

County _____ State MA

Permit No. _____

Land-Surface Elevation and Datum:

_____ feet ☐ Surveyed

☐ Estimated

Installation Date(s) 19-Oct-12

Drilling Method Rotosonic

Drilling Contractor Boart Longyear

Drilling Fluid Water

Development Technique(s) and Date(s)

Fluid Loss During Drilling < 50 gallons

Water Removed During Development _____ gallons

Static Depth to Water _____ feet below M.P.

Pumping Depth to Water _____ feet below M.P.

Pumping Duration _____ hours

Yield _____ gpm Date _____

Specific Capacity _____ gpm/ft

Well Purpose Injection Well

Remarks _____

Prepared by Garth Norgren Hirsch

Well Construction Log

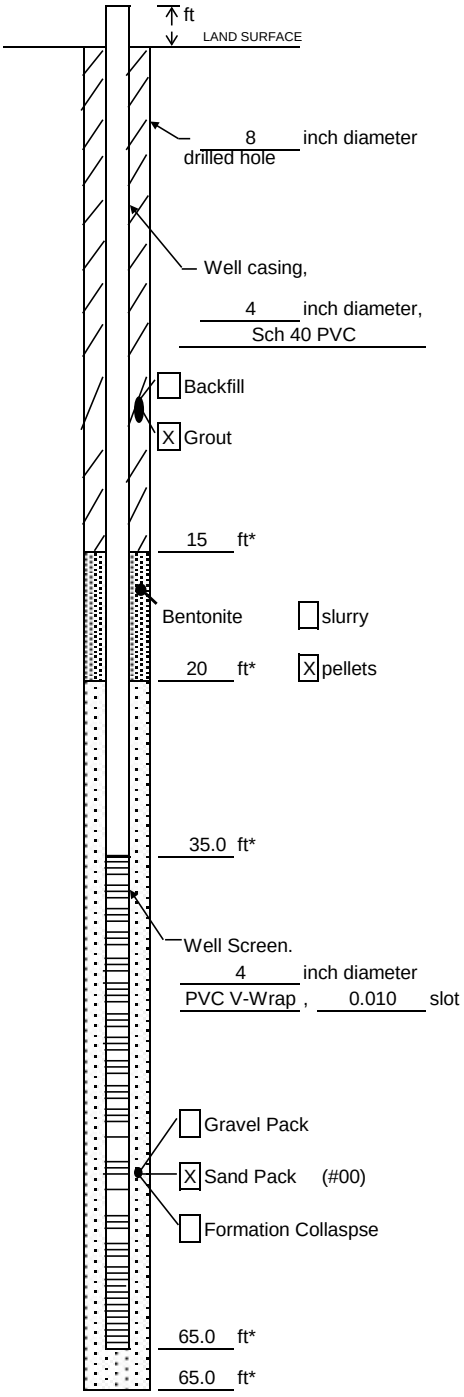

Measuring Point is
Top of Well Casing
Unless Otherwise Noted.

* Depth Below Land Surface

Project Raytheon - RA008 Well RIW-9

Town/City Wayland

County _____ State MA

Permit No. _____

Land-Surface Elevation and Datum:

_____ feet ☐ Surveyed

☐ Estimated

Installation Date(s) 2-Oct-12

Drilling Method Rotosonic

Drilling Contractor Boart Longyear

Drilling Fluid Water

Development Technique(s) and Date(s)

Fluid Loss During Drilling < 50 gallons

Water Removed During Development _____ gallons

Static Depth to Water _____ feet below M.P.

Pumping Depth to Water _____ feet below M.P.

Pumping Duration _____ hours

Yield _____ gpm Date _____

Specific Capacity _____ gpm/ft

Well Purpose Injection Well

Remarks _____

Prepared by Garth Norgren Hirsch

Well Construction Log

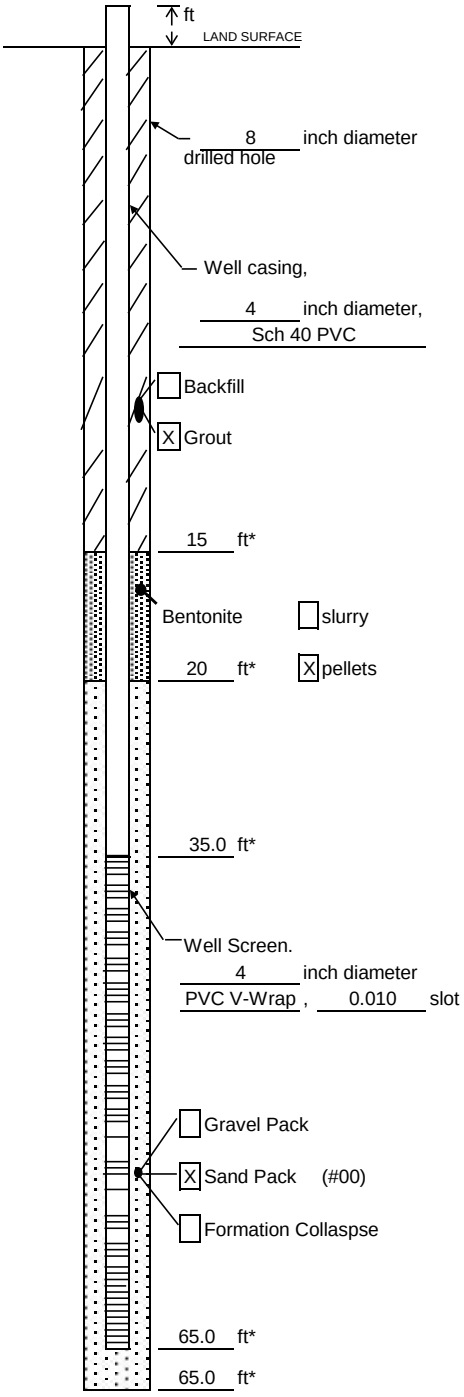

Measuring Point is
Top of Well Casing
Unless Otherwise Noted.

* Depth Below Land Surface

Project Raytheon - RA008 Well RIW-10

Town/City Wayland

County _____ State MA

Permit No. _____

Land-Surface Elevation and Datum:

_____ feet ☐ Surveyed

☐ Estimated

Installation Date(s) 3-Oct-12

Drilling Method Rotosonic

Drilling Contractor Boart Longyear

Drilling Fluid Water

Development Technique(s) and Date(s)

Fluid Loss During Drilling < 50 gallons

Water Removed During Development _____ gallons

Static Depth to Water _____ feet below M.P.

Pumping Depth to Water _____ feet below M.P.

Pumping Duration _____ hours

Yield _____ gpm Date _____

Specific Capacity _____ gpm/ft

Well Purpose Injection Well

Remarks _____

Prepared by Garth Norgren Hirsch

Well Construction Log

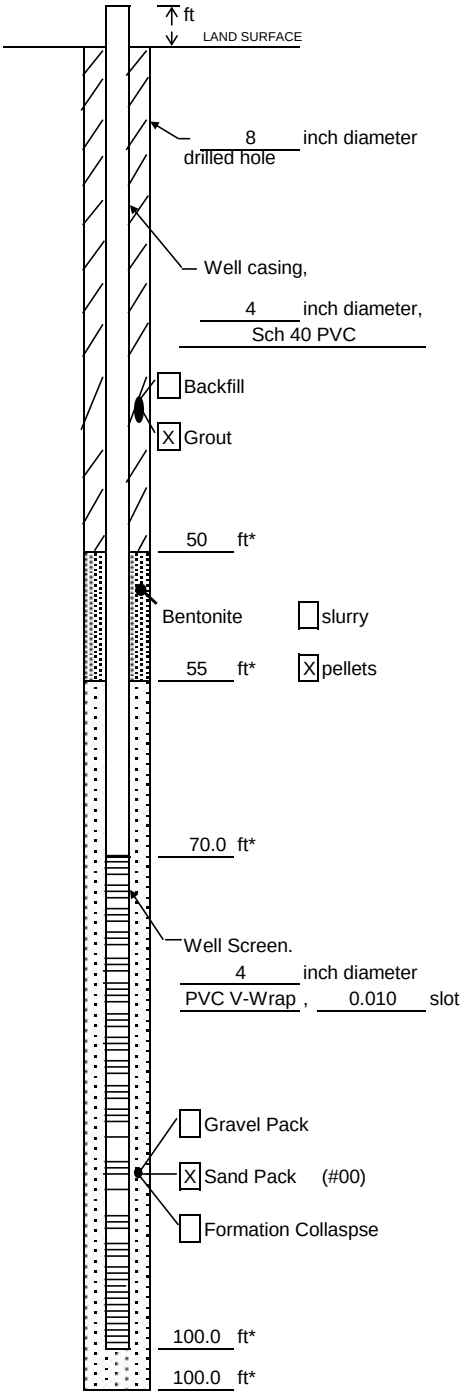

Measuring Point is
Top of Well Casing
Unless Otherwise Noted.

* Depth Below Land Surface

Project Raytheon - RA008 Well RIW-11

Town/City Wayland

County _____ State MA

Permit No. _____

Land-Surface Elevation and Datum:

_____ feet ☐ Surveyed

☐ Estimated

Installation Date(s) 16-Oct-12

Drilling Method Rotosonic

Drilling Contractor Boart Longyear

Drilling Fluid Water

Development Technique(s) and Date(s)

Fluid Loss During Drilling < 100 gallons

Water Removed During Development _____ gallons

Static Depth to Water _____ feet below M.P.

Pumping Depth to Water _____ feet below M.P.

Pumping Duration _____ hours

Yield _____ gpm Date _____

Specific Capacity _____ gpm/ft

Well Purpose Injection Well

Remarks _____

Prepared by Garth Norgren Hirsch

Well Construction Log

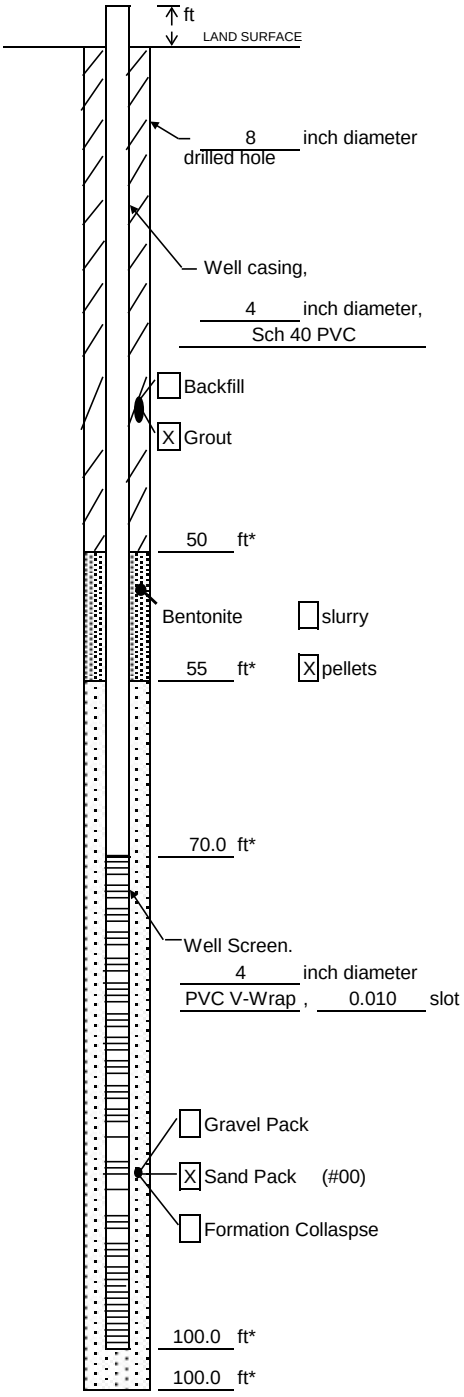

Measuring Point is
Top of Well Casing
Unless Otherwise Noted.

* Depth Below Land Surface

Project Raytheon - RA008 Well RIW-12

Town/City Wayland

County _____ State MA

Permit No. _____

Land-Surface Elevation and Datum:

_____ feet ☐ Surveyed

☐ Estimated

Installation Date(s) 10-Oct-12

Drilling Method Rotosonic

Drilling Contractor Boart Longyear

Drilling Fluid Water

Development Technique(s) and Date(s)

Fluid Loss During Drilling < 100 gallons

Water Removed During Development _____ gallons

Static Depth to Water _____ feet below M.P.

Pumping Depth to Water _____ feet below M.P.

Pumping Duration _____ hours

Yield _____ gpm Date _____

Specific Capacity _____ gpm/ft

Well Purpose Injection Well

Remarks _____

Prepared by Garth Norgren Hirsch

Well Construction Log

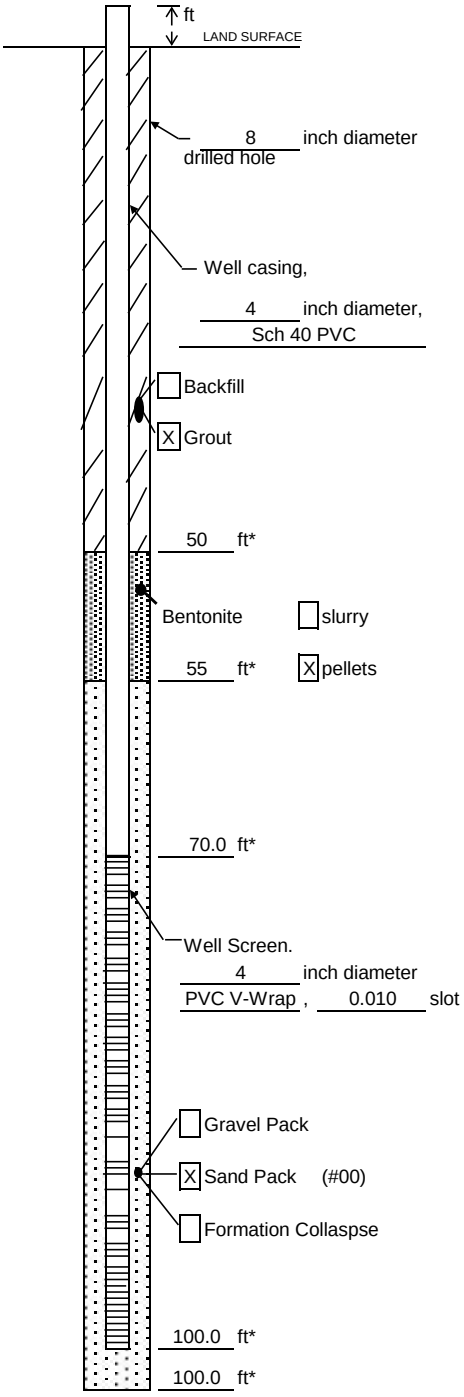

Measuring Point is
Top of Well Casing
Unless Otherwise Noted.

* Depth Below Land Surface

Project Raytheon - RA008 Well RIW-13

Town/City Wayland

County _____ State MA

Permit No. _____

Land-Surface Elevation and Datum:

_____ feet ☐ Surveyed

☐ Estimated

Installation Date(s) 11-Oct-12

Drilling Method Rotosonic

Drilling Contractor Boart Longyear

Drilling Fluid Water

Development Technique(s) and Date(s)

Fluid Loss During Drilling < 100 gallons

Water Removed During Development _____ gallons

Static Depth to Water _____ feet below M.P.

Pumping Depth to Water _____ feet below M.P.

Pumping Duration _____ hours

Yield _____ gpm Date _____

Specific Capacity _____ gpm/ft

Well Purpose Injection Well

Remarks _____

Prepared by Garth Norgren Hirsch

Well Construction Log

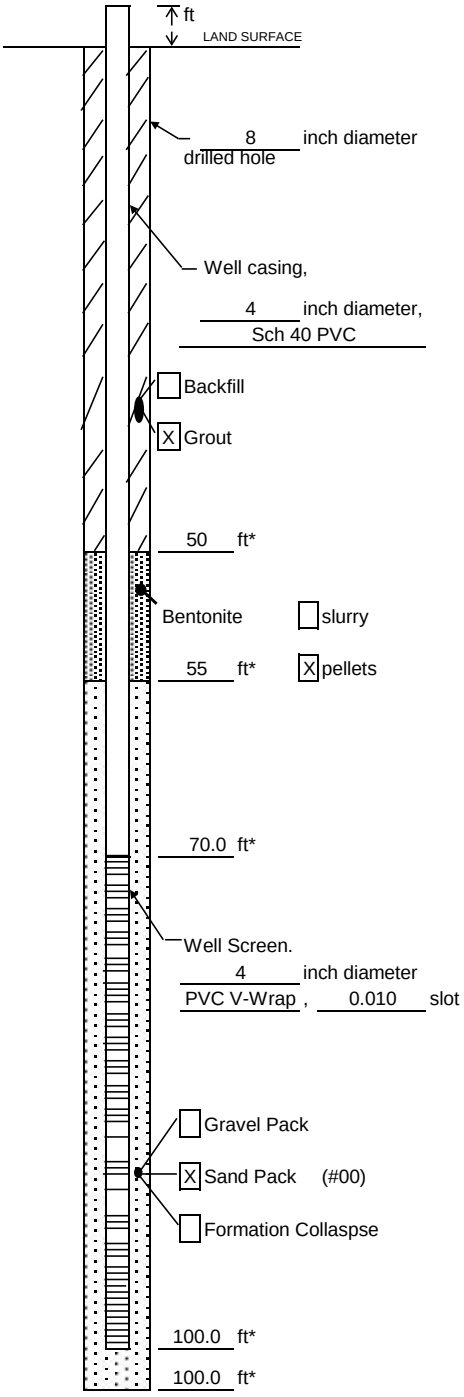

Measuring Point is
Top of Well Casing
Unless Otherwise Noted.

* Depth Below Land Surface

Project Raytheon - RA008 Well RIW-14

Town/City Wayland

County _____ State MA

Permit No. _____

Land-Surface Elevation and Datum:

_____ feet ☐ Surveyed

☐ Estimated

Installation Date(s) 12-Oct-12

Drilling Method Rotosonic

Drilling Contractor Boart Longyear

Drilling Fluid Water

Development Technique(s) and Date(s)

Fluid Loss During Drilling < 100 gallons

Water Removed During Development _____ gallons

Static Depth to Water _____ feet below M.P.

Pumping Depth to Water _____ feet below M.P.

Pumping Duration _____ hours

Yield _____ gpm Date _____

Specific Capacity _____ gpm/ft

Well Purpose Injection Well

Remarks _____

Prepared by Garth Norgren Hirsch

Well Construction Log

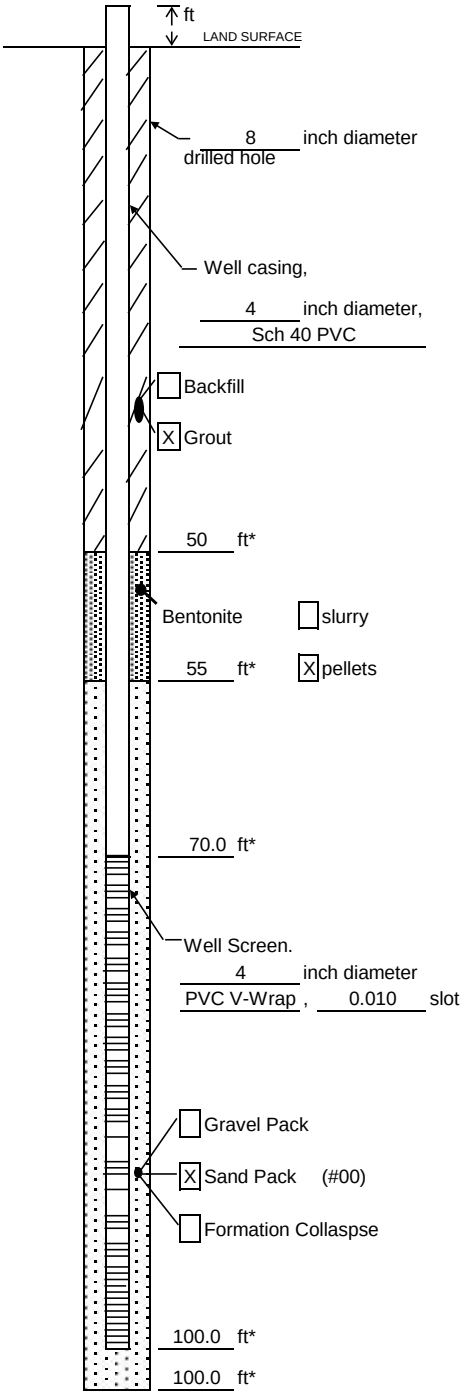

Measuring Point is
Top of Well Casing
Unless Otherwise Noted.

* Depth Below Land Surface

Project Raytheon - RA008 Well RIW-15

Town/City Wayland

County _____ State MA

Permit No. _____

Land-Surface Elevation and Datum:

_____ feet ☐ Surveyed

☐ Estimated

Installation Date(s) 15-Oct-12

Drilling Method Rotosonic

Drilling Contractor Boart Longyear

Drilling Fluid Water

Development Technique(s) and Date(s)

Fluid Loss During Drilling < 100 gallons

Water Removed During Development _____ gallons

Static Depth to Water _____ feet below M.P.

Pumping Depth to Water _____ feet below M.P.

Pumping Duration _____ hours

Yield _____ gpm Date _____

Specific Capacity _____ gpm/ft

Well Purpose Injection Well

Remarks _____

Prepared by Garth Norgren Hirsch

Well Construction Log

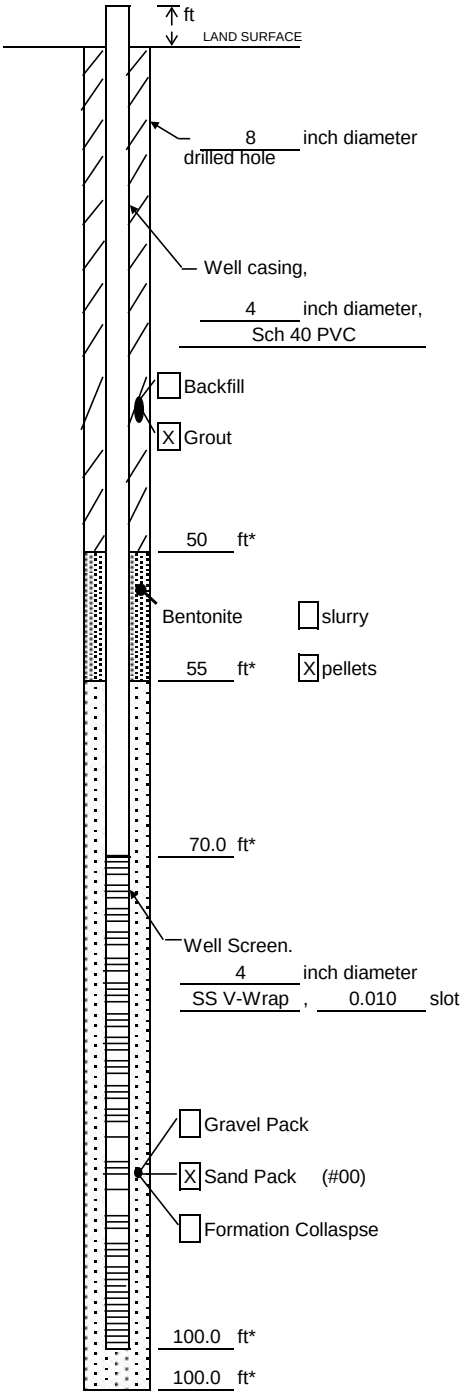

Measuring Point is
Top of Well Casing
Unless Otherwise Noted.

* Depth Below Land Surface

Project Raytheon - RA008 Well REW-6

Town/City Wayland

County _____ State MA

Permit No. _____

Land-Surface Elevation and Datum:

_____ feet ☐ Surveyed

☐ Estimated

Installation Date(s) 18-Oct-12

Drilling Method Rotosonic

Drilling Contractor Boart Longyear

Drilling Fluid Water

Development Technique(s) and Date(s)

Fluid Loss During Drilling < 100 gallons

Water Removed During Development _____ gallons

Static Depth to Water _____ feet below M.P.

Pumping Depth to Water _____ feet below M.P.

Pumping Duration _____ hours

Yield _____ gpm Date _____

Specific Capacity _____ gpm/ft

Well Purpose Extraction Well

Remarks _____

Prepared by Garth Norgren Hirsch

Well Construction Log

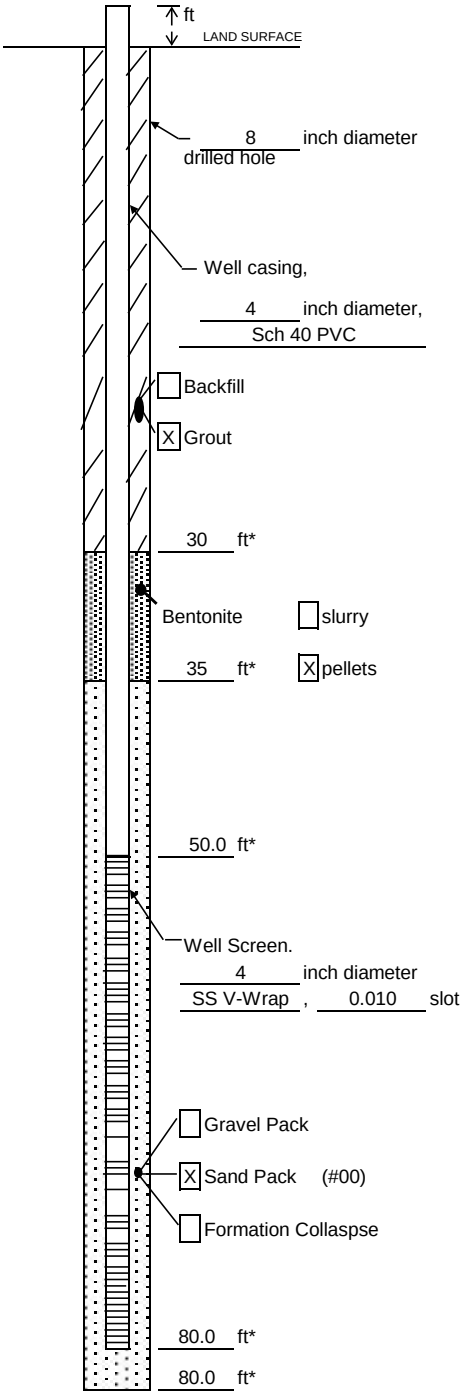

Measuring Point is
Top of Well Casing
Unless Otherwise Noted.

* Depth Below Land Surface

Project Raytheon - RA008 Well REW-7

Town/City Wayland

County _____ State MA

Permit No. _____

Land-Surface Elevation and Datum:

_____ feet ☐ Surveyed

☐ Estimated

Installation Date(s) 4-Oct-12

Drilling Method Rotosonic

Drilling Contractor Boart Longyear

Drilling Fluid Water

Development Technique(s) and Date(s)

Fluid Loss During Drilling < 100 gallons

Water Removed During Development _____ gallons

Static Depth to Water _____ feet below M.P.

Pumping Depth to Water _____ feet below M.P.

Pumping Duration _____ hours

Yield _____ gpm Date _____

Specific Capacity _____ gpm/ft

Well Purpose Extraction Well

Remarks _____

Prepared by Garth Norgren Hirsch

Well Construction Log

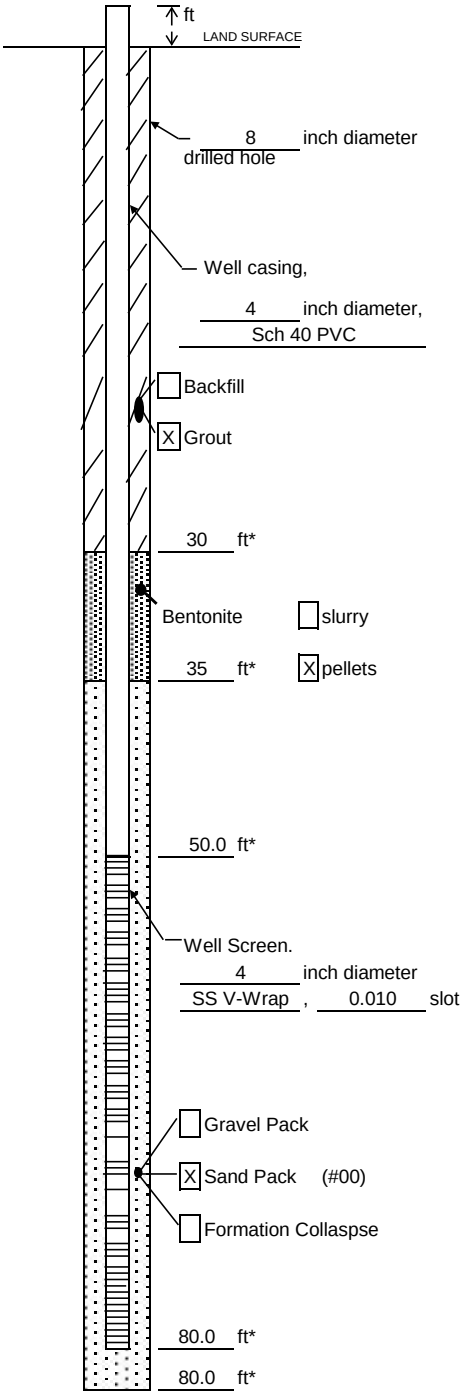

Measuring Point is
Top of Well Casing
Unless Otherwise Noted.

* Depth Below Land Surface

Project Raytheon - RA008 Well REW-8

Town/City Wayland

County _____ State MA

Permit No. _____

Land-Surface Elevation and Datum:

_____ feet ☐ Surveyed

☐ Estimated

Installation Date(s) 5-Oct-12

Drilling Method Rotosonic

Drilling Contractor Boart Longyear

Drilling Fluid Water

Development Technique(s) and Date(s)

Fluid Loss During Drilling < 100 gallons

Water Removed During Development _____ gallons

Static Depth to Water _____ feet below M.P.

Pumping Depth to Water _____ feet below M.P.

Pumping Duration _____ hours

Yield _____ gpm Date _____

Specific Capacity _____ gpm/ft

Well Purpose Extraction Well

Remarks _____

Prepared by Garth Norgren Hirsch

Well Construction Log

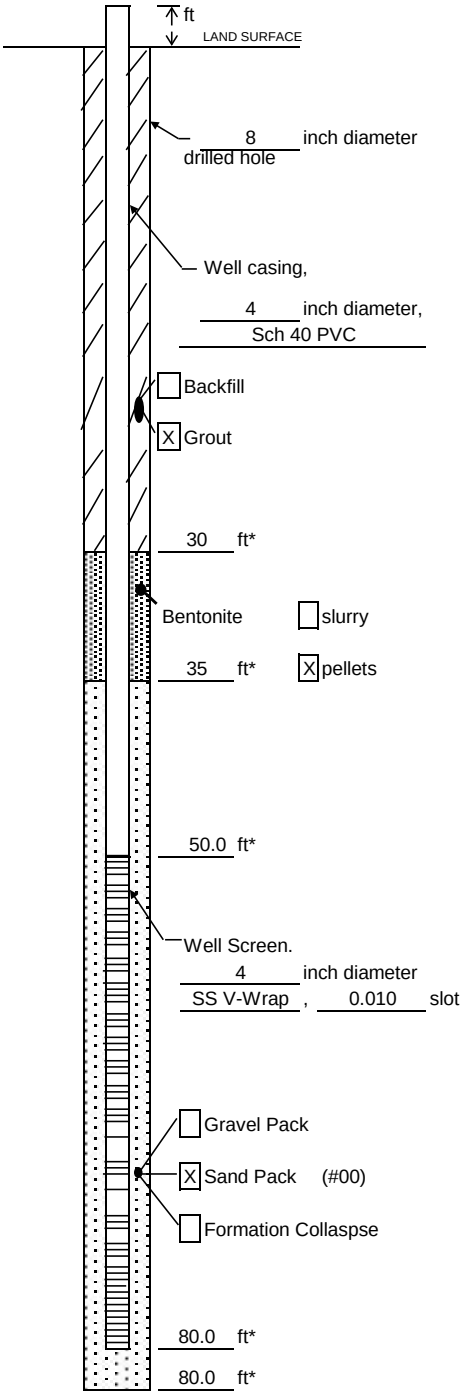

Measuring Point is
Top of Well Casing
Unless Otherwise Noted.

* Depth Below Land Surface

Project Raytheon - RA008 Well REW-9

Town/City Wayland

County _____ State MA

Permit No. _____

Land-Surface Elevation and Datum:

_____ feet ☐ Surveyed

☐ Estimated

Installation Date(s) 8-Oct-12

Drilling Method Rotosonic

Drilling Contractor Boart Longyear

Drilling Fluid Water

Development Technique(s) and Date(s)

Fluid Loss During Drilling < 100 gallons

Water Removed During Development _____ gallons

Static Depth to Water _____ feet below M.P.

Pumping Depth to Water _____ feet below M.P.

Pumping Duration _____ hours

Yield _____ gpm Date _____

Specific Capacity _____ gpm/ft

Well Purpose Extraction Well

Remarks _____

Prepared by Garth Norgren Hirsch

Well Construction Log

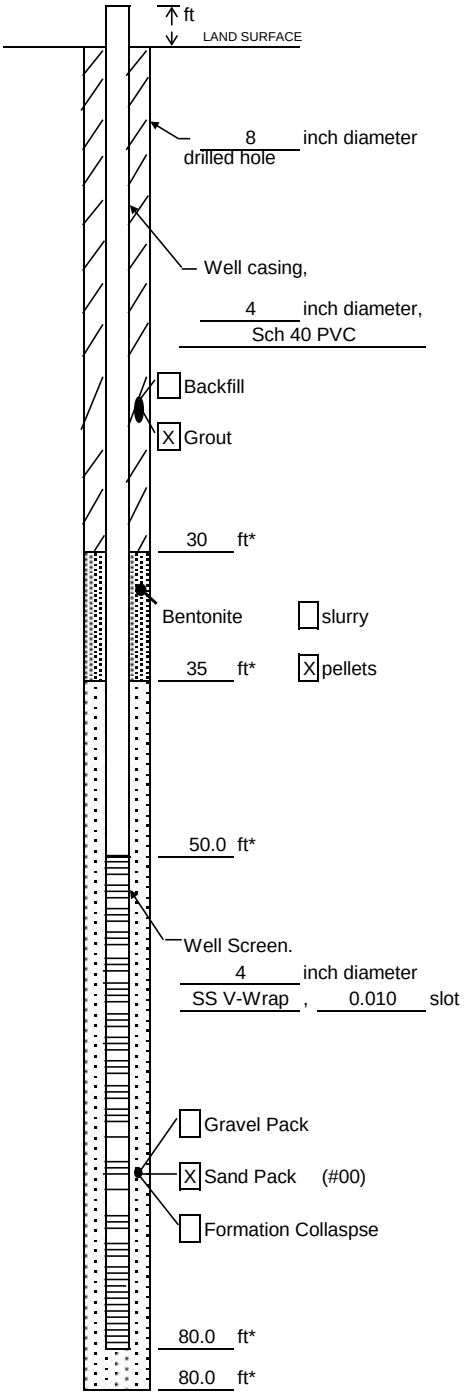

Measuring Point is
Top of Well Casing
Unless Otherwise Noted.

* Depth Below Land Surface

Project Raytheon - RA008 Well REW-10

Town/City Wayland

County _____ State MA

Permit No. _____

Land-Surface Elevation and Datum:

_____ feet ☐ Surveyed

☐ Estimated

Installation Date(s) 9-Oct-12

Drilling Method Rotosonic

Drilling Contractor Boart Longyear

Drilling Fluid Water

Development Technique(s) and Date(s)

Fluid Loss During Drilling < 100 gallons

Water Removed During Development _____ gallons

Static Depth to Water _____ feet below M.P.

Pumping Depth to Water _____ feet below M.P.

Pumping Duration _____ hours

Yield _____ gpm Date _____

Specific Capacity _____ gpm/ft

Well Purpose Extraction Well

Remarks _____

Prepared by Garth Norgren Hirsch

Well Construction Log

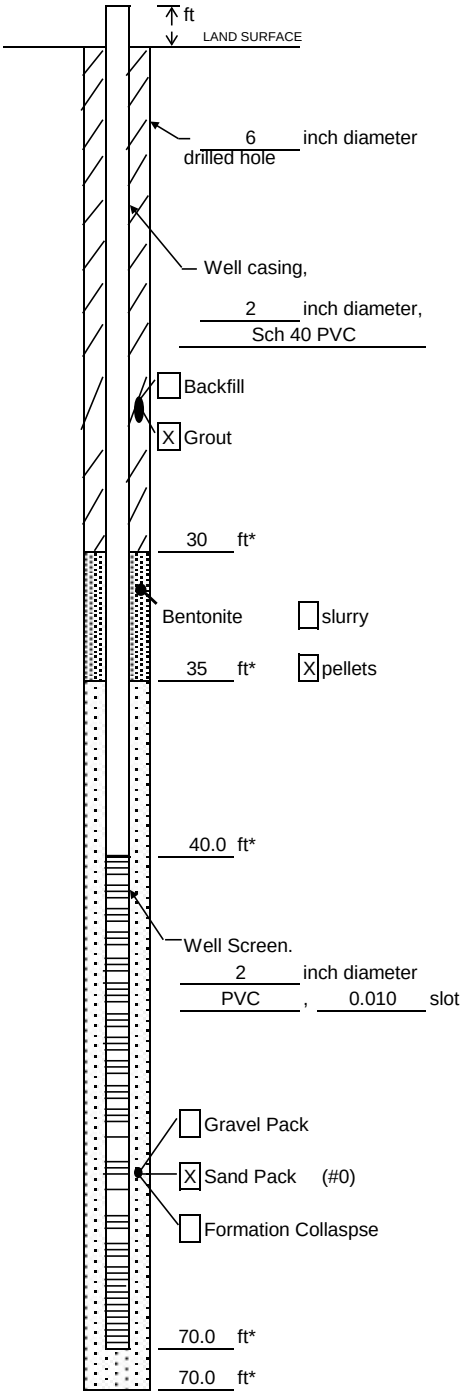

Measuring Point is
Top of Well Casing
Unless Otherwise Noted.

* Depth Below Land Surface

Project Raytheon - RA008 Well MW-563

Town/City Wayland

County _____ State MA

Permit No. _____

Land-Surface Elevation and Datum:

_____ feet ☐ Surveyed

☐ Estimated

Installation Date(s) 19-Oct-12

Drilling Method Rotosonic

Drilling Contractor Boart Longyear

Drilling Fluid Water

Development Technique(s) and Date(s)

17-Nov-11

Whale Submersible Pump

Fluid Loss During Drilling < 50 gallons

Water Removed During Development ~60 gallons

Static Depth to Water _____ feet below M.P.

Pumping Depth to Water _____ feet below M.P.

Pumping Duration _____ hours

Yield _____ gpm Date _____

Specific Capacity _____ gpm/ft

Well Purpose Monitoring Well

Remarks _____

Prepared by Garth Norgren Hirsch

TestAmerica

THE LEADER IN ENVIRONMENTAL TESTING

ANALYTICAL REPORT

TestAmerica Laboratories, Inc.
TestAmerica Westfield
Westfield Executive Park
53 Southampton Road
Westfield, MA 01085
Tel: (413)572-4000

TestAmerica Job ID: 360-43436-1
Client Project/Site: IDS Wayland

For:
Innovative Engineering Solutions, Inc
25 Spring Street
Walpole, Massachusetts 02081

Attn: Vicki Pariyar

Authorized for release by:
10/31/2012 10:55:11 AM
Joe Chimi
Report Production Representative
joe.chimi@testamericainc.com

Designee for

Becky Mason
Project Manager II
becky.mason@testamericainc.com

LINKS

Review your project results through TotalAccess

Have a Question? Ask The Expert

Visit us at: www.testamericainc.com

The test results in this report meet all 2003 NELAC and 2009 TNI requirements for accredited parameters, exceptions are noted in this report. This report may not be reproduced except in full, and with written approval from the laboratory. For questions please contact the Project Manager at the e-mail address or telephone number listed on this page.

This report has been electronically signed and authorized by the signatory. Electronic signature is intended to be the legally binding equivalent of a traditionally handwritten signature.

Results relate only to the items tested and the sample(s) as received by the laboratory.

Table of Contents

Cover Page 1
Table of Contents 2
Case Narrative 3
Detection Summary 5
Method Summary 6
Sample Summary 7
Client Sample Results 8
Definitions 13
QC Association 14
Surrogate Summary 15
QC Sample Results 16
Chronicle 21
Certification Summary 22
Receipt Checklists 24
Chain of Custody 25

MassDEP Analytical Protocol Certification Form

Laboratory Name:	**TestAmerica Westfield**	Project #:	**360-43436-1**
Project Location:	**IDS Wayland**	RTN:	

This form provides certifications for the following data set: list Laboratory Sample ID Number(s):

360-43436-(1-2)

Matrices: ☐ Groundwater/Surface Water ☒ Soil/Sediment ☐ Drinking Water ☐ Air ☐ Other:

CAM Protocols (check all that apply below):

8260 VOC CAM II A ☒	7470/7471 Hg CAM III B ☐	Mass DEP VPH CAM IV A ☐	8081 Pesticides CAM V B ☐	7196 Hex Cr CAM VI B ☐	Mass DEP APH CAM IX A ☐
8270 SVOC CAM II B ☐	7010 Metals CAM III C ☐	Mass DEP EPH CAM IV B ☐	8151 Herbicides CAM V C ☐	8330 Explosives CAM VIII A ☐	TO-15 VOC CAM IX B ☐
6010 Metals CAM III A ☐	6020 Metals CAM III D ☐	8082 PCB CAM V A ☐	9014 Total Cyanide/PAC CAM VI A ☐	6860 Perchlorate CAM VIII B ☐	

Affirmative Responses to Questions A through F are required for "Presumptive Certainty" status

A	Were all samples received in a condition consistent with those described on the Chain-of-Custody, properly preserved (including temperature) in the field or laboratory, and prepared/analyzed within method holding time.	☒ Yes ☐ No
B	Were the analytical method(s) and all associated QC requirements specified in the selected CAM protocol(s) followed?	☒ Yes ☐ No
C	Were all required corrective actions and analytical response actions specified in the selected CAM protocol(s) implemented for all identified performance standard non-conformances?	☒ Yes ☐ No
D	Does the laboratory report comply with all the reporting requirements specified in CAM VII A, "Quality Assurance and Quality Control Guidelines for the Acquisition and Reporting of Analytical Data"?	☒ Yes ☐ No
E	a. VPH, EPH and APH Methods only: Was each method conducted without significant modification(s)? (Refer to the individual method(s) for a list of significant modifications). b. APH and TO-15 Methods only: Was the complete analyte list reported for each method?	☐ Yes ☐ No ☐ Yes ☐ No
F	Were all applicable CAM protocol QC and performance standard non-conformances identified and evaluated in a laboratory narrative (including all "No" responses to Questions A through E)?	☒ Yes ☐ No

Responses to Questions G, H and I below are required for "Presumptive Certainty" status

G	Were the reporting limits at or below all CAM reporting limits specified in the selected CAM protocol(s)?	☐ Yes ☒ No[1]

Data User Note: ***Data that achieve "Presumptive Certainty" status may not necessarily meet the data usability and representativeness requirements described in 310 CMR 40. 1056 (2)(k) and WCS-07-350***

H	Were **all** QC performance standards specified in the CAM protocol(s) achieved?	☐ Yes ☒ No[1]
I	Were results reported for the complete analyte list specified in the selected CAM protocol(s) ?	☒ Yes ☐ No[1]

[1] All negative responses must be addressed in an attached laboratory narrative.

I, the undersigned, attest under the pains and penalties of perjury that, based upon my personal inquiry of those responsible for obtaining the information, the material contained in this analytical report is, to the best of my knowledge and belief, is accurate and complete.

Signature:		Position:	Laboratory Director
Printed Name:	Steven C. Hartmann	Date:	10/31/12 10:50

This form has been electronically signed and approved

Job ID: 360-43436-1

Laboratory: TestAmerica Westfield

Narrative

With the exceptions noted as flags or footnotes, standard analytical protocols were followed in the analysis of the samples and no problems were encountered or anomalies observed. In addition all laboratory quality control samples were within established control limits, with any exceptions noted below. Each sample was analyzed to achieve the lowest possible reporting limit within the constraints of the method. In some cases, due to interference or analytes present at high concentrations, samples were diluted. For diluted samples, the reporting limits are adjusted relative to the dilution required.

Calculations are performed before rounding to avoid round-off errors in calculated results.

All holding times were met and proper preservation noted for the methods performed on these samples, unless otherwise detailed in the individual sections below.

RECEIPT

The samples were received on 10/22/2012; the samples arrived in good condition, properly preserved and on ice. The temperature of the coolers at receipt was 4.2 C.

TestAmerica's Reporting Limits (RLs) for this report may not always meet client specified method reporting limits due to various reasons such as methodology, dilutions, matrix or moisture content (soils). TestAmerica's pivot table EDD documents which compound(s) exceed certain regulatory standards. If not included with your deliverables, please contact your Project Manager about the availability of this EDD for your report.

VOLATILE ORGANIC COMPOUNDS (GC-MS)

Samples SP-1 (360-43436-1) and SP-2 (360-43436-2) were analyzed for volatile organic compounds (GC-MS) in accordance with SW846 8260C. The samples were prepared and analyzed on 10/25/2012.

2-Butanone (MEK), 2-Hexanone and Chloroethane failed the recovery criteria low for LCS 360-97025/1-A. Methyl tert-butyl ether failed the recovery criteria high. 2-Butanone (MEK) and 2-Hexanone failed the recovery criteria low for LCSD 360-97025/2-A. 2,2-Dichloropropane failed the recovery criteria high. Refer to the QC report for details.

The calibration curve uses quadratic regression for Vinyl chloride, trans-1,2-Dichloroethene, Methyl tert-butyl ether, 2,2-Dichloropropane, Carbon tetrachloride, 1,1,1-Trichloroethane, 2-Butanone (MEK) and 4-Methyl-2-Pentanone (MIBK) as allowed by the method.

No other difficulties were encountered during the VOC analyses.

All other quality control parameters were within the acceptance limits.

PERCENT SOLIDS

Samples SP-1 (360-43436-1) and SP-2 (360-43436-2) were analyzed for percent solids in accordance with EPA Moisture. The samples were analyzed on 10/24/2012.

No difficulties were encountered during the % solids analyses.

All quality control parameters were within the acceptance limits.

Detection Summary

Client: Innovative Engineering Solutions, Inc
Project/Site: IDS Wayland

TestAmerica Job ID: 360-43436-1

Client Sample ID: SP-1 — Lab Sample ID: 360-43436-1

No Detections

Client Sample ID: SP-2 — Lab Sample ID: 360-43436-2

No Detections

Method Summary

Client: Innovative Engineering Solutions, Inc
Project/Site: IDS Wayland

TestAmerica Job ID: 360-43436-1

Method	Method Description	Protocol	Laboratory
8260C	Volatile Organic Compounds (GC/MS)	MA DEP	TAL WFD
Moisture	Percent Moisture	EPA	TAL WFD

Protocol References:

EPA = US Environmental Protection Agency

MA DEP = Massachusetts Department Of Environmental Protection

Laboratory References:

TAL WFD = TestAmerica Westfield, Westfield Executive Park, 53 Southampton Road, Westfield, MA 01085, TEL (413)572-4000

Sample Summary

Client: Innovative Engineering Solutions, Inc
Project/Site: IDS Wayland

TestAmerica Job ID: 360-43436-1

Lab Sample ID	Client Sample ID	Matrix	Collected	Received
360-43436-1	SP-1	Solid	10/19/12 14:15	10/22/12 16:10
360-43436-2	SP-2	Solid	10/19/12 14:30	10/22/12 16:10

Method: 8260C - Volatile Organic Compounds (GC/MS)

Client Sample ID: SP-1
Date Collected: 10/19/12 14:15
Date Received: 10/22/12 16:10

Lab Sample ID: 360-43436-1
Matrix: Solid
Percent Solids: 90.2

Analyte	Result	Qualifier	RL	MDL	Unit	D	Prepared	Analyzed	Dil Fac
1,1,1,2-Tetrachloroethane	ND		130		ug/Kg	☼	10/25/12 13:22	10/25/12 16:21	1
1,1,1-Trichloroethane	ND		130		ug/Kg	☼	10/25/12 13:22	10/25/12 16:21	1
1,1,2,2-Tetrachloroethane	ND		130		ug/Kg	☼	10/25/12 13:22	10/25/12 16:21	1
1,1,2-Trichloroethane	ND		130		ug/Kg	☼	10/25/12 13:22	10/25/12 16:21	1
1,1-Dichloroethane	ND		130		ug/Kg	☼	10/25/12 13:22	10/25/12 16:21	1
1,1-Dichloroethene	ND		130		ug/Kg	☼	10/25/12 13:22	10/25/12 16:21	1
1,1-Dichloropropene	ND		130		ug/Kg	☼	10/25/12 13:22	10/25/12 16:21	1
1,2,3-Trichlorobenzene	ND		130		ug/Kg	☼	10/25/12 13:22	10/25/12 16:21	1
1,2,3-Trichloropropane	ND		130		ug/Kg	☼	10/25/12 13:22	10/25/12 16:21	1
1,2,4-Trichlorobenzene	ND		130		ug/Kg	☼	10/25/12 13:22	10/25/12 16:21	1
1,2,4-Trimethylbenzene	ND		130		ug/Kg	☼	10/25/12 13:22	10/25/12 16:21	1
1,2-Dibromo-3-Chloropropane	ND		1300		ug/Kg	☼	10/25/12 13:22	10/25/12 16:21	1
1,2-Dichlorobenzene	ND		130		ug/Kg	☼	10/25/12 13:22	10/25/12 16:21	1
1,2-Dichloroethane	ND		130		ug/Kg	☼	10/25/12 13:22	10/25/12 16:21	1
1,2-Dichloropropane	ND		130		ug/Kg	☼	10/25/12 13:22	10/25/12 16:21	1
1,3,5-Trimethylbenzene	ND		130		ug/Kg	☼	10/25/12 13:22	10/25/12 16:21	1
1,3-Dichlorobenzene	ND		130		ug/Kg	☼	10/25/12 13:22	10/25/12 16:21	1
1,3-Dichloropropane	ND		130		ug/Kg	☼	10/25/12 13:22	10/25/12 16:21	1
1,4-Dichlorobenzene	ND		130		ug/Kg	☼	10/25/12 13:22	10/25/12 16:21	1
1,4-Dioxane	ND		13000		ug/Kg	☼	10/25/12 13:22	10/25/12 16:21	1
2,2-Dichloropropane	ND	*	130		ug/Kg	☼	10/25/12 13:22	10/25/12 16:21	1
2-Butanone (MEK)	ND	*	1300		ug/Kg	☼	10/25/12 13:22	10/25/12 16:21	1
2-Chlorotoluene	ND		130		ug/Kg	☼	10/25/12 13:22	10/25/12 16:21	1
2-Hexanone	ND	*	1300		ug/Kg	☼	10/25/12 13:22	10/25/12 16:21	1
4-Chlorotoluene	ND		130		ug/Kg	☼	10/25/12 13:22	10/25/12 16:21	1
4-Isopropyltoluene	ND		130		ug/Kg	☼	10/25/12 13:22	10/25/12 16:21	1
4-Methyl-2-pentanone (MIBK)	ND		1300		ug/Kg	☼	10/25/12 13:22	10/25/12 16:21	1
Acetone	ND		13000		ug/Kg	☼	10/25/12 13:22	10/25/12 16:21	1
Benzene	ND		130		ug/Kg	☼	10/25/12 13:22	10/25/12 16:21	1
Bromobenzene	ND		130		ug/Kg	☼	10/25/12 13:22	10/25/12 16:21	1
Bromoform	ND		130		ug/Kg	☼	10/25/12 13:22	10/25/12 16:21	1
Bromomethane	ND		260		ug/Kg	☼	10/25/12 13:22	10/25/12 16:21	1
Carbon disulfide	ND		130		ug/Kg	☼	10/25/12 13:22	10/25/12 16:21	1
Carbon tetrachloride	ND		130		ug/Kg	☼	10/25/12 13:22	10/25/12 16:21	1
Chlorobenzene	ND		130		ug/Kg	☼	10/25/12 13:22	10/25/12 16:21	1
Chlorobromomethane	ND		130		ug/Kg	☼	10/25/12 13:22	10/25/12 16:21	1
Chlorodibromomethane	ND		130		ug/Kg	☼	10/25/12 13:22	10/25/12 16:21	1
Chloroethane	ND	*	260		ug/Kg	☼	10/25/12 13:22	10/25/12 16:21	1
Chloroform	ND		130		ug/Kg	☼	10/25/12 13:22	10/25/12 16:21	1
Chloromethane	ND		260		ug/Kg	☼	10/25/12 13:22	10/25/12 16:21	1
cis-1,2-Dichloroethene	ND		130		ug/Kg	☼	10/25/12 13:22	10/25/12 16:21	1
cis-1,3-Dichloropropene	ND		130		ug/Kg	☼	10/25/12 13:22	10/25/12 16:21	1
Dibromomethane	ND		130		ug/Kg	☼	10/25/12 13:22	10/25/12 16:21	1
Dichlorobromomethane	ND		130		ug/Kg	☼	10/25/12 13:22	10/25/12 16:21	1
Dichlorodifluoromethane	ND		260		ug/Kg	☼	10/25/12 13:22	10/25/12 16:21	1
Ethyl ether	ND		130		ug/Kg	☼	10/25/12 13:22	10/25/12 16:21	1
Ethylbenzene	ND		130		ug/Kg	☼	10/25/12 13:22	10/25/12 16:21	1
Ethylene Dibromide	ND		130		ug/Kg	☼	10/25/12 13:22	10/25/12 16:21	1
Hexachlorobutadiene	ND		130		ug/Kg	☼	10/25/12 13:22	10/25/12 16:21	1
Isopropyl ether	ND		130		ug/Kg	☼	10/25/12 13:22	10/25/12 16:21	1
Isopropylbenzene	ND		130		ug/Kg	☼	10/25/12 13:22	10/25/12 16:21	1

Method: 8260C - Volatile Organic Compounds (GC/MS) (Continued)

Client Sample ID: SP-1 — **Lab Sample ID: 360-43436-1**
Date Collected: 10/19/12 14:15 — **Matrix: Solid**
Date Received: 10/22/12 16:10 — **Percent Solids: 90.2**

Analyte	Result	Qualifier	RL	MDL	Unit	D	Prepared	Analyzed	Dil Fac
m-Xylene & p-Xylene	ND		260		ug/Kg	☼	10/25/12 13:22	10/25/12 16:21	1
Methyl tert-butyl ether	ND	*	130		ug/Kg	☼	10/25/12 13:22	10/25/12 16:21	1
Methylene Chloride	ND		530		ug/Kg	☼	10/25/12 13:22	10/25/12 16:21	1
n-Butylbenzene	ND		130		ug/Kg	☼	10/25/12 13:22	10/25/12 16:21	1
N-Propylbenzene	ND		130		ug/Kg	☼	10/25/12 13:22	10/25/12 16:21	1
Naphthalene	ND		1300		ug/Kg	☼	10/25/12 13:22	10/25/12 16:21	1
o-Xylene	ND		130		ug/Kg	☼	10/25/12 13:22	10/25/12 16:21	1
sec-Butylbenzene	ND		130		ug/Kg	☼	10/25/12 13:22	10/25/12 16:21	1
Styrene	ND		130		ug/Kg	☼	10/25/12 13:22	10/25/12 16:21	1
Tert-amyl methyl ether	ND		130		ug/Kg	☼	10/25/12 13:22	10/25/12 16:21	1
Tert-butyl ethyl ether	ND		130		ug/Kg	☼	10/25/12 13:22	10/25/12 16:21	1
tert-Butylbenzene	ND		130		ug/Kg	☼	10/25/12 13:22	10/25/12 16:21	1
Tetrachloroethene	ND		130		ug/Kg	☼	10/25/12 13:22	10/25/12 16:21	1
Tetrahydrofuran	ND		2600		ug/Kg	☼	10/25/12 13:22	10/25/12 16:21	1
Toluene	ND		130		ug/Kg	☼	10/25/12 13:22	10/25/12 16:21	1
trans-1,2-Dichloroethene	ND		130		ug/Kg	☼	10/25/12 13:22	10/25/12 16:21	1
trans-1,3-Dichloropropene	ND		130		ug/Kg	☼	10/25/12 13:22	10/25/12 16:21	1
Trichloroethene	ND		130		ug/Kg	☼	10/25/12 13:22	10/25/12 16:21	1
Trichlorofluoromethane	ND		260		ug/Kg	☼	10/25/12 13:22	10/25/12 16:21	1
Vinyl chloride	ND		130		ug/Kg	☼	10/25/12 13:22	10/25/12 16:21	1

Surrogate	*%Recovery*	*Qualifier*	*Limits*	*Prepared*	*Analyzed*	*Dil Fac*
4-Bromofluorobenzene	*101*		*70 - 130*	*10/25/12 13:22*	*10/25/12 16:21*	*1*
Dibromofluoromethane	*105*		*70 - 130*	*10/25/12 13:22*	*10/25/12 16:21*	*1*
Toluene-d8 (Surr)	*106*		*70 - 130*	*10/25/12 13:22*	*10/25/12 16:21*	*1*

Client Sample ID: SP-2 — **Lab Sample ID: 360-43436-2**
Date Collected: 10/19/12 14:30 — **Matrix: Solid**
Date Received: 10/22/12 16:10 — **Percent Solids: 82.3**

Analyte	Result	Qualifier	RL	MDL	Unit	D	Prepared	Analyzed	Dil Fac
1,1,1,2-Tetrachloroethane	ND		160		ug/Kg	☼	10/25/12 13:22	10/25/12 16:44	1
1,1,1-Trichloroethane	ND		160		ug/Kg	☼	10/25/12 13:22	10/25/12 16:44	1
1,1,2,2-Tetrachloroethane	ND		160		ug/Kg	☼	10/25/12 13:22	10/25/12 16:44	1
1,1,2-Trichloroethane	ND		160		ug/Kg	☼	10/25/12 13:22	10/25/12 16:44	1
1,1-Dichloroethane	ND		160		ug/Kg	☼	10/25/12 13:22	10/25/12 16:44	1
1,1-Dichloroethene	ND		160		ug/Kg	☼	10/25/12 13:22	10/25/12 16:44	1
1,1-Dichloropropene	ND		160		ug/Kg	☼	10/25/12 13:22	10/25/12 16:44	1
1,2,3-Trichlorobenzene	ND		160		ug/Kg	☼	10/25/12 13:22	10/25/12 16:44	1
1,2,3-Trichloropropane	ND		160		ug/Kg	☼	10/25/12 13:22	10/25/12 16:44	1
1,2,4-Trichlorobenzene	ND		160		ug/Kg	☼	10/25/12 13:22	10/25/12 16:44	1
1,2,4-Trimethylbenzene	ND		160		ug/Kg	☼	10/25/12 13:22	10/25/12 16:44	1
1,2-Dibromo-3-Chloropropane	ND		1600		ug/Kg	☼	10/25/12 13:22	10/25/12 16:44	1
1,2-Dichlorobenzene	ND		160		ug/Kg	☼	10/25/12 13:22	10/25/12 16:44	1
1,2-Dichloroethane	ND		160		ug/Kg	☼	10/25/12 13:22	10/25/12 16:44	1
1,2-Dichloropropane	ND		160		ug/Kg	☼	10/25/12 13:22	10/25/12 16:44	1
1,3,5-Trimethylbenzene	ND		160		ug/Kg	☼	10/25/12 13:22	10/25/12 16:44	1
1,3-Dichlorobenzene	ND		160		ug/Kg	☼	10/25/12 13:22	10/25/12 16:44	1
1,3-Dichloropropane	ND		160		ug/Kg	☼	10/25/12 13:22	10/25/12 16:44	1
1,4-Dichlorobenzene	ND		160		ug/Kg	☼	10/25/12 13:22	10/25/12 16:44	1
1,4-Dioxane	ND		16000		ug/Kg	☼	10/25/12 13:22	10/25/12 16:44	1
2,2-Dichloropropane	ND	*	160		ug/Kg	☼	10/25/12 13:22	10/25/12 16:44	1

Method: 8260C - Volatile Organic Compounds (GC/MS) (Continued)

Client Sample ID: SP-2
Date Collected: 10/19/12 14:30
Date Received: 10/22/12 16:10

Lab Sample ID: 360-43436-2
Matrix: Solid
Percent Solids: 82.3

Analyte	Result	Qualifier	RL	MDL	Unit	D	Prepared	Analyzed	Dil Fac
2-Butanone (MEK)	ND	*	1600		ug/Kg	☼	10/25/12 13:22	10/25/12 16:44	1
2-Chlorotoluene	ND		160		ug/Kg	☼	10/25/12 13:22	10/25/12 16:44	1
2-Hexanone	ND	*	1600		ug/Kg	☼	10/25/12 13:22	10/25/12 16:44	1
4-Chlorotoluene	ND		160		ug/Kg	☼	10/25/12 13:22	10/25/12 16:44	1
4-Isopropyltoluene	ND		160		ug/Kg	☼	10/25/12 13:22	10/25/12 16:44	1
4-Methyl-2-pentanone (MIBK)	ND		1600		ug/Kg	☼	10/25/12 13:22	10/25/12 16:44	1
Acetone	ND		16000		ug/Kg	☼	10/25/12 13:22	10/25/12 16:44	1
Benzene	ND		160		ug/Kg	☼	10/25/12 13:22	10/25/12 16:44	1
Bromobenzene	ND		160		ug/Kg	☼	10/25/12 13:22	10/25/12 16:44	1
Bromoform	ND		160		ug/Kg	☼	10/25/12 13:22	10/25/12 16:44	1
Bromomethane	ND		320		ug/Kg	☼	10/25/12 13:22	10/25/12 16:44	1
Carbon disulfide	ND		160		ug/Kg	☼	10/25/12 13:22	10/25/12 16:44	1
Carbon tetrachloride	ND		160		ug/Kg	☼	10/25/12 13:22	10/25/12 16:44	1
Chlorobenzene	ND		160		ug/Kg	☼	10/25/12 13:22	10/25/12 16:44	1
Chlorobromomethane	ND		160		ug/Kg	☼	10/25/12 13:22	10/25/12 16:44	1
Chlorodibromomethane	ND		160		ug/Kg	☼	10/25/12 13:22	10/25/12 16:44	1
Chloroethane	ND	*	320		ug/Kg	☼	10/25/12 13:22	10/25/12 16:44	1
Chloroform	ND		160		ug/Kg	☼	10/25/12 13:22	10/25/12 16:44	1
Chloromethane	ND		320		ug/Kg	☼	10/25/12 13:22	10/25/12 16:44	1
cis-1,2-Dichloroethene	ND		160		ug/Kg	☼	10/25/12 13:22	10/25/12 16:44	1
cis-1,3-Dichloropropene	ND		160		ug/Kg	☼	10/25/12 13:22	10/25/12 16:44	1
Dibromomethane	ND		160		ug/Kg	☼	10/25/12 13:22	10/25/12 16:44	1
Dichlorobromomethane	ND		160		ug/Kg	☼	10/25/12 13:22	10/25/12 16:44	1
Dichlorodifluoromethane	ND		320		ug/Kg	☼	10/25/12 13:22	10/25/12 16:44	1
Ethyl ether	ND		160		ug/Kg	☼	10/25/12 13:22	10/25/12 16:44	1
Ethylbenzene	ND		160		ug/Kg	☼	10/25/12 13:22	10/25/12 16:44	1
Ethylene Dibromide	ND		160		ug/Kg	☼	10/25/12 13:22	10/25/12 16:44	1
Hexachlorobutadiene	ND		160		ug/Kg	☼	10/25/12 13:22	10/25/12 16:44	1
Isopropyl ether	ND		160		ug/Kg	☼	10/25/12 13:22	10/25/12 16:44	1
Isopropylbenzene	ND		160		ug/Kg	☼	10/25/12 13:22	10/25/12 16:44	1
m-Xylene & p-Xylene	ND		320		ug/Kg	☼	10/25/12 13:22	10/25/12 16:44	1
Methyl tert-butyl ether	ND	*	160		ug/Kg	☼	10/25/12 13:22	10/25/12 16:44	1
Methylene Chloride	ND		650		ug/Kg	☼	10/25/12 13:22	10/25/12 16:44	1
n-Butylbenzene	ND		160		ug/Kg	☼	10/25/12 13:22	10/25/12 16:44	1
N-Propylbenzene	ND		160		ug/Kg	☼	10/25/12 13:22	10/25/12 16:44	1
Naphthalene	ND		1600		ug/Kg	☼	10/25/12 13:22	10/25/12 16:44	1
o-Xylene	ND		160		ug/Kg	☼	10/25/12 13:22	10/25/12 16:44	1
sec-Butylbenzene	ND		160		ug/Kg	☼	10/25/12 13:22	10/25/12 16:44	1
Styrene	ND		160		ug/Kg	☼	10/25/12 13:22	10/25/12 16:44	1
Tert-amyl methyl ether	ND		160		ug/Kg	☼	10/25/12 13:22	10/25/12 16:44	1
Tert-butyl ethyl ether	ND		160		ug/Kg	☼	10/25/12 13:22	10/25/12 16:44	1
tert-Butylbenzene	ND		160		ug/Kg	☼	10/25/12 13:22	10/25/12 16:44	1
Tetrachloroethene	ND		160		ug/Kg	☼	10/25/12 13:22	10/25/12 16:44	1
Tetrahydrofuran	ND		3200		ug/Kg	☼	10/25/12 13:22	10/25/12 16:44	1
Toluene	ND		160		ug/Kg	☼	10/25/12 13:22	10/25/12 16:44	1
trans-1,2-Dichloroethene	ND		160		ug/Kg	☼	10/25/12 13:22	10/25/12 16:44	1
trans-1,3-Dichloropropene	ND		160		ug/Kg	☼	10/25/12 13:22	10/25/12 16:44	1
Trichloroethene	ND		160		ug/Kg	☼	10/25/12 13:22	10/25/12 16:44	1
Trichlorofluoromethane	ND		320		ug/Kg	☼	10/25/12 13:22	10/25/12 16:44	1
Vinyl chloride	ND		160		ug/Kg	☼	10/25/12 13:22	10/25/12 16:44	1

Method: 8260C - Volatile Organic Compounds (GC/MS) (Continued)

Surrogate	%Recovery	Qualifier	Limits	Prepared	Analyzed	Dil Fac
4-Bromofluorobenzene	101		70 - 130	10/25/12 13:22	10/25/12 16:44	1
Dibromofluoromethane	106		70 - 130	10/25/12 13:22	10/25/12 16:44	1
Toluene-d8 (Surr)	106		70 - 130	10/25/12 13:22	10/25/12 16:44	1

General Chemistry

Client Sample ID: SP-1 — **Lab Sample ID: 360-43436-1**
Date Collected: 10/19/12 14:15 — **Matrix: Solid**
Date Received: 10/22/12 16:10

Analyte	Result	Qualifier	RL	RL	Unit	D	Prepared	Analyzed	Dil Fac
Percent Moisture	9.8		1.0		%			10/24/12 17:02	1
Percent Solids	90		1.0		%			10/24/12 17:02	1

Client Sample ID: SP-2 — **Lab Sample ID: 360-43436-2**
Date Collected: 10/19/12 14:30 — **Matrix: Solid**
Date Received: 10/22/12 16:10

Analyte	Result	Qualifier	RL	RL	Unit	D	Prepared	Analyzed	Dil Fac
Percent Moisture	18		1.0		%			10/24/12 17:02	1
Percent Solids	82		1.0		%			10/24/12 17:02	1

Qualifiers

GC/MS VOA

Qualifier	Qualifier Description
*	LCS or LCSD exceeds the control limits

Glossary

Abbreviation	These commonly used abbreviations may or may not be present in this report.
☼	Listed under the "D" column to designate that the result is reported on a dry weight basis
%R	Percent Recovery
CNF	Contains no Free Liquid
DL, RA, RE, IN	Indicates a Dilution, Reanalysis, Re-extraction, or additional Initial metals/anion analysis of the sample
EDL	Estimated Detection Limit
EPA	United States Environmental Protection Agency
MDL	Method Detection Limit
ML	Minimum Level (Dioxin)
ND	Not detected at the reporting limit (or MDL or EDL if shown)
PQL	Practical Quantitation Limit
QC	Quality Control
RL	Reporting Limit
RPD	Relative Percent Difference, a measure of the relative difference between two points
TEF	Toxicity Equivalent Factor (Dioxin)
TEQ	Toxicity Equivalent Quotient (Dioxin)

QC Association Summary

Client: Innovative Engineering Solutions, Inc
Project/Site: IDS Wayland

TestAmerica Job ID: 360-43436-1

GC/MS VOA

Prep Batch: 97025

Lab Sample ID	Client Sample ID	Prep Type	Matrix	Method	Prep Batch
360-43436-1	SP-1	Total/NA	Solid	5035	
360-43436-2	SP-2	Total/NA	Solid	5035	
LCS 360-97025/1-A	Lab Control Sample	Total/NA	Solid	5035	
LCSD 360-97025/2-A	Lab Control Sample Dup	Total/NA	Solid	5035	
MB 360-97025/3-A	Method Blank	Total/NA	Solid	5035	

Analysis Batch: 97027

Lab Sample ID	Client Sample ID	Prep Type	Matrix	Method	Prep Batch
360-43436-1	SP-1	Total/NA	Solid	8260C	97025
360-43436-2	SP-2	Total/NA	Solid	8260C	97025
LCS 360-97025/1-A	Lab Control Sample	Total/NA	Solid	8260C	97025
LCSD 360-97025/2-A	Lab Control Sample Dup	Total/NA	Solid	8260C	97025
MB 360-97025/3-A	Method Blank	Total/NA	Solid	8260C	97025

General Chemistry

Analysis Batch: 96985

Lab Sample ID	Client Sample ID	Prep Type	Matrix	Method	Prep Batch
360-43436-1	SP-1	Total/NA	Solid	Moisture	
360-43436-2	SP-2	Total/NA	Solid	Moisture	

Surrogate Summary

Client: Innovative Engineering Solutions, Inc
Project/Site: IDS Wayland

TestAmerica Job ID: 360-43436-1

Method: 8260C - Volatile Organic Compounds (GC/MS)

Matrix: Solid **Prep Type: Total/NA**

		Percent Surrogate Recovery (Acceptance Limits)		
		BFB	DBFM	TOL
Lab Sample ID	Client Sample ID	(70-130)	(70-130)	(70-130)
360-43436-1	SP-1	101	105	106
360-43436-2	SP-2	101	106	106
LCS 360-97025/1-A	Lab Control Sample	105	109	105
LCSD 360-97025/2-A	Lab Control Sample Dup	104	105	104
MB 360-97025/3-A	Method Blank	102	108	109

Surrogate Legend

BFB = 4-Bromofluorobenzene

DBFM = Dibromofluoromethane

TOL = Toluene-d8 (Surr)

Method: 8260C - Volatile Organic Compounds (GC/MS)

Lab Sample ID: MB 360-97025/3-A
Matrix: Solid
Analysis Batch: 97027

Client Sample ID: Method Blank
Prep Type: Total/NA
Prep Batch: 97025

Analyte	MB Result	MB Qualifier	RL	MDL	Unit	D	Prepared	Analyzed	Dil Fac
1,1,1,2-Tetrachloroethane	ND		130		ug/Kg		10/25/12 13:22	10/25/12 15:58	1
1,1,1-Trichloroethane	ND		130		ug/Kg		10/25/12 13:22	10/25/12 15:58	1
1,1,2,2-Tetrachloroethane	ND		130		ug/Kg		10/25/12 13:22	10/25/12 15:58	1
1,1,2-Trichloroethane	ND		130		ug/Kg		10/25/12 13:22	10/25/12 15:58	1
1,1-Dichloroethane	ND		130		ug/Kg		10/25/12 13:22	10/25/12 15:58	1
1,1-Dichloroethene	ND		130		ug/Kg		10/25/12 13:22	10/25/12 15:58	1
1,1-Dichloropropene	ND		130		ug/Kg		10/25/12 13:22	10/25/12 15:58	1
1,2,3-Trichlorobenzene	ND		130		ug/Kg		10/25/12 13:22	10/25/12 15:58	1
1,2,3-Trichloropropane	ND		130		ug/Kg		10/25/12 13:22	10/25/12 15:58	1
1,2,4-Trichlorobenzene	ND		130		ug/Kg		10/25/12 13:22	10/25/12 15:58	1
1,2,4-Trimethylbenzene	ND		130		ug/Kg		10/25/12 13:22	10/25/12 15:58	1
1,2-Dibromo-3-Chloropropane	ND		1300		ug/Kg		10/25/12 13:22	10/25/12 15:58	1
1,2-Dichlorobenzene	ND		130		ug/Kg		10/25/12 13:22	10/25/12 15:58	1
1,2-Dichloroethane	ND		130		ug/Kg		10/25/12 13:22	10/25/12 15:58	1
1,2-Dichloropropane	ND		130		ug/Kg		10/25/12 13:22	10/25/12 15:58	1
1,3,5-Trimethylbenzene	ND		130		ug/Kg		10/25/12 13:22	10/25/12 15:58	1
1,3-Dichlorobenzene	ND		130		ug/Kg		10/25/12 13:22	10/25/12 15:58	1
1,3-Dichloropropane	ND		130		ug/Kg		10/25/12 13:22	10/25/12 15:58	1
1,4-Dichlorobenzene	ND		130		ug/Kg		10/25/12 13:22	10/25/12 15:58	1
1,4-Dioxane	ND		13000		ug/Kg		10/25/12 13:22	10/25/12 15:58	1
2,2-Dichloropropane	ND		130		ug/Kg		10/25/12 13:22	10/25/12 15:58	1
2-Butanone (MEK)	ND		1300		ug/Kg		10/25/12 13:22	10/25/12 15:58	1
2-Chlorotoluene	ND		130		ug/Kg		10/25/12 13:22	10/25/12 15:58	1
2-Hexanone	ND		1300		ug/Kg		10/25/12 13:22	10/25/12 15:58	1
4-Chlorotoluene	ND		130		ug/Kg		10/25/12 13:22	10/25/12 15:58	1
4-Isopropyltoluene	ND		130		ug/Kg		10/25/12 13:22	10/25/12 15:58	1
4-Methyl-2-pentanone (MIBK)	ND		1300		ug/Kg		10/25/12 13:22	10/25/12 15:58	1
Acetone	ND		13000		ug/Kg		10/25/12 13:22	10/25/12 15:58	1
Benzene	ND		130		ug/Kg		10/25/12 13:22	10/25/12 15:58	1
Bromobenzene	ND		130		ug/Kg		10/25/12 13:22	10/25/12 15:58	1
Bromoform	ND		130		ug/Kg		10/25/12 13:22	10/25/12 15:58	1
Bromomethane	ND		250		ug/Kg		10/25/12 13:22	10/25/12 15:58	1
Carbon disulfide	ND		130		ug/Kg		10/25/12 13:22	10/25/12 15:58	1
Carbon tetrachloride	ND		130		ug/Kg		10/25/12 13:22	10/25/12 15:58	1
Chlorobenzene	ND		130		ug/Kg		10/25/12 13:22	10/25/12 15:58	1
Chlorobromomethane	ND		130		ug/Kg		10/25/12 13:22	10/25/12 15:58	1
Chlorodibromomethane	ND		130		ug/Kg		10/25/12 13:22	10/25/12 15:58	1
Chloroethane	ND		250		ug/Kg		10/25/12 13:22	10/25/12 15:58	1
Chloroform	ND		130		ug/Kg		10/25/12 13:22	10/25/12 15:58	1
Chloromethane	ND		250		ug/Kg		10/25/12 13:22	10/25/12 15:58	1
cis-1,2-Dichloroethene	ND		130		ug/Kg		10/25/12 13:22	10/25/12 15:58	1
cis-1,3-Dichloropropene	ND		130		ug/Kg		10/25/12 13:22	10/25/12 15:58	1
Dibromomethane	ND		130		ug/Kg		10/25/12 13:22	10/25/12 15:58	1
Dichlorobromomethane	ND		130		ug/Kg		10/25/12 13:22	10/25/12 15:58	1
Dichlorodifluoromethane	ND		250		ug/Kg		10/25/12 13:22	10/25/12 15:58	1
Ethyl ether	ND		130		ug/Kg		10/25/12 13:22	10/25/12 15:58	1
Ethylbenzene	ND		130		ug/Kg		10/25/12 13:22	10/25/12 15:58	1
Ethylene Dibromide	ND		130		ug/Kg		10/25/12 13:22	10/25/12 15:58	1
Hexachlorobutadiene	ND		130		ug/Kg		10/25/12 13:22	10/25/12 15:58	1

Method: 8260C - Volatile Organic Compounds (GC/MS) (Continued)

Lab Sample ID: MB 360-97025/3-A
Matrix: Solid
Analysis Batch: 97027

Client Sample ID: Method Blank
Prep Type: Total/NA
Prep Batch: 97025

Analyte	MB Result	MB Qualifier	RL	MDL	Unit	D	Prepared	Analyzed	Dil Fac
Isopropyl ether	ND		130		ug/Kg		10/25/12 13:22	10/25/12 15:58	1
Isopropylbenzene	ND		130		ug/Kg		10/25/12 13:22	10/25/12 15:58	1
m-Xylene & p-Xylene	ND		250		ug/Kg		10/25/12 13:22	10/25/12 15:58	1
Methyl tert-butyl ether	ND		130		ug/Kg		10/25/12 13:22	10/25/12 15:58	1
Methylene Chloride	ND		500		ug/Kg		10/25/12 13:22	10/25/12 15:58	1
n-Butylbenzene	ND		130		ug/Kg		10/25/12 13:22	10/25/12 15:58	1
N-Propylbenzene	ND		130		ug/Kg		10/25/12 13:22	10/25/12 15:58	1
Naphthalene	ND		1300		ug/Kg		10/25/12 13:22	10/25/12 15:58	1
o-Xylene	ND		130		ug/Kg		10/25/12 13:22	10/25/12 15:58	1
sec-Butylbenzene	ND		130		ug/Kg		10/25/12 13:22	10/25/12 15:58	1
Styrene	ND		130		ug/Kg		10/25/12 13:22	10/25/12 15:58	1
Tert-amyl methyl ether	ND		130		ug/Kg		10/25/12 13:22	10/25/12 15:58	1
Tert-butyl ethyl ether	ND		130		ug/Kg		10/25/12 13:22	10/25/12 15:58	1
tert-Butylbenzene	ND		130		ug/Kg		10/25/12 13:22	10/25/12 15:58	1
Tetrachloroethene	ND		130		ug/Kg		10/25/12 13:22	10/25/12 15:58	1
Tetrahydrofuran	ND		2500		ug/Kg		10/25/12 13:22	10/25/12 15:58	1
Toluene	ND		130		ug/Kg		10/25/12 13:22	10/25/12 15:58	1
trans-1,2-Dichloroethene	ND		130		ug/Kg		10/25/12 13:22	10/25/12 15:58	1
trans-1,3-Dichloropropene	ND		130		ug/Kg		10/25/12 13:22	10/25/12 15:58	1
Trichloroethene	ND		130		ug/Kg		10/25/12 13:22	10/25/12 15:58	1
Trichlorofluoromethane	ND		250		ug/Kg		10/25/12 13:22	10/25/12 15:58	1
Vinyl chloride	ND		130		ug/Kg		10/25/12 13:22	10/25/12 15:58	1

Surrogate	*MB %Recovery*	*MB Qualifier*	*Limits*	*Prepared*	*Analyzed*	*Dil Fac*
4-Bromofluorobenzene	*102*		*70 - 130*	*10/25/12 13:22*	*10/25/12 15:58*	*1*
Dibromofluoromethane	*108*		*70 - 130*	*10/25/12 13:22*	*10/25/12 15:58*	*1*
Toluene-d8 (Surr)	*109*		*70 - 130*	*10/25/12 13:22*	*10/25/12 15:58*	*1*

Lab Sample ID: LCS 360-97025/1-A
Matrix: Solid
Analysis Batch: 97027

Client Sample ID: Lab Control Sample
Prep Type: Total/NA
Prep Batch: 97025

Analyte	Spike Added	LCS Result	LCS Qualifier	Unit	D	%Rec	%Rec. Limits
1,1,1,2-Tetrachloroethane	5000	4810		ug/Kg		96	70 - 130
1,1,1-Trichloroethane	5000	6080		ug/Kg		122	70 - 130
1,1,2,2-Tetrachloroethane	5000	4300		ug/Kg		86	70 - 130
1,1,2-Trichloroethane	5000	4670		ug/Kg		93	70 - 130
1,1-Dichloroethane	5000	6080		ug/Kg		122	70 - 130
1,1-Dichloroethene	5000	5040		ug/Kg		101	70 - 130
1,1-Dichloropropene	5000	5260		ug/Kg		105	70 - 130
1,2,3-Trichlorobenzene	5000	4050		ug/Kg		81	70 - 130
1,2,3-Trichloropropane	5000	5020		ug/Kg		100	70 - 130
1,2,4-Trichlorobenzene	5000	4370		ug/Kg		87	70 - 130
1,2,4-Trimethylbenzene	5000	5070		ug/Kg		101	70 - 130
1,2-Dibromo-3-Chloropropane	5000	5270		ug/Kg		105	70 - 130
1,2-Dichlorobenzene	5000	4350		ug/Kg		87	70 - 130
1,2-Dichloroethane	5000	5290		ug/Kg		106	70 - 130
1,2-Dichloropropane	5000	4320		ug/Kg		86	70 - 130
1,3,5-Trimethylbenzene	5000	4960		ug/Kg		99	70 - 130

Method: 8260C - Volatile Organic Compounds (GC/MS) (Continued)

Lab Sample ID: LCS 360-97025/1-A
Matrix: Solid
Analysis Batch: 97027

Client Sample ID: Lab Control Sample
Prep Type: Total/NA
Prep Batch: 97025

Analyte	Spike Added	LCS Result	LCS Qualifier	Unit	D	%Rec	%Rec. Limits
1,3-Dichlorobenzene	5000	4720		ug/Kg		94	70 - 130
1,3-Dichloropropane	5000	4900		ug/Kg		98	70 - 130
1,4-Dichlorobenzene	5000	4340		ug/Kg		87	70 - 130
1,4-Dioxane	50000	51200		ug/Kg		102	70 - 130
2,2-Dichloropropane	5000	6520		ug/Kg		130	70 - 130
2-Butanone (MEK)	50000	31400	*	ug/Kg		63	70 - 130
2-Chlorotoluene	5000	4730		ug/Kg		95	70 - 130
2-Hexanone	50000	34100	*	ug/Kg		68	70 - 130
4-Chlorotoluene	5000	4880		ug/Kg		98	70 - 130
4-Isopropyltoluene	5000	4940		ug/Kg		99	70 - 130
4-Methyl-2-pentanone (MIBK)	50000	42400		ug/Kg		85	70 - 130
Acetone	50000	46900		ug/Kg		94	70 - 130
Benzene	5000	4760		ug/Kg		95	70 - 130
Bromobenzene	5000	4670		ug/Kg		93	70 - 130
Bromoform	5000	4560		ug/Kg		91	70 - 130
Bromomethane	5000	3680		ug/Kg		74	70 - 130
Carbon disulfide	5000	5340		ug/Kg		107	70 - 130
Carbon tetrachloride	5000	6020		ug/Kg		120	70 - 130
Chlorobenzene	5000	4580		ug/Kg		92	70 - 130
Chlorobromomethane	5000	4820		ug/Kg		96	70 - 130
Chlorodibromomethane	5000	5020		ug/Kg		100	70 - 130
Chloroethane	5000	3310	*	ug/Kg		66	70 - 130
Chloroform	5000	5390		ug/Kg		108	70 - 130
Chloromethane	5000	4160		ug/Kg		83	70 - 130
cis-1,2-Dichloroethene	5000	5320		ug/Kg		106	70 - 130
cis-1,3-Dichloropropene	5000	4760		ug/Kg		95	70 - 130
Dibromomethane	5000	4740		ug/Kg		95	70 - 130
Dichlorobromomethane	5000	4970		ug/Kg		99	70 - 130
Dichlorodifluoromethane	5000	4410		ug/Kg		88	70 - 130
Ethyl ether	5000	4330		ug/Kg		87	70 - 130
Ethylbenzene	5000	4600		ug/Kg		92	70 - 130
Ethylene Dibromide	5000	4790		ug/Kg		96	70 - 130
Hexachlorobutadiene	5000	3750		ug/Kg		75	70 - 130
Isopropyl ether	5000	5440		ug/Kg		109	70 - 130
Isopropylbenzene	5000	5090		ug/Kg		102	70 - 130
m-Xylene & p-Xylene	10000	9460		ug/Kg		95	70 - 130
Methyl tert-butyl ether	5000	6870	*	ug/Kg		137	70 - 130
Methylene Chloride	5000	5360		ug/Kg		107	70 - 130
n-Butylbenzene	5000	4520		ug/Kg		90	70 - 130
N-Propylbenzene	5000	4780		ug/Kg		96	70 - 130
Naphthalene	5000	4430		ug/Kg		89	70 - 130
o-Xylene	5000	4940		ug/Kg		99	70 - 130
sec-Butylbenzene	5000	4830		ug/Kg		97	70 - 130
Styrene	5000	4770		ug/Kg		95	70 - 130
Tert-amyl methyl ether	5000	5220		ug/Kg		104	70 - 130
Tert-butyl ethyl ether	5000	6220		ug/Kg		124	70 - 130
tert-Butylbenzene	5000	4820		ug/Kg		96	70 - 130
Tetrachloroethene	5000	4920		ug/Kg		98	70 - 130
Tetrahydrofuran	50000	47800		ug/Kg		96	70 - 130
Toluene	5000	4770		ug/Kg		95	70 - 130

Method: 8260C - Volatile Organic Compounds (GC/MS) (Continued)

Lab Sample ID: LCS 360-97025/1-A
Matrix: Solid
Analysis Batch: 97027

Client Sample ID: Lab Control Sample
Prep Type: Total/NA
Prep Batch: 97025

Analyte	Spike Added	LCS Result	LCS Qualifier	Unit	D	%Rec	%Rec. Limits
trans-1,2-Dichloroethene	5000	5840		ug/Kg		117	70 - 130
trans-1,3-Dichloropropene	5000	5240		ug/Kg		105	70 - 130
Trichloroethene	5000	4600		ug/Kg		92	70 - 130
Trichlorofluoromethane	5000	5060		ug/Kg		101	70 - 130
Vinyl chloride	5000	4710		ug/Kg		94	70 - 130

Surrogate	*LCS %Recovery*	*LCS Qualifier*	*Limits*
4-Bromofluorobenzene	*105*		*70 - 130*
Dibromofluoromethane	*109*		*70 - 130*
Toluene-d8 (Surr)	*105*		*70 - 130*

Lab Sample ID: LCSD 360-97025/2-A
Matrix: Solid
Analysis Batch: 97027

Client Sample ID: Lab Control Sample Dup
Prep Type: Total/NA
Prep Batch: 97025

Analyte	Spike Added	LCSD Result	LCSD Qualifier	Unit	D	%Rec	%Rec. Limits	RPD	RPD Limit
1,1,1,2-Tetrachloroethane	5000	4720		ug/Kg		94	70 - 130	2	20
1,1,1-Trichloroethane	5000	6090		ug/Kg		122	70 - 130	0	20
1,1,2,2-Tetrachloroethane	5000	3930		ug/Kg		79	70 - 130	9	20
1,1,2-Trichloroethane	5000	4400		ug/Kg		88	70 - 130	6	20
1,1-Dichloroethane	5000	5990		ug/Kg		120	70 - 130	1	20
1,1-Dichloroethene	5000	4530		ug/Kg		91	70 - 130	11	20
1,1-Dichloropropene	5000	5180		ug/Kg		104	70 - 130	2	20
1,2,3-Trichlorobenzene	5000	3970		ug/Kg		79	70 - 130	2	20
1,2,3-Trichloropropane	5000	4790		ug/Kg		96	70 - 130	5	20
1,2,4-Trichlorobenzene	5000	4260		ug/Kg		85	70 - 130	2	20
1,2,4-Trimethylbenzene	5000	5090		ug/Kg		102	70 - 130	0	20
1,2-Dibromo-3-Chloropropane	5000	5040		ug/Kg		101	70 - 130	4	20
1,2-Dichlorobenzene	5000	4280		ug/Kg		86	70 - 130	2	20
1,2-Dichloroethane	5000	5170		ug/Kg		103	70 - 130	2	20
1,2-Dichloropropane	5000	4300		ug/Kg		86	70 - 130	1	20
1,3,5-Trimethylbenzene	5000	5010		ug/Kg		100	70 - 130	1	20
1,3-Dichlorobenzene	5000	4650		ug/Kg		93	70 - 130	1	20
1,3-Dichloropropane	5000	4880		ug/Kg		98	70 - 130	0	20
1,4-Dichlorobenzene	5000	4340		ug/Kg		87	70 - 130	0	20
1,4-Dioxane	50000	45600		ug/Kg		91	70 - 130	12	20
2,2-Dichloropropane	5000	6570	*	ug/Kg		131	70 - 130	1	20
2-Butanone (MEK)	50000	30000	*	ug/Kg		60	70 - 130	5	20
2-Chlorotoluene	5000	4820		ug/Kg		96	70 - 130	2	20
2-Hexanone	50000	33200	*	ug/Kg		66	70 - 130	3	20
4-Chlorotoluene	5000	4870		ug/Kg		97	70 - 130	0	20
4-Isopropyltoluene	5000	5040		ug/Kg		101	70 - 130	2	20
4-Methyl-2-pentanone (MIBK)	50000	39200		ug/Kg		78	70 - 130	8	20
Acetone	50000	44600		ug/Kg		89	70 - 130	5	20
Benzene	5000	4740		ug/Kg		95	70 - 130	0	20
Bromobenzene	5000	4640		ug/Kg		93	70 - 130	1	20
Bromoform	5000	4280		ug/Kg		86	70 - 130	6	20
Bromomethane	5000	3910		ug/Kg		78	70 - 130	6	20
Carbon disulfide	5000	5050		ug/Kg		101	70 - 130	6	20

Method: 8260C - Volatile Organic Compounds (GC/MS) (Continued)

Lab Sample ID: LCSD 360-97025/2-A
Matrix: Solid
Analysis Batch: 97027

Client Sample ID: Lab Control Sample Dup
Prep Type: Total/NA
Prep Batch: 97025

Analyte	Spike Added	LCSD Result	LCSD Qualifier	Unit	D	%Rec	%Rec. Limits	RPD	RPD Limit
Carbon tetrachloride	5000	6060		ug/Kg		121	70 - 130	1	20
Chlorobenzene	5000	4530		ug/Kg		91	70 - 130	1	20
Chlorobromomethane	5000	4650		ug/Kg		93	70 - 130	4	20
Chlorodibromomethane	5000	4880		ug/Kg		98	70 - 130	3	20
Chloroethane	5000	3920		ug/Kg		78	70 - 130	17	20
Chloroform	5000	5290		ug/Kg		106	70 - 130	2	20
Chloromethane	5000	4300		ug/Kg		86	70 - 130	3	20
cis-1,2-Dichloroethene	5000	5220		ug/Kg		104	70 - 130	2	20
cis-1,3-Dichloropropene	5000	4710		ug/Kg		94	70 - 130	1	20
Dibromomethane	5000	4510		ug/Kg		90	70 - 130	5	20
Dichlorobromomethane	5000	4920		ug/Kg		98	70 - 130	1	20
Dichlorodifluoromethane	5000	4680		ug/Kg		94	70 - 130	6	20
Ethyl ether	5000	4080		ug/Kg		82	70 - 130	6	20
Ethylbenzene	5000	4610		ug/Kg		92	70 - 130	0	20
Ethylene Dibromide	5000	4670		ug/Kg		93	70 - 130	3	20
Hexachlorobutadiene	5000	3790		ug/Kg		76	70 - 130	1	20
Isopropyl ether	5000	5150		ug/Kg		103	70 - 130	5	20
Isopropylbenzene	5000	5110		ug/Kg		102	70 - 130	0	20
m-Xylene & p-Xylene	10000	9530		ug/Kg		95	70 - 130	1	20
Methyl tert-butyl ether	5000	6340		ug/Kg		127	70 - 130	8	20
Methylene Chloride	5000	5110		ug/Kg		102	70 - 130	5	20
n-Butylbenzene	5000	4470		ug/Kg		89	70 - 130	1	20
N-Propylbenzene	5000	4830		ug/Kg		97	70 - 130	1	20
Naphthalene	5000	4420		ug/Kg		88	70 - 130	0	20
o-Xylene	5000	4910		ug/Kg		98	70 - 130	1	20
sec-Butylbenzene	5000	4930		ug/Kg		99	70 - 130	2	20
Styrene	5000	4790		ug/Kg		96	70 - 130	0	20
Tert-amyl methyl ether	5000	4910		ug/Kg		98	70 - 130	6	20
Tert-butyl ethyl ether	5000	5800		ug/Kg		116	70 - 130	7	20
tert-Butylbenzene	5000	4960		ug/Kg		99	70 - 130	3	20
Tetrachloroethene	5000	5070		ug/Kg		101	70 - 130	3	20
Tetrahydrofuran	50000	44900		ug/Kg		90	70 - 130	6	20
Toluene	5000	4800		ug/Kg		96	70 - 130	0	20
trans-1,2-Dichloroethene	5000	5690		ug/Kg		114	70 - 130	3	20
trans-1,3-Dichloropropene	5000	5070		ug/Kg		101	70 - 130	3	20
Trichloroethene	5000	4610		ug/Kg		92	70 - 130	0	20
Trichlorofluoromethane	5000	5290		ug/Kg		106	70 - 130	5	20
Vinyl chloride	5000	4820		ug/Kg		96	70 - 130	2	20

Surrogate	*LCSD %Recovery*	*LCSD Qualifier*	*Limits*
4-Bromofluorobenzene	*104*		*70 - 130*
Dibromofluoromethane	*105*		*70 - 130*
Toluene-d8 (Surr)	*104*		*70 - 130*

Lab Chronicle

Client: Innovative Engineering Solutions, Inc
Project/Site: IDS Wayland

TestAmerica Job ID: 360-43436-1

Client Sample ID: SP-1

Lab Sample ID: 360-43436-1

Date Collected: 10/19/12 14:15
Matrix: Solid
Date Received: 10/22/12 16:10
Percent Solids: 90.2

Prep Type	Batch Type	Batch Method	Run	Dilution Factor	Batch Number	Prepared or Analyzed	Analyst	Lab
Total/NA	Prep	5035			97025	10/25/12 13:22	CMR	TAL WFD
Total/NA	Analysis	8260C		1	97027	10/25/12 16:21	CMR	TAL WFD
Total/NA	Analysis	Moisture		1	96985	10/24/12 17:02	BH	TAL WFD

Client Sample ID: SP-2

Lab Sample ID: 360-43436-2

Date Collected: 10/19/12 14:30
Matrix: Solid
Date Received: 10/22/12 16:10
Percent Solids: 82.3

Prep Type	Batch Type	Batch Method	Run	Dilution Factor	Batch Number	Prepared or Analyzed	Analyst	Lab
Total/NA	Prep	5035			97025	10/25/12 13:22	CMR	TAL WFD
Total/NA	Analysis	8260C		1	97027	10/25/12 16:44	CMR	TAL WFD
Total/NA	Analysis	Moisture		1	96985	10/24/12 17:02	BH	TAL WFD

Laboratory References:

TAL WFD = TestAmerica Westfield, Westfield Executive Park, 53 Southampton Road, Westfield, MA 01085, TEL (413)572-4000

Certification Summary

Client: Innovative Engineering Solutions, Inc
Project/Site: IDS Wayland

TestAmerica Job ID: 360-43436-1

Laboratory: TestAmerica Westfield

All certifications held by this laboratory are listed. Not all certifications are applicable to this report.

Authority	Program	EPA Region	Certification ID	Expiration Date
Connecticut	State Program	1	PH-0494	09-30-14
Maine	State Program	1	MA00014	05-03-13
Massachusetts	State Program	1	M-MA014	06-30-13
New Hampshire	NELAC	1	2539	08-08-13
Rhode Island	State Program	1	LAO00057	12-30-12
Vermont	State Program	1	VT-10843	11-18-12

State Accreditation Matrix

Method Name	Description	Primary Accreditation	
		New Hampshire (NELAC)	Mass
180.1	Turbidity, Nephelometric	P	P
245.1	Mercury (CVAA)	NP/P	NP
300	Anions, Ion Chromatography	NP/P	NP/P
410.4	COD	NP	NP
524.2	Volatile Org Comp (GC/MS)(list upon request)	P	P
524.2	Trihalomethane compounds	P	P
608	Organochlorine Pest/PCBs (list upon request)	NP	NP
624	Volatile Org Comp (GC/MS)(list upon request)	NP	NP
625	Semivolatile Org Comp (GC/MS)(list upon request)	NP	NP
1010	Ignitability, Pensky-Martens Closed-Cup Method	SW	
1103.1	E.coli		ambient/source
3546	Microwave Extraction	SW	
5035	Closed System Purge and Trap	SW	
6020	Metals (ICP/MS) (list upon request)	NP	
10-107-06-2	Nitrogen, Total Kjeldahl	NP	NP
200.7 Rev 4.4	Metals (ICP)(list upon request)	NP/P	NP/P
200.8 Rev 5.4	Metals (ICP/MS) (list upon request)	NP/P	NP/P
3005A	Preparation, Total Recoverable or Dissolved Metals	NP/P	
3010A	Preparation, Total Metals	NP/P	
3020A	Preparation, Total Metals	NP/P	
3050B	Preparation, Metals	SW	
3510C	Liquid-Liquid Extraction (Separatory Funnel)	NP	
5030B	Purge and Trap	NP	
6010C	Metals (ICP)(list upon request)	NP/SW	
7196A	Chromium, Hexavalent	NP/SW	
7470A	Mercury (CVAA)	NP	
7471A	Mercury (CVAA)	SW	
8081B	Organochlorine Pesticides (GC)(list upon request)	NP/SW	
8082A	PCBs by Gas Chromatography(list upon request)	NP/SW	
8260C	Volatile Org Comp. (GC/MS)(list upon request)	NP/SW	
8270D	Semivolatile Comp.(GC/MS)(list upon request)	NP/SW	
9012A	Cyanide, Total and/or Amenable	NP/SW	
9030B	Sulfide, Distillation (Acid Soluble and Insoluble)	NP	
9045C	pH	SW	
CT ETPH	Conn - Ext. Total petroleum Hydrocarbons (GC)	NP/SW	
Enterolert	Enterococcus		ambient/source
L107041C	Nitrogen, Nitrate	NP	
L107-06-1B	Nitrogen Ammonia	NP	NP
L204001A CN	Cyanide, Total	P	NP/P
L210-001A	Phenolics, Total Recoverable	NP	NP
MA-EPH	Mass - Extractable Petroleum Hydrocarbons (GC)	NP/SW	
MAVPH	Mass - Volatile Petroleum Hydrocarbons (GC)	NP/SW	
SM 2320B	Alkalinity	NP/P	NP/P
SM 2340B	Total Hardness (as CaCO3) by calculation	NP/P	NP
SM 2510B	Conductivity, Specific Conductance	NP/P	NP/P
SM 2540C	Solids, Total Dissolved (TDS)	NP/P	NP/P
SM 2540D	Solids, Total Suspended (TSS)	NP	NP
SM 3500 CR D	Chromium, Hexavalent	NP	
SM 4500 Cl F	Chlorine, Residual		NP
SM 4500 H+ B	pH	NP/P	NP/P
SM 4500 NO2 B	Nitrogen, Nitrite	NP	P
SM 4500 P E	Phosphorus, Orthophosphate	NP/P	NP
SM 4500 P E	Phosphorus, Total	NP	NP
SM 4500 S2 D	Sulfide, Total	NP	
SM 5210B	BOD, 5-Day	NP	NP
SM 5310B	Organic Carbon, Total (TOC)	NP/P	NP
SM 9215E	Heterotrophic Plate Count (SimPlate)		P
SM 9222D	Coliforms, Fecal (Membrane Filter)		NP
SM 9223	Coliforms, Total, and E.Coli (Colilert-P/A)		P
SM 9223	Coliforms, Total, and E.Coli (Enumeration)		P

Not all organic compounds are accreditied under YNI
For methods with multiple compounds all compounds may not meet TNI criteria, a listing should be obtained from the laboratory

The lab carries additional accreditations with several states. This is the laboratories typcial listing but is subject to change based on the laboratories current certification standing.

Login Sample Receipt Checklist

Client: Innovative Engineering Solutions, Inc

Job Number: 360-43436-1

Login Number: 43436

List Source: TestAmerica Westfield

List Number: 1

Creator: Kolb, Chris M

Question	Answer	Comment
Radioactivity wasn't checked or is </= background as measured by a survey meter.	N/A	
The cooler's custody seal, if present, is intact.	True	
Sample custody seals, if present, are intact.	True	
The cooler or samples do not appear to have been compromised or tampered with.	True	
Samples were received on ice.	True	
Cooler Temperature is acceptable.	True	
Cooler Temperature is recorded.	True	
COC is present.	True	
COC is filled out in ink and legible.	True	
COC is filled out with all pertinent information.	True	
Is the Field Sampler's name present on COC?	True	
There are no discrepancies between the containers received and the COC.	True	
Samples are received within Holding Time.	True	
Sample containers have legible labels.	True	
Containers are not broken or leaking.	True	
Sample collection date/times are provided.	True	
Appropriate sample containers are used.	True	
Sample bottles are completely filled.	True	
Sample Preservation Verified.	True	
There is sufficient vol. for all requested analyses, incl. any requested MS/MSDs	True	
Containers requiring zero headspace have no headspace or bubble is <6mm (1/4").	N/A	
Multiphasic samples are not present.	True	
Samples do not require splitting or compositing.	True	
Residual Chlorine Checked.	N/A	

TestAmerica Westfield
Westfield Executive Park 53 Southampton Road
Westfield, MA 01085
Phone (413) 572-4000 Fax (413) 572-3707

Boston Service Center
240 Bear Hill Rd. Suite 104
Waltham, MA 02451
Phone (781) 466-6900 Fax (781) 466-6901

Chain of Custody Record

TestAmerica
THE LEADER IN ENVIRONMENTAL TESTING

10/31/2012

Client Information				
Client Contact: Garth Hirsch	Sampler: Garth Hirsch	Lab PM:	Carrier Tracking No(s):	COC No: 21877
	Phone: 339-222-2117	E-Mail:		Page: 1
Company: IES				Job #: 360-43436
Address: 25 Spring Street	Due Date Requested:			
City: Walpole	TAT Requested (days): 5			
State, Zip: Ma, 02081				
Phone: 339-222-2117	Quote #:			
Email: V.pariyar@asiaalpha.com	PO #: RA008			
Project Name/number: RA008	WO #: RA008			
Site: Raytheon/Wayland	SSOW#:			

Analysis Requested

Preservation Codes:
A - HCL; B - NaOH; C - Zn Acetate; D - Nitric Acid; E - NaHSO4; F - MeOH; H - Ascorbic Acid; I - Ice; J - DI Water; M - Hexane; N - None; P - Na2O4S; Q - Na2SO3; R - Na2S2SO3; S - H2SO4; Z - other (specify)

Regulatory programs:
MCP [X] GW1/S1 [X]
RCP [ ] CT RSR [ ]
DEP Form [ ] EDD Required [X]

Sample Identification	Sample Date	Sample Time	Sample Type (C=comp, G=grab)	Matrix (W=water, S=solid, O=waste/oil, BT=Tissue, A=Air)	Sampler's Initials	Field Filtered Sample?	Perform MS/MSD?	8260	Total Number of containers	Special Instructions/Note:
			Preservation Code:							
SP-1	10/19/12	1415	G	S	[illegible]	–	–	✓	2	
SP-2	10/19/12	1430	G	S	[illegible]	–	–	✓	2	

Possible Hazard Identification
[X] Non-Hazard [ ] Flammable [ ] Skin Irritant [ ] Poison B [ ] Unknown [ ] Radiological

Sample Disposal (A fee may be assessed if samples are retained longer than 1 month)
[ ] Return To Client [X] Disposal By Lab [ ] Archive For ____ Months

Deliverable Requested: I, II, III, IV, Other (specify)

Special Instructions/QC Requirements:

Relinquished by:	Date/Time:	Company	Received by:	Date/Time:	Company
[signature]	10/19/12 15:13	IES	[signature]	10/19/12 1513	TAC
[signature]	10/22/12 1400		[signature]	10-22-12 1400	
[signature]	10-22-12 1610		[signature]	10/22/12 1610	TA

Custody Seals Intact: Δ Yes Δ No
Custody Seal No.:
Cooler Temperature(s) °C and Other Remarks: 4.2 ICE

TAL-8245-360 1111

TestAmerica

THE LEADER IN ENVIRONMENTAL TESTING

ANALYTICAL REPORT

TestAmerica Laboratories, Inc.
TestAmerica Buffalo
10 Hazelwood Drive
Amherst, NY 14228-2298
Tel: (716)691-2600

TestAmerica Job ID: 480-29929-1
Client Project/Site: IDS Wayland

For:
Innovative Engineering Solutions, Inc
25 Spring Street
Walpole, Massachusetts 02081

Attn: Vicki Pariyar

Authorized for release by:
12/14/2012 4:03:51 PM
Chris Reynolds
QA Manager
chris.reynolds@testamericainc.com

Designee for

Becky Mason
Project Manager II
becky.mason@testamericainc.com

LINKS

Review your project results through TotalAccess

Have a Question? Ask The Expert

Visit us at: www.testamericainc.com

The test results in this report meet all 2003 NELAC and 2009 TNI requirements for accredited parameters, exceptions are noted in this report. This report may not be reproduced except in full, and with written approval from the laboratory. For questions please contact the Project Manager at the e-mail address or telephone number listed on this page.

This report has been electronically signed and authorized by the signatory. Electronic signature is intended to be the legally binding equivalent of a traditionally handwritten signature.

Results relate only to the items tested and the sample(s) as received by the laboratory.

Table of Contents

Cover Page 1
Table of Contents 2
Definitions/Glossary 3
Case Narrative 4
Detection Summary 7
Client Sample Results 9
Surrogate Summary 27
QC Sample Results 28
QC Association Summary 44
Lab Chronicle 45
Certification Summary 47
Method Summary 48
Sample Summary 49
Receipt Checklists 50
Chain of Custody 51

Qualifiers

GC/MS VOA

Qualifier	Qualifier Description
*	RPD of the LCS and LCSD exceeds the control limits
*	LCS or LCSD exceeds the control limits

Glossary

Abbreviation	These commonly used abbreviations may or may not be present in this report.
☼	Listed under the "D" column to designate that the result is reported on a dry weight basis
%R	Percent Recovery
CNF	Contains no Free Liquid
DER	Duplicate error ratio (normalized absolute difference)
DL, RA, RE, IN	Indicates a Dilution, Reanalysis, Re-extraction, or additional Initial metals/anion analysis of the sample
DLC	Decision level concentration
EDL	Estimated Detection Limit
EPA	United States Environmental Protection Agency
MDA	Minimum detectable activity
MDC	Minimum detectable concentration
MDL	Method Detection Limit
ML	Minimum Level (Dioxin)
ND	Not detected at the reporting limit (or MDL or EDL if shown)
PQL	Practical Quantitation Limit
QC	Quality Control
RER	Relative error ratio
RL	Reporting Limit or Requested Limit (Radiochemistry)
RPD	Relative Percent Difference, a measure of the relative difference between two points
TEF	Toxicity Equivalent Factor (Dioxin)
TEQ	Toxicity Equivalent Quotient (Dioxin)

Job ID: 480-29929-1

Laboratory: TestAmerica Buffalo

Narrative

With the exceptions noted as flags or footnotes, standard analytical protocols were followed in the analysis of the samples and no problems were encountered or anomalies observed. In addition all laboratory quality control samples were within established control limits, with any exceptions noted below. Each sample was analyzed to achieve the lowest possible reporting limit within the constraints of the method. In some cases, due to interference or analytes present at high concentrations, samples were diluted. For diluted samples, the reporting limits are adjusted relative to the dilution required.

Calculations are performed before rounding to avoid round-off errors in calculated results.

All holding times were met and proper preservation noted for the methods performed on these samples, unless otherwise detailed in the individual sections below.

RECEIPT

The samples were received on 12/11/2012; the samples arrived in good condition, properly preserved and on ice. The temperature of the coolers at receipt was 4.3 C.

Note: All samples that require thermal preservation are considered acceptable if the arrival temperature is within the method's specified temperature range or for general analysis, ranging from 6°C to just above the freezing temperature of water. Samples that are hand delivered, immediately following collection, may not meet these criteria; however, they will be considered acceptable according to NELAC and State standards, if there is evidence that the chilling process has begun, such as stored and transported to the laboratory on ice.

VOLATILE ORGANIC COMPOUNDS (GC-MS SIM)

Samples REW-6-20121209-1 (480-29929-1), REW-7-20121209-1 (480-29929-2), REW-8-20121209-1 (480-29929-3), REW-9-20121209-1 (480-29929-4), REW-10-20121209-1 (480-29929-5), REW-11-20121209-1 (480-29929-6), REW-12-20121209-1 (480-29929-7), MW-563-20121209-1 (480-29929-8), DUPX-20121209-1 (480-29929-9) and TRIP BLANK (480-29929-10) were analyzed for volatile organic compounds (GC-MS SIM) in accordance with EPA SW-846 Method 8260B SIM. The samples were analyzed on 12/13/2012.

No difficulties were encountered during the VOA SIM analyses.

All quality control parameters were within the acceptance limits.

VOLATILE ORGANIC COMPOUNDS (GC-MS)

Samples REW-6-20121209-1 (480-29929-1), REW-7-20121209-1 (480-29929-2), REW-8-20121209-1 (480-29929-3), REW-9-20121209-1 (480-29929-4), REW-10-20121209-1 (480-29929-5), REW-11-20121209-1 (480-29929-6), REW-12-20121209-1 (480-29929-7), MW-563-20121209-1 (480-29929-8), DUPX-20121209-1 (480-29929-9) and TRIP BLANK (480-29929-10) were analyzed for volatile organic compounds (GC-MS) in accordance with SW846 8260C. The samples were analyzed on 12/12/2012 and 12/13/2012.

2-Butanone (MEK) failed the recovery criteria high for LCS 480-95390/4 and LCSD 480-95390/5. Acetone exceeded the rpd limit.

2-Butanone (MEK) failed the recovery criteria high for LCS 480-95590/4. 2-Butanone (MEK) and Dichlorodifluoromethane failed the recovery criteria high for LCSD 480-95590/5. 1,4-Dioxane exceeded the rpd limit. Refer to the QC report for details.

Samples REW-6-20121209-1 (480-29929-1)[10X], REW-7-20121209-1 (480-29929-2)[10X], REW-8-20121209-1 (480-29929-3)[5X], REW-11-20121209-1 (480-29929-6)[10X], REW-11-20121209-1 (480-29929-6)[20X], REW-12-20121209-1 (480-29929-7)[4X], MW-563-20121209-1 (480-29929-8)[5X] and DUPX-20121209-1 (480-29929-9)[5X] required dilution prior to analysis to bring the concentration of target analytes within the calibration range. The reporting limits have been adjusted accordingly.

The continuing calibration verification (CCV) for Carbon Disulfide and Dichlorodifluoromethane in batch 95291 recovered above the MCP upper control limit. MCP protocol allows for 20% of the target compounds to be outside the 20% difference but not over 40% difference.

The continuing calibration verification (CCV) for Carbon Disulfide, Chloroethane and Trichlorofluoromethane associated with batch 95390 recovered above the MCP upper control limit. 1,4-Dioxane associated with batch 95390 recovered above the MCP upper control limit also. MCP protocol allows for 20% of the target compounds to be outside the 20% difference but not over 40% difference.

The continuing calibration verification (CCV) for Dichlorodifluoromethane and 1,2-dichloroethane-d4 associated with batch 95590

Job ID: 480-29929-1 (Continued)

Laboratory: TestAmerica Buffalo (Continued)

recovered above the MCP upper control limit. MCP protocol allows for 20% of the target compounds to be outside the 20% difference but not over 40% difference.

No other difficulties were encountered during the volatile organic compounds (GC-MS) analyses.

All other quality control parameters were within the acceptance limits.

MassDEP Analytical Protocol Certification Form

Laboratory Name: **TestAmerica Buffalo** Project #: **480-29929-1**

Project Location: **Wayland** RTN:

This form provides certifications for the following data set: list Laboratory Sample ID Number(s):

480-29929-1[1-10]

Matrices: [X] Groundwater/Surface Water [ ] Soil/Sediment [ ] Drinking Water [ ] Air [ ] Other:

CAM Protocols (check all that apply below):

8260 VOC CAM II A [X]	7470/7471 Hg CAM III B [ ]	Mass DEP VPH CAM IV A [ ]	8081 Pesticides CAM V B [ ]	7196 Hex Cr CAM VI B [ ]	Mass DEP APH CAM IX A [ ]
8270 SVOC CAM II B [ ]	7010 Metals CAM III C [ ]	Mass DEP EPH CAM IV B [ ]	8151 Herbicides CAM V C [ ]	8330 Explosives CAM VIII A [ ]	TO-15 VOC CAM IX B [ ]
6010 Metals CAM III A [ ]	6020 Metals CAM III D [ ]	8082 PCB CAM V A [ ]	9014 Total Cyanide/PAC CAM VI A [ ]	6860 Perchlorate CAM VIII B [ ]	

Affirmative Responses to Questions A through F are required for "Presumptive Certainty" status

A	Were all samples received in a condition consistent with those described on the Chain-of-Custody, properly preserved (including temperature) in the field or laboratory, and prepared/analyzed within method holding time.	[X] Yes [ ] No
B	Were the analytical method(s) and all associated QC requirements specified in the selected CAM protocol(s) followed?	[X] Yes [ ] No
C	Were all required corrective actions and analytical response actions specified in the selected CAM protocol(s) implemented for all identified performance standard non-conformances?	[X] Yes [ ] No
D	Does the laboratory report comply with all the reporting requirements specified in CAM VII A, "Quality Assurance and Quality Control Guidelines for the Acquisition and Reporting of Analytical Data"?	[X] Yes [ ] No
E	a. VPH, EPH and APH Methods only: Was each method conducted without significant modification(s)? (Refer to the individual method(s) for a list of significant modifications). b. APH and TO-15 Methods only: Was the complete analyte list reported for each method?	[ ] Yes [ ] No [ ] Yes [ ] No
F	Were all applicable CAM protocol QC and performance standard non-conformances identified and evaluated in a laboratory narrative (including all "No" responses to Questions A through E)?	[X] Yes [ ] No

Responses to Questions G, H and I below are required for "Presumptive Certainty" status

G	Were the reporting limits at or below all CAM reporting limits specified in the selected CAM protocol(s)?	[ ] Yes [X] No[1]

***Data User Note:* Data that achieve "Presumptive Certainty" status may not necessarily meet the data usability and representativeness requirements described in 310 CMR 40. 1056 (2)(k) and WCS-07-350**

H	Were **all** QC performance standards specified in the CAM protocol(s) achieved?	[ ] Yes [X] No[1]
I	Were results reported for the complete analyte list specified in the selected CAM protocol(s) ?	[X] Yes [ ] No[1]

[1] All negative responses must be addressed in an attached laboratory narrative.

I, the undersigned, attest under the pains and penalties of perjury that, based upon my personal inquiry of those responsible for obtaining the information, the material contained in this analytical report is, to the best of my knowledge and belief, is accurate and complete.

Signature: Position: Laboratory Director-TestAmerica Westfield

Printed Name: Steven C. Hartmann Date: 12/14/12 15:57

This form has been electronically signed and approved

Detection Summary

Client: Innovative Engineering Solutions, Inc
Project/Site: IDS Wayland

TestAmerica Job ID: 480-29929-1

Client Sample ID: REW-6-20121209-01 — Lab Sample ID: 480-29929-1

Analyte	Result	Qualifier	RL	MDL	Unit	Dil Fac	D	Method	Prep Type
1,4-Dioxane	10		1.6		ug/L	1		8260B SIM	Total/NA
cis-1,2-Dichloroethene	420		10		ug/L	10		8260C	Total/NA
Tetrachloroethene	19		10		ug/L	10		8260C	Total/NA
Trichloroethene	510		10		ug/L	10		8260C	Total/NA
Vinyl chloride	16		5.0		ug/L	10		8260C	Total/NA

Client Sample ID: REW-7-20121209-01 — Lab Sample ID: 480-29929-2

Analyte	Result	Qualifier	RL	MDL	Unit	Dil Fac	D	Method	Prep Type
1,4-Dioxane	9.9		1.6		ug/L	1		8260B SIM	Total/NA
cis-1,2-Dichloroethene	930		10		ug/L	10		8260C	Total/NA
Trichloroethene	300		10		ug/L	10		8260C	Total/NA
Vinyl chloride	140		5.0		ug/L	10		8260C	Total/NA

Client Sample ID: REW-8-20121209-01 — Lab Sample ID: 480-29929-3

Analyte	Result	Qualifier	RL	MDL	Unit	Dil Fac	D	Method	Prep Type
1,4-Dioxane	7.9		1.6		ug/L	1		8260B SIM	Total/NA
cis-1,2-Dichloroethene	290		5.0		ug/L	5		8260C	Total/NA
trans-1,2-Dichloroethene	10		5.0		ug/L	5		8260C	Total/NA
Trichloroethene	220		5.0		ug/L	5		8260C	Total/NA
Vinyl chloride	26		2.5		ug/L	5		8260C	Total/NA

Client Sample ID: REW-9-20121209-01 — Lab Sample ID: 480-29929-4

Analyte	Result	Qualifier	RL	MDL	Unit	Dil Fac	D	Method	Prep Type
1,4-Dioxane	1.9		1.6		ug/L	1		8260B SIM	Total/NA
cis-1,2-Dichloroethene	5.5		1.0		ug/L	1		8260C	Total/NA
Trichloroethene	14		1.0		ug/L	1		8260C	Total/NA
Vinyl chloride	2.5		0.50		ug/L	1		8260C	Total/NA

Client Sample ID: REW-10-20121209-01 — Lab Sample ID: 480-29929-5

Analyte	Result	Qualifier	RL	MDL	Unit	Dil Fac	D	Method	Prep Type
cis-1,2-Dichloroethene	15		1.0		ug/L	1		8260C	Total/NA
Trichloroethene	5.6		1.0		ug/L	1		8260C	Total/NA

Client Sample ID: REW-11-20121209-01 — Lab Sample ID: 480-29929-6

Analyte	Result	Qualifier	RL	MDL	Unit	Dil Fac	D	Method	Prep Type
1,4-Dioxane	20		1.6		ug/L	1		8260B SIM	Total/NA
Tetrachloroethene	22		10		ug/L	10		8260C	Total/NA
Trichloroethene	740		10		ug/L	10		8260C	Total/NA
Vinyl chloride	33		5.0		ug/L	10		8260C	Total/NA
cis-1,2-Dichloroethene - DL	930		20		ug/L	20		8260C	Total/NA

Client Sample ID: REW-12-20121209-01 — Lab Sample ID: 480-29929-7

Analyte	Result	Qualifier	RL	MDL	Unit	Dil Fac	D	Method	Prep Type
1,4-Dioxane	4.3		1.6		ug/L	1		8260B SIM	Total/NA
cis-1,2-Dichloroethene	220		4.0		ug/L	4		8260C	Total/NA
Tetrachloroethene	8.0		4.0		ug/L	4		8260C	Total/NA

Detection Summary

Client: Innovative Engineering Solutions, Inc
Project/Site: IDS Wayland

TestAmerica Job ID: 480-29929-1

Client Sample ID: REW-12-20121209-01 (Continued) — Lab Sample ID: 480-29929-7

Analyte	Result	Qualifier	RL	MDL	Unit	Dil Fac	D	Method	Prep Type
Trichloroethene	150		4.0		ug/L	4		8260C	Total/NA
Vinyl chloride	10		2.0		ug/L	4		8260C	Total/NA

Client Sample ID: MW-563-20121209-01 — Lab Sample ID: 480-29929-8

Analyte	Result	Qualifier	RL	MDL	Unit	Dil Fac	D	Method	Prep Type
1,4-Dioxane	3.4		1.6		ug/L	1		8260B SIM	Total/NA
cis-1,2-Dichloroethene	250		5.0		ug/L	5		8260C	Total/NA
Trichloroethene	260		5.0		ug/L	5		8260C	Total/NA
Vinyl chloride	35		2.5		ug/L	5		8260C	Total/NA

Client Sample ID: DUPX-20121209-01 — Lab Sample ID: 480-29929-9

Analyte	Result	Qualifier	RL	MDL	Unit	Dil Fac	D	Method	Prep Type
1,4-Dioxane	2.5		1.6		ug/L	1		8260B SIM	Total/NA
cis-1,2-Dichloroethene	330		5.0		ug/L	5		8260C	Total/NA
Tetrachloroethene	6.8		5.0		ug/L	5		8260C	Total/NA
Trichloroethene	350		5.0		ug/L	5		8260C	Total/NA
Vinyl chloride	50		2.5		ug/L	5		8260C	Total/NA

Client Sample ID: TRIP BLANK — Lab Sample ID: 480-29929-10

No Detections

Client Sample Results

Client: Innovative Engineering Solutions, Inc
Project/Site: IDS Wayland

TestAmerica Job ID: 480-29929-1

Client Sample ID: REW-6-20121209-01

Lab Sample ID: 480-29929-1

Date Collected: 12/09/12 12:00

Matrix: Water

Date Received: 12/11/12 09:00

Method: 8260B SIM - Volatile Organic Compounds (GC/MS)

Analyte	Result	Qualifier	RL	MDL	Unit	D	Prepared	Analyzed	Dil Fac
1,4-Dioxane	**10**		1.6		ug/L			12/13/12 14:05	1

Method: 8260C - Volatile Organic Compounds (GC/MS)

Analyte	Result	Qualifier	RL	MDL	Unit	D	Prepared	Analyzed	Dil Fac
1,1,1,2-Tetrachloroethane	ND		10		ug/L			12/12/12 05:37	10
1,1,1-Trichloroethane	ND		10		ug/L			12/12/12 05:37	10
1,1,2,2-Tetrachloroethane	ND		5.0		ug/L			12/12/12 05:37	10
1,1,2-Trichloroethane	ND		10		ug/L			12/12/12 05:37	10
1,1-Dichloroethane	ND		10		ug/L			12/12/12 05:37	10
1,1-Dichloroethene	ND		10		ug/L			12/12/12 05:37	10
1,1-Dichloropropene	ND		10		ug/L			12/12/12 05:37	10
1,2,3-Trichlorobenzene	ND		10		ug/L			12/12/12 05:37	10
1,2,3-Trichloropropane	ND		10		ug/L			12/12/12 05:37	10
1,2,4-Trichlorobenzene	ND		10		ug/L			12/12/12 05:37	10
1,2,4-Trimethylbenzene	ND		10		ug/L			12/12/12 05:37	10
1,2-Dibromo-3-Chloropropane	ND		50		ug/L			12/12/12 05:37	10
1,2-Dichlorobenzene	ND		10		ug/L			12/12/12 05:37	10
1,2-Dichloroethane	ND		10		ug/L			12/12/12 05:37	10
1,2-Dichloropropane	ND		10		ug/L			12/12/12 05:37	10
1,3,5-Trimethylbenzene	ND		10		ug/L			12/12/12 05:37	10
1,3-Dichlorobenzene	ND		10		ug/L			12/12/12 05:37	10
1,3-Dichloropropane	ND		10		ug/L			12/12/12 05:37	10
1,4-Dichlorobenzene	ND		10		ug/L			12/12/12 05:37	10
1,4-Dioxane	ND		500		ug/L			12/12/12 05:37	10
2,2-Dichloropropane	ND		10		ug/L			12/12/12 05:37	10
2-Butanone (MEK)	ND		100		ug/L			12/12/12 05:37	10
2-Chlorotoluene	ND		10		ug/L			12/12/12 05:37	10
2-Hexanone	ND		100		ug/L			12/12/12 05:37	10
4-Chlorotoluene	ND		10		ug/L			12/12/12 05:37	10
4-Isopropyltoluene	ND		10		ug/L			12/12/12 05:37	10
4-Methyl-2-pentanone (MIBK)	ND		100		ug/L			12/12/12 05:37	10
Acetone	ND		500		ug/L			12/12/12 05:37	10
Benzene	ND		10		ug/L			12/12/12 05:37	10
Bromobenzene	ND		10		ug/L			12/12/12 05:37	10
Bromoform	ND		10		ug/L			12/12/12 05:37	10
Bromomethane	ND		20		ug/L			12/12/12 05:37	10
Carbon disulfide	ND		100		ug/L			12/12/12 05:37	10
Carbon tetrachloride	ND		10		ug/L			12/12/12 05:37	10
Chlorobenzene	ND		10		ug/L			12/12/12 05:37	10
Chlorobromomethane	ND		10		ug/L			12/12/12 05:37	10
Chlorodibromomethane	ND		5.0		ug/L			12/12/12 05:37	10
Chloroethane	ND		20		ug/L			12/12/12 05:37	10
Chloroform	ND		10		ug/L			12/12/12 05:37	10
Chloromethane	ND		20		ug/L			12/12/12 05:37	10
cis-1,2-Dichloroethene	**420**		10		ug/L			12/12/12 05:37	10
cis-1,3-Dichloropropene	ND		4.0		ug/L			12/12/12 05:37	10
Dichlorobromomethane	ND		5.0		ug/L			12/12/12 05:37	10
Dichlorodifluoromethane	ND		10		ug/L			12/12/12 05:37	10
Ethyl ether	ND		10		ug/L			12/12/12 05:37	10

Client Sample ID: REW-6-20121209-01

Lab Sample ID: 480-29929-1

Date Collected: 12/09/12 12:00

Matrix: Water

Date Received: 12/11/12 09:00

Method: 8260C - Volatile Organic Compounds (GC/MS) (Continued)

Analyte	Result	Qualifier	RL	MDL	Unit	D	Prepared	Analyzed	Dil Fac
Ethylbenzene	ND		10		ug/L			12/12/12 05:37	10
Ethylene Dibromide	ND		10		ug/L			12/12/12 05:37	10
Hexachlorobutadiene	ND		4.0		ug/L			12/12/12 05:37	10
Isopropyl ether	ND		100		ug/L			12/12/12 05:37	10
Isopropylbenzene	ND		10		ug/L			12/12/12 05:37	10
Methyl tert-butyl ether	ND		10		ug/L			12/12/12 05:37	10
Methylene Chloride	ND		10		ug/L			12/12/12 05:37	10
m-Xylene & p-Xylene	ND		20		ug/L			12/12/12 05:37	10
Naphthalene	ND		50		ug/L			12/12/12 05:37	10
n-Butylbenzene	ND		10		ug/L			12/12/12 05:37	10
N-Propylbenzene	ND		10		ug/L			12/12/12 05:37	10
o-Xylene	ND		10		ug/L			12/12/12 05:37	10
sec-Butylbenzene	ND		10		ug/L			12/12/12 05:37	10
Styrene	ND		10		ug/L			12/12/12 05:37	10
Tert-amyl methyl ether	ND		50		ug/L			12/12/12 05:37	10
Tert-butyl ethyl ether	ND		50		ug/L			12/12/12 05:37	10
tert-Butylbenzene	ND		10		ug/L			12/12/12 05:37	10
Tetrachloroethene	**19**		10		ug/L			12/12/12 05:37	10
Tetrahydrofuran	ND		100		ug/L			12/12/12 05:37	10
Toluene	ND		10		ug/L			12/12/12 05:37	10
trans-1,2-Dichloroethene	ND		10		ug/L			12/12/12 05:37	10
trans-1,3-Dichloropropene	ND		4.0		ug/L			12/12/12 05:37	10
Trichloroethene	**510**		10		ug/L			12/12/12 05:37	10
Trichlorofluoromethane	ND		10		ug/L			12/12/12 05:37	10
Vinyl chloride	**16**		5.0		ug/L			12/12/12 05:37	10
Dibromomethane	ND		10		ug/L			12/12/12 05:37	10

Surrogate	*%Recovery*	*Qualifier*	*Limits*	*Prepared*	*Analyzed*	*Dil Fac*
Toluene-d8 (Surr)	*114*		*70 - 130*		*12/12/12 05:37*	*10*
1,2-Dichloroethane-d4 (Surr)	*105*		*70 - 130*		*12/12/12 05:37*	*10*
4-Bromofluorobenzene (Surr)	*111*		*70 - 130*		*12/12/12 05:37*	*10*

Client Sample ID: REW-7-20121209-01

Lab Sample ID: 480-29929-2

Date Collected: 12/09/12 13:15

Matrix: Water

Date Received: 12/11/12 09:00

Method: 8260B SIM - Volatile Organic Compounds (GC/MS)

Analyte	Result	Qualifier	RL	MDL	Unit	D	Prepared	Analyzed	Dil Fac
1,4-Dioxane	**9.9**		1.6		ug/L			12/13/12 14:29	1

Method: 8260C - Volatile Organic Compounds (GC/MS)

Analyte	Result	Qualifier	RL	MDL	Unit	D	Prepared	Analyzed	Dil Fac
1,1,1,2-Tetrachloroethane	ND		10		ug/L			12/12/12 06:01	10
1,1,1-Trichloroethane	ND		10		ug/L			12/12/12 06:01	10
1,1,2,2-Tetrachloroethane	ND		5.0		ug/L			12/12/12 06:01	10
1,1,2-Trichloroethane	ND		10		ug/L			12/12/12 06:01	10
1,1-Dichloroethane	ND		10		ug/L			12/12/12 06:01	10
1,1-Dichloroethene	ND		10		ug/L			12/12/12 06:01	10
1,1-Dichloropropene	ND		10		ug/L			12/12/12 06:01	10
1,2,3-Trichlorobenzene	ND		10		ug/L			12/12/12 06:01	10

Client Sample ID: REW-7-20121209-01
Date Collected: 12/09/12 13:15
Date Received: 12/11/12 09:00

Lab Sample ID: 480-29929-2
Matrix: Water

Method: 8260C - Volatile Organic Compounds (GC/MS) (Continued)

Analyte	Result	Qualifier	RL	MDL	Unit	D	Prepared	Analyzed	Dil Fac
1,2,3-Trichloropropane	ND		10		ug/L			12/12/12 06:01	10
1,2,4-Trichlorobenzene	ND		10		ug/L			12/12/12 06:01	10
1,2,4-Trimethylbenzene	ND		10		ug/L			12/12/12 06:01	10
1,2-Dibromo-3-Chloropropane	ND		50		ug/L			12/12/12 06:01	10
1,2-Dichlorobenzene	ND		10		ug/L			12/12/12 06:01	10
1,2-Dichloroethane	ND		10		ug/L			12/12/12 06:01	10
1,2-Dichloropropane	ND		10		ug/L			12/12/12 06:01	10
1,3,5-Trimethylbenzene	ND		10		ug/L			12/12/12 06:01	10
1,3-Dichlorobenzene	ND		10		ug/L			12/12/12 06:01	10
1,3-Dichloropropane	ND		10		ug/L			12/12/12 06:01	10
1,4-Dichlorobenzene	ND		10		ug/L			12/12/12 06:01	10
1,4-Dioxane	ND		500		ug/L			12/12/12 06:01	10
2,2-Dichloropropane	ND		10		ug/L			12/12/12 06:01	10
2-Butanone (MEK)	ND		100		ug/L			12/12/12 06:01	10
2-Chlorotoluene	ND		10		ug/L			12/12/12 06:01	10
2-Hexanone	ND		100		ug/L			12/12/12 06:01	10
4-Chlorotoluene	ND		10		ug/L			12/12/12 06:01	10
4-Isopropyltoluene	ND		10		ug/L			12/12/12 06:01	10
4-Methyl-2-pentanone (MIBK)	ND		100		ug/L			12/12/12 06:01	10
Acetone	ND		500		ug/L			12/12/12 06:01	10
Benzene	ND		10		ug/L			12/12/12 06:01	10
Bromobenzene	ND		10		ug/L			12/12/12 06:01	10
Bromoform	ND		10		ug/L			12/12/12 06:01	10
Bromomethane	ND		20		ug/L			12/12/12 06:01	10
Carbon disulfide	ND		100		ug/L			12/12/12 06:01	10
Carbon tetrachloride	ND		10		ug/L			12/12/12 06:01	10
Chlorobenzene	ND		10		ug/L			12/12/12 06:01	10
Chlorobromomethane	ND		10		ug/L			12/12/12 06:01	10
Chlorodibromomethane	ND		5.0		ug/L			12/12/12 06:01	10
Chloroethane	ND		20		ug/L			12/12/12 06:01	10
Chloroform	ND		10		ug/L			12/12/12 06:01	10
Chloromethane	ND		20		ug/L			12/12/12 06:01	10
cis-1,2-Dichloroethene	**930**		10		ug/L			12/12/12 06:01	10
cis-1,3-Dichloropropene	ND		4.0		ug/L			12/12/12 06:01	10
Dichlorobromomethane	ND		5.0		ug/L			12/12/12 06:01	10
Dichlorodifluoromethane	ND		10		ug/L			12/12/12 06:01	10
Ethyl ether	ND		10		ug/L			12/12/12 06:01	10
Ethylbenzene	ND		10		ug/L			12/12/12 06:01	10
Ethylene Dibromide	ND		10		ug/L			12/12/12 06:01	10
Hexachlorobutadiene	ND		4.0		ug/L			12/12/12 06:01	10
Isopropyl ether	ND		100		ug/L			12/12/12 06:01	10
Isopropylbenzene	ND		10		ug/L			12/12/12 06:01	10
Methyl tert-butyl ether	ND		10		ug/L			12/12/12 06:01	10
Methylene Chloride	ND		10		ug/L			12/12/12 06:01	10
m-Xylene & p-Xylene	ND		20		ug/L			12/12/12 06:01	10
Naphthalene	ND		50		ug/L			12/12/12 06:01	10
n-Butylbenzene	ND		10		ug/L			12/12/12 06:01	10
N-Propylbenzene	ND		10		ug/L			12/12/12 06:01	10
o-Xylene	ND		10		ug/L			12/12/12 06:01	10

Client Sample ID: REW-7-20121209-01

Lab Sample ID: 480-29929-2

Date Collected: 12/09/12 13:15

Matrix: Water

Date Received: 12/11/12 09:00

Method: 8260C - Volatile Organic Compounds (GC/MS) (Continued)

Analyte	Result	Qualifier	RL	MDL	Unit	D	Prepared	Analyzed	Dil Fac
sec-Butylbenzene	ND		10		ug/L			12/12/12 06:01	10
Styrene	ND		10		ug/L			12/12/12 06:01	10
Tert-amyl methyl ether	ND		50		ug/L			12/12/12 06:01	10
Tert-butyl ethyl ether	ND		50		ug/L			12/12/12 06:01	10
tert-Butylbenzene	ND		10		ug/L			12/12/12 06:01	10
Tetrachloroethene	ND		10		ug/L			12/12/12 06:01	10
Tetrahydrofuran	ND		100		ug/L			12/12/12 06:01	10
Toluene	ND		10		ug/L			12/12/12 06:01	10
trans-1,2-Dichloroethene	ND		10		ug/L			12/12/12 06:01	10
trans-1,3-Dichloropropene	ND		4.0		ug/L			12/12/12 06:01	10
Trichloroethene	**300**		10		ug/L			12/12/12 06:01	10
Trichlorofluoromethane	ND		10		ug/L			12/12/12 06:01	10
Vinyl chloride	**140**		5.0		ug/L			12/12/12 06:01	10
Dibromomethane	ND		10		ug/L			12/12/12 06:01	10

Surrogate	*%Recovery*	*Qualifier*	*Limits*	*Prepared*	*Analyzed*	*Dil Fac*
Toluene-d8 (Surr)	*117*		*70 - 130*		*12/12/12 06:01*	*10*
1,2-Dichloroethane-d4 (Surr)	*111*		*70 - 130*		*12/12/12 06:01*	*10*
4-Bromofluorobenzene (Surr)	*107*		*70 - 130*		*12/12/12 06:01*	*10*

Client Sample ID: REW-8-20121209-01

Lab Sample ID: 480-29929-3

Date Collected: 12/09/12 12:45

Matrix: Water

Date Received: 12/11/12 09:00

Method: 8260B SIM - Volatile Organic Compounds (GC/MS)

Analyte	Result	Qualifier	RL	MDL	Unit	D	Prepared	Analyzed	Dil Fac
1,4-Dioxane	**7.9**		1.6		ug/L			12/13/12 14:53	1

Method: 8260C - Volatile Organic Compounds (GC/MS)

Analyte	Result	Qualifier	RL	MDL	Unit	D	Prepared	Analyzed	Dil Fac
1,1,1,2-Tetrachloroethane	ND		5.0		ug/L			12/12/12 18:52	5
1,1,1-Trichloroethane	ND		5.0		ug/L			12/12/12 18:52	5
1,1,2,2-Tetrachloroethane	ND		2.5		ug/L			12/12/12 18:52	5
1,1,2-Trichloroethane	ND		5.0		ug/L			12/12/12 18:52	5
1,1-Dichloroethane	ND		5.0		ug/L			12/12/12 18:52	5
1,1-Dichloroethene	ND		5.0		ug/L			12/12/12 18:52	5
1,1-Dichloropropene	ND		5.0		ug/L			12/12/12 18:52	5
1,2,3-Trichlorobenzene	ND		5.0		ug/L			12/12/12 18:52	5
1,2,3-Trichloropropane	ND		5.0		ug/L			12/12/12 18:52	5
1,2,4-Trichlorobenzene	ND		5.0		ug/L			12/12/12 18:52	5
1,2,4-Trimethylbenzene	ND		5.0		ug/L			12/12/12 18:52	5
1,2-Dibromo-3-Chloropropane	ND		25		ug/L			12/12/12 18:52	5
1,2-Dichlorobenzene	ND		5.0		ug/L			12/12/12 18:52	5
1,2-Dichloroethane	ND		5.0		ug/L			12/12/12 18:52	5
1,2-Dichloropropane	ND		5.0		ug/L			12/12/12 18:52	5
1,3,5-Trimethylbenzene	ND		5.0		ug/L			12/12/12 18:52	5
1,3-Dichlorobenzene	ND		5.0		ug/L			12/12/12 18:52	5
1,3-Dichloropropane	ND		5.0		ug/L			12/12/12 18:52	5
1,4-Dichlorobenzene	ND		5.0		ug/L			12/12/12 18:52	5
1,4-Dioxane	ND		250		ug/L			12/12/12 18:52	5

Client: Innovative Engineering Solutions, Inc
Project/Site: IDS Wayland

TestAmerica Job ID: 480-29929-1

Client Sample ID: REW-8-20121209-01
Date Collected: 12/09/12 12:45
Date Received: 12/11/12 09:00

Lab Sample ID: 480-29929-3
Matrix: Water

Method: 8260C - Volatile Organic Compounds (GC/MS) (Continued)

Analyte	Result	Qualifier	RL	MDL	Unit	D	Prepared	Analyzed	Dil Fac
2,2-Dichloropropane	ND		5.0		ug/L			12/12/12 18:52	5
2-Butanone (MEK)	ND	*	50		ug/L			12/12/12 18:52	5
2-Chlorotoluene	ND		5.0		ug/L			12/12/12 18:52	5
2-Hexanone	ND		50		ug/L			12/12/12 18:52	5
4-Chlorotoluene	ND		5.0		ug/L			12/12/12 18:52	5
4-Isopropyltoluene	ND		5.0		ug/L			12/12/12 18:52	5
4-Methyl-2-pentanone (MIBK)	ND		50		ug/L			12/12/12 18:52	5
Acetone	ND	*	250		ug/L			12/12/12 18:52	5
Benzene	ND		5.0		ug/L			12/12/12 18:52	5
Bromobenzene	ND		5.0		ug/L			12/12/12 18:52	5
Bromoform	ND		5.0		ug/L			12/12/12 18:52	5
Bromomethane	ND		10		ug/L			12/12/12 18:52	5
Carbon disulfide	ND		50		ug/L			12/12/12 18:52	5
Carbon tetrachloride	ND		5.0		ug/L			12/12/12 18:52	5
Chlorobenzene	ND		5.0		ug/L			12/12/12 18:52	5
Chlorobromomethane	ND		5.0		ug/L			12/12/12 18:52	5
Chlorodibromomethane	ND		2.5		ug/L			12/12/12 18:52	5
Chloroethane	ND		10		ug/L			12/12/12 18:52	5
Chloroform	ND		5.0		ug/L			12/12/12 18:52	5
Chloromethane	ND		10		ug/L			12/12/12 18:52	5
cis-1,2-Dichloroethene	**290**		5.0		ug/L			12/12/12 18:52	5
cis-1,3-Dichloropropene	ND		2.0		ug/L			12/12/12 18:52	5
Dichlorobromomethane	ND		2.5		ug/L			12/12/12 18:52	5
Dichlorodifluoromethane	ND		5.0		ug/L			12/12/12 18:52	5
Ethyl ether	ND		5.0		ug/L			12/12/12 18:52	5
Ethylbenzene	ND		5.0		ug/L			12/12/12 18:52	5
Ethylene Dibromide	ND		5.0		ug/L			12/12/12 18:52	5
Hexachlorobutadiene	ND		2.0		ug/L			12/12/12 18:52	5
Isopropyl ether	ND		50		ug/L			12/12/12 18:52	5
Isopropylbenzene	ND		5.0		ug/L			12/12/12 18:52	5
Methyl tert-butyl ether	ND		5.0		ug/L			12/12/12 18:52	5
Methylene Chloride	ND		5.0		ug/L			12/12/12 18:52	5
m-Xylene & p-Xylene	ND		10		ug/L			12/12/12 18:52	5
Naphthalene	ND		25		ug/L			12/12/12 18:52	5
n-Butylbenzene	ND		5.0		ug/L			12/12/12 18:52	5
N-Propylbenzene	ND		5.0		ug/L			12/12/12 18:52	5
o-Xylene	ND		5.0		ug/L			12/12/12 18:52	5
sec-Butylbenzene	ND		5.0		ug/L			12/12/12 18:52	5
Styrene	ND		5.0		ug/L			12/12/12 18:52	5
Tert-amyl methyl ether	ND		25		ug/L			12/12/12 18:52	5
Tert-butyl ethyl ether	ND		25		ug/L			12/12/12 18:52	5
tert-Butylbenzene	ND		5.0		ug/L			12/12/12 18:52	5
Tetrachloroethene	ND		5.0		ug/L			12/12/12 18:52	5
Tetrahydrofuran	ND		50		ug/L			12/12/12 18:52	5
Toluene	ND		5.0		ug/L			12/12/12 18:52	5
trans-1,2-Dichloroethene	**10**		5.0		ug/L			12/12/12 18:52	5
trans-1,3-Dichloropropene	ND		2.0		ug/L			12/12/12 18:52	5
Trichloroethene	**220**		5.0		ug/L			12/12/12 18:52	5
Trichlorofluoromethane	ND		5.0		ug/L			12/12/12 18:52	5

Client Sample ID: REW-8-20121209-01

Lab Sample ID: 480-29929-3

Date Collected: 12/09/12 12:45

Matrix: Water

Date Received: 12/11/12 09:00

Method: 8260C - Volatile Organic Compounds (GC/MS) (Continued)

Analyte	Result	Qualifier	RL	MDL	Unit	D	Prepared	Analyzed	Dil Fac
Vinyl chloride	26		2.5		ug/L			12/12/12 18:52	5
Dibromomethane	ND		5.0		ug/L			12/12/12 18:52	5

Surrogate	*%Recovery*	*Qualifier*	*Limits*	*Prepared*	*Analyzed*	*Dil Fac*
Toluene-d8 (Surr)	*113*		*70 - 130*		*12/12/12 18:52*	*5*
1,2-Dichloroethane-d4 (Surr)	*101*		*70 - 130*		*12/12/12 18:52*	*5*
4-Bromofluorobenzene (Surr)	*102*		*70 - 130*		*12/12/12 18:52*	*5*

Client Sample ID: REW-9-20121209-01

Lab Sample ID: 480-29929-4

Date Collected: 12/09/12 13:45

Matrix: Water

Date Received: 12/11/12 09:00

Method: 8260B SIM - Volatile Organic Compounds (GC/MS)

Analyte	Result	Qualifier	RL	MDL	Unit	D	Prepared	Analyzed	Dil Fac
1,4-Dioxane	1.9		1.6		ug/L			12/13/12 15:17	1

Method: 8260C - Volatile Organic Compounds (GC/MS)

Analyte	Result	Qualifier	RL	MDL	Unit	D	Prepared	Analyzed	Dil Fac
1,1,1,2-Tetrachloroethane	ND		1.0		ug/L			12/12/12 19:16	1
1,1,1-Trichloroethane	ND		1.0		ug/L			12/12/12 19:16	1
1,1,2,2-Tetrachloroethane	ND		0.50		ug/L			12/12/12 19:16	1
1,1,2-Trichloroethane	ND		1.0		ug/L			12/12/12 19:16	1
1,1-Dichloroethane	ND		1.0		ug/L			12/12/12 19:16	1
1,1-Dichloroethene	ND		1.0		ug/L			12/12/12 19:16	1
1,1-Dichloropropene	ND		1.0		ug/L			12/12/12 19:16	1
1,2,3-Trichlorobenzene	ND		1.0		ug/L			12/12/12 19:16	1
1,2,3-Trichloropropane	ND		1.0		ug/L			12/12/12 19:16	1
1,2,4-Trichlorobenzene	ND		1.0		ug/L			12/12/12 19:16	1
1,2,4-Trimethylbenzene	ND		1.0		ug/L			12/12/12 19:16	1
1,2-Dibromo-3-Chloropropane	ND		5.0		ug/L			12/12/12 19:16	1
1,2-Dichlorobenzene	ND		1.0		ug/L			12/12/12 19:16	1
1,2-Dichloroethane	ND		1.0		ug/L			12/12/12 19:16	1
1,2-Dichloropropane	ND		1.0		ug/L			12/12/12 19:16	1
1,3,5-Trimethylbenzene	ND		1.0		ug/L			12/12/12 19:16	1
1,3-Dichlorobenzene	ND		1.0		ug/L			12/12/12 19:16	1
1,3-Dichloropropane	ND		1.0		ug/L			12/12/12 19:16	1
1,4-Dichlorobenzene	ND		1.0		ug/L			12/12/12 19:16	1
1,4-Dioxane	ND		50		ug/L			12/12/12 19:16	1
2,2-Dichloropropane	ND		1.0		ug/L			12/12/12 19:16	1
2-Butanone (MEK)	ND	*	10		ug/L			12/12/12 19:16	1
2-Chlorotoluene	ND		1.0		ug/L			12/12/12 19:16	1
2-Hexanone	ND		10		ug/L			12/12/12 19:16	1
4-Chlorotoluene	ND		1.0		ug/L			12/12/12 19:16	1
4-Isopropyltoluene	ND		1.0		ug/L			12/12/12 19:16	1
4-Methyl-2-pentanone (MIBK)	ND		10		ug/L			12/12/12 19:16	1
Acetone	ND	*	50		ug/L			12/12/12 19:16	1
Benzene	ND		1.0		ug/L			12/12/12 19:16	1
Bromobenzene	ND		1.0		ug/L			12/12/12 19:16	1
Bromoform	ND		1.0		ug/L			12/12/12 19:16	1
Bromomethane	ND		2.0		ug/L			12/12/12 19:16	1

Client Sample ID: REW-9-20121209-01

Lab Sample ID: 480-29929-4

Date Collected: 12/09/12 13:45

Matrix: Water

Date Received: 12/11/12 09:00

Method: 8260C - Volatile Organic Compounds (GC/MS) (Continued)

Analyte	Result	Qualifier	RL	MDL	Unit	D	Prepared	Analyzed	Dil Fac
Carbon disulfide	ND		10		ug/L			12/12/12 19:16	1
Carbon tetrachloride	ND		1.0		ug/L			12/12/12 19:16	1
Chlorobenzene	ND		1.0		ug/L			12/12/12 19:16	1
Chlorobromomethane	ND		1.0		ug/L			12/12/12 19:16	1
Chlorodibromomethane	ND		0.50		ug/L			12/12/12 19:16	1
Chloroethane	ND		2.0		ug/L			12/12/12 19:16	1
Chloroform	ND		1.0		ug/L			12/12/12 19:16	1
Chloromethane	ND		2.0		ug/L			12/12/12 19:16	1
cis-1,2-Dichloroethene	**5.5**		1.0		ug/L			12/12/12 19:16	1
cis-1,3-Dichloropropene	ND		0.40		ug/L			12/12/12 19:16	1
Dichlorobromomethane	ND		0.50		ug/L			12/12/12 19:16	1
Dichlorodifluoromethane	ND		1.0		ug/L			12/12/12 19:16	1
Ethyl ether	ND		1.0		ug/L			12/12/12 19:16	1
Ethylbenzene	ND		1.0		ug/L			12/12/12 19:16	1
Ethylene Dibromide	ND		1.0		ug/L			12/12/12 19:16	1
Hexachlorobutadiene	ND		0.40		ug/L			12/12/12 19:16	1
Isopropyl ether	ND		10		ug/L			12/12/12 19:16	1
Isopropylbenzene	ND		1.0		ug/L			12/12/12 19:16	1
Methyl tert-butyl ether	ND		1.0		ug/L			12/12/12 19:16	1
Methylene Chloride	ND		1.0		ug/L			12/12/12 19:16	1
m-Xylene & p-Xylene	ND		2.0		ug/L			12/12/12 19:16	1
Naphthalene	ND		5.0		ug/L			12/12/12 19:16	1
n-Butylbenzene	ND		1.0		ug/L			12/12/12 19:16	1
N-Propylbenzene	ND		1.0		ug/L			12/12/12 19:16	1
o-Xylene	ND		1.0		ug/L			12/12/12 19:16	1
sec-Butylbenzene	ND		1.0		ug/L			12/12/12 19:16	1
Styrene	ND		1.0		ug/L			12/12/12 19:16	1
Tert-amyl methyl ether	ND		5.0		ug/L			12/12/12 19:16	1
Tert-butyl ethyl ether	ND		5.0		ug/L			12/12/12 19:16	1
tert-Butylbenzene	ND		1.0		ug/L			12/12/12 19:16	1
Tetrachloroethene	ND		1.0		ug/L			12/12/12 19:16	1
Tetrahydrofuran	ND		10		ug/L			12/12/12 19:16	1
Toluene	ND		1.0		ug/L			12/12/12 19:16	1
trans-1,2-Dichloroethene	ND		1.0		ug/L			12/12/12 19:16	1
trans-1,3-Dichloropropene	ND		0.40		ug/L			12/12/12 19:16	1
Trichloroethene	**14**		1.0		ug/L			12/12/12 19:16	1
Trichlorofluoromethane	ND		1.0		ug/L			12/12/12 19:16	1
Vinyl chloride	**2.5**		0.50		ug/L			12/12/12 19:16	1
Dibromomethane	ND		1.0		ug/L			12/12/12 19:16	1

Surrogate	*%Recovery*	*Qualifier*	*Limits*	*Prepared*	*Analyzed*	*Dil Fac*
Toluene-d8 (Surr)	*115*		*70 - 130*		*12/12/12 19:16*	*1*
1,2-Dichloroethane-d4 (Surr)	*101*		*70 - 130*		*12/12/12 19:16*	*1*
4-Bromofluorobenzene (Surr)	*108*		*70 - 130*		*12/12/12 19:16*	*1*

Client: Innovative Engineering Solutions, Inc
Project/Site: IDS Wayland

TestAmerica Job ID: 480-29929-1

Client Sample ID: REW-10-20121209-01
Date Collected: 12/09/12 14:15
Date Received: 12/11/12 09:00

Lab Sample ID: 480-29929-5
Matrix: Water

Method: 8260B SIM - Volatile Organic Compounds (GC/MS)

Analyte	Result	Qualifier	RL	MDL	Unit	D	Prepared	Analyzed	Dil Fac
1,4-Dioxane	ND		1.6		ug/L			12/13/12 16:05	1

Method: 8260C - Volatile Organic Compounds (GC/MS)

Analyte	Result	Qualifier	RL	MDL	Unit	D	Prepared	Analyzed	Dil Fac
1,1,1,2-Tetrachloroethane	ND		1.0		ug/L			12/12/12 19:40	1
1,1,1-Trichloroethane	ND		1.0		ug/L			12/12/12 19:40	1
1,1,2,2-Tetrachloroethane	ND		0.50		ug/L			12/12/12 19:40	1
1,1,2-Trichloroethane	ND		1.0		ug/L			12/12/12 19:40	1
1,1-Dichloroethane	ND		1.0		ug/L			12/12/12 19:40	1
1,1-Dichloroethene	ND		1.0		ug/L			12/12/12 19:40	1
1,1-Dichloropropene	ND		1.0		ug/L			12/12/12 19:40	1
1,2,3-Trichlorobenzene	ND		1.0		ug/L			12/12/12 19:40	1
1,2,3-Trichloropropane	ND		1.0		ug/L			12/12/12 19:40	1
1,2,4-Trichlorobenzene	ND		1.0		ug/L			12/12/12 19:40	1
1,2,4-Trimethylbenzene	ND		1.0		ug/L			12/12/12 19:40	1
1,2-Dibromo-3-Chloropropane	ND		5.0		ug/L			12/12/12 19:40	1
1,2-Dichlorobenzene	ND		1.0		ug/L			12/12/12 19:40	1
1,2-Dichloroethane	ND		1.0		ug/L			12/12/12 19:40	1
1,2-Dichloropropane	ND		1.0		ug/L			12/12/12 19:40	1
1,3,5-Trimethylbenzene	ND		1.0		ug/L			12/12/12 19:40	1
1,3-Dichlorobenzene	ND		1.0		ug/L			12/12/12 19:40	1
1,3-Dichloropropane	ND		1.0		ug/L			12/12/12 19:40	1
1,4-Dichlorobenzene	ND		1.0		ug/L			12/12/12 19:40	1
1,4-Dioxane	ND		50		ug/L			12/12/12 19:40	1
2,2-Dichloropropane	ND		1.0		ug/L			12/12/12 19:40	1
2-Butanone (MEK)	ND	*	10		ug/L			12/12/12 19:40	1
2-Chlorotoluene	ND		1.0		ug/L			12/12/12 19:40	1
2-Hexanone	ND		10		ug/L			12/12/12 19:40	1
4-Chlorotoluene	ND		1.0		ug/L			12/12/12 19:40	1
4-Isopropyltoluene	ND		1.0		ug/L			12/12/12 19:40	1
4-Methyl-2-pentanone (MIBK)	ND		10		ug/L			12/12/12 19:40	1
Acetone	ND	*	50		ug/L			12/12/12 19:40	1
Benzene	ND		1.0		ug/L			12/12/12 19:40	1
Bromobenzene	ND		1.0		ug/L			12/12/12 19:40	1
Bromoform	ND		1.0		ug/L			12/12/12 19:40	1
Bromomethane	ND		2.0		ug/L			12/12/12 19:40	1
Carbon disulfide	ND		10		ug/L			12/12/12 19:40	1
Carbon tetrachloride	ND		1.0		ug/L			12/12/12 19:40	1
Chlorobenzene	ND		1.0		ug/L			12/12/12 19:40	1
Chlorobromomethane	ND		1.0		ug/L			12/12/12 19:40	1
Chlorodibromomethane	ND		0.50		ug/L			12/12/12 19:40	1
Chloroethane	ND		2.0		ug/L			12/12/12 19:40	1
Chloroform	ND		1.0		ug/L			12/12/12 19:40	1
Chloromethane	ND		2.0		ug/L			12/12/12 19:40	1
cis-1,2-Dichloroethene	**15**		1.0		ug/L			12/12/12 19:40	1
cis-1,3-Dichloropropene	ND		0.40		ug/L			12/12/12 19:40	1
Dichlorobromomethane	ND		0.50		ug/L			12/12/12 19:40	1
Dichlorodifluoromethane	ND		1.0		ug/L			12/12/12 19:40	1
Ethyl ether	ND		1.0		ug/L			12/12/12 19:40	1
Ethylbenzene	ND		1.0		ug/L			12/12/12 19:40	1

Client Sample ID: REW-10-20121209-01

Lab Sample ID: 480-29929-5

Date Collected: 12/09/12 14:15

Matrix: Water

Date Received: 12/11/12 09:00

Method: 8260C - Volatile Organic Compounds (GC/MS) (Continued)

Analyte	Result	Qualifier	RL	MDL	Unit	D	Prepared	Analyzed	Dil Fac
Ethylene Dibromide	ND		1.0		ug/L			12/12/12 19:40	1
Hexachlorobutadiene	ND		0.40		ug/L			12/12/12 19:40	1
Isopropyl ether	ND		10		ug/L			12/12/12 19:40	1
Isopropylbenzene	ND		1.0		ug/L			12/12/12 19:40	1
Methyl tert-butyl ether	ND		1.0		ug/L			12/12/12 19:40	1
Methylene Chloride	ND		1.0		ug/L			12/12/12 19:40	1
m-Xylene & p-Xylene	ND		2.0		ug/L			12/12/12 19:40	1
Naphthalene	ND		5.0		ug/L			12/12/12 19:40	1
n-Butylbenzene	ND		1.0		ug/L			12/12/12 19:40	1
N-Propylbenzene	ND		1.0		ug/L			12/12/12 19:40	1
o-Xylene	ND		1.0		ug/L			12/12/12 19:40	1
sec-Butylbenzene	ND		1.0		ug/L			12/12/12 19:40	1
Styrene	ND		1.0		ug/L			12/12/12 19:40	1
Tert-amyl methyl ether	ND		5.0		ug/L			12/12/12 19:40	1
Tert-butyl ethyl ether	ND		5.0		ug/L			12/12/12 19:40	1
tert-Butylbenzene	ND		1.0		ug/L			12/12/12 19:40	1
Tetrachloroethene	ND		1.0		ug/L			12/12/12 19:40	1
Tetrahydrofuran	ND		10		ug/L			12/12/12 19:40	1
Toluene	ND		1.0		ug/L			12/12/12 19:40	1
trans-1,2-Dichloroethene	ND		1.0		ug/L			12/12/12 19:40	1
trans-1,3-Dichloropropene	ND		0.40		ug/L			12/12/12 19:40	1
Trichloroethene	**5.6**		1.0		ug/L			12/12/12 19:40	1
Trichlorofluoromethane	ND		1.0		ug/L			12/12/12 19:40	1
Vinyl chloride	ND		0.50		ug/L			12/12/12 19:40	1
Dibromomethane	ND		1.0		ug/L			12/12/12 19:40	1

Surrogate	*%Recovery*	*Qualifier*	*Limits*	*Prepared*	*Analyzed*	*Dil Fac*
Toluene-d8 (Surr)	*116*		*70 - 130*		*12/12/12 19:40*	*1*
1,2-Dichloroethane-d4 (Surr)	*104*		*70 - 130*		*12/12/12 19:40*	*1*
4-Bromofluorobenzene (Surr)	*106*		*70 - 130*		*12/12/12 19:40*	*1*

Client Sample ID: REW-11-20121209-01

Lab Sample ID: 480-29929-6

Date Collected: 12/09/12 11:25

Matrix: Water

Date Received: 12/11/12 09:00

Method: 8260B SIM - Volatile Organic Compounds (GC/MS)

Analyte	Result	Qualifier	RL	MDL	Unit	D	Prepared	Analyzed	Dil Fac
1,4-Dioxane	**20**		1.6		ug/L			12/13/12 16:29	1

Method: 8260C - Volatile Organic Compounds (GC/MS)

Analyte	Result	Qualifier	RL	MDL	Unit	D	Prepared	Analyzed	Dil Fac
1,1,1,2-Tetrachloroethane	ND		10		ug/L			12/12/12 07:36	10
1,1,1-Trichloroethane	ND		10		ug/L			12/12/12 07:36	10
1,1,2,2-Tetrachloroethane	ND		5.0		ug/L			12/12/12 07:36	10
1,1,2-Trichloroethane	ND		10		ug/L			12/12/12 07:36	10
1,1-Dichloroethane	ND		10		ug/L			12/12/12 07:36	10
1,1-Dichloroethene	ND		10		ug/L			12/12/12 07:36	10
1,1-Dichloropropene	ND		10		ug/L			12/12/12 07:36	10
1,2,3-Trichlorobenzene	ND		10		ug/L			12/12/12 07:36	10
1,2,3-Trichloropropane	ND		10		ug/L			12/12/12 07:36	10

Client Sample ID: REW-11-20121209-01
Date Collected: 12/09/12 11:25
Date Received: 12/11/12 09:00

Lab Sample ID: 480-29929-6
Matrix: Water

Method: 8260C - Volatile Organic Compounds (GC/MS) (Continued)

Analyte	Result	Qualifier	RL	MDL	Unit	D	Prepared	Analyzed	Dil Fac
1,2,4-Trichlorobenzene	ND		10		ug/L			12/12/12 07:36	10
1,2,4-Trimethylbenzene	ND		10		ug/L			12/12/12 07:36	10
1,2-Dibromo-3-Chloropropane	ND		50		ug/L			12/12/12 07:36	10
1,2-Dichlorobenzene	ND		10		ug/L			12/12/12 07:36	10
1,2-Dichloroethane	ND		10		ug/L			12/12/12 07:36	10
1,2-Dichloropropane	ND		10		ug/L			12/12/12 07:36	10
1,3,5-Trimethylbenzene	ND		10		ug/L			12/12/12 07:36	10
1,3-Dichlorobenzene	ND		10		ug/L			12/12/12 07:36	10
1,3-Dichloropropane	ND		10		ug/L			12/12/12 07:36	10
1,4-Dichlorobenzene	ND		10		ug/L			12/12/12 07:36	10
1,4-Dioxane	ND		500		ug/L			12/12/12 07:36	10
2,2-Dichloropropane	ND		10		ug/L			12/12/12 07:36	10
2-Butanone (MEK)	ND		100		ug/L			12/12/12 07:36	10
2-Chlorotoluene	ND		10		ug/L			12/12/12 07:36	10
2-Hexanone	ND		100		ug/L			12/12/12 07:36	10
4-Chlorotoluene	ND		10		ug/L			12/12/12 07:36	10
4-Isopropyltoluene	ND		10		ug/L			12/12/12 07:36	10
4-Methyl-2-pentanone (MIBK)	ND		100		ug/L			12/12/12 07:36	10
Acetone	ND		500		ug/L			12/12/12 07:36	10
Benzene	ND		10		ug/L			12/12/12 07:36	10
Bromobenzene	ND		10		ug/L			12/12/12 07:36	10
Bromoform	ND		10		ug/L			12/12/12 07:36	10
Bromomethane	ND		20		ug/L			12/12/12 07:36	10
Carbon disulfide	ND		100		ug/L			12/12/12 07:36	10
Carbon tetrachloride	ND		10		ug/L			12/12/12 07:36	10
Chlorobenzene	ND		10		ug/L			12/12/12 07:36	10
Chlorobromomethane	ND		10		ug/L			12/12/12 07:36	10
Chlorodibromomethane	ND		5.0		ug/L			12/12/12 07:36	10
Chloroethane	ND		20		ug/L			12/12/12 07:36	10
Chloroform	ND		10		ug/L			12/12/12 07:36	10
Chloromethane	ND		20		ug/L			12/12/12 07:36	10
cis-1,3-Dichloropropene	ND		4.0		ug/L			12/12/12 07:36	10
Dichlorobromomethane	ND		5.0		ug/L			12/12/12 07:36	10
Dichlorodifluoromethane	ND		10		ug/L			12/12/12 07:36	10
Ethyl ether	ND		10		ug/L			12/12/12 07:36	10
Ethylbenzene	ND		10		ug/L			12/12/12 07:36	10
Ethylene Dibromide	ND		10		ug/L			12/12/12 07:36	10
Hexachlorobutadiene	ND		4.0		ug/L			12/12/12 07:36	10
Isopropyl ether	ND		100		ug/L			12/12/12 07:36	10
Isopropylbenzene	ND		10		ug/L			12/12/12 07:36	10
Methyl tert-butyl ether	ND		10		ug/L			12/12/12 07:36	10
Methylene Chloride	ND		10		ug/L			12/12/12 07:36	10
m-Xylene & p-Xylene	ND		20		ug/L			12/12/12 07:36	10
Naphthalene	ND		50		ug/L			12/12/12 07:36	10
n-Butylbenzene	ND		10		ug/L			12/12/12 07:36	10
N-Propylbenzene	ND		10		ug/L			12/12/12 07:36	10
o-Xylene	ND		10		ug/L			12/12/12 07:36	10
sec-Butylbenzene	ND		10		ug/L			12/12/12 07:36	10
Styrene	ND		10		ug/L			12/12/12 07:36	10

Client Sample ID: REW-11-20121209-01

Lab Sample ID: 480-29929-6

Date Collected: 12/09/12 11:25

Matrix: Water

Date Received: 12/11/12 09:00

Method: 8260C - Volatile Organic Compounds (GC/MS) (Continued)

Analyte	Result	Qualifier	RL	MDL	Unit	D	Prepared	Analyzed	Dil Fac
Tert-amyl methyl ether	ND		50		ug/L			12/12/12 07:36	10
Tert-butyl ethyl ether	ND		50		ug/L			12/12/12 07:36	10
tert-Butylbenzene	ND		10		ug/L			12/12/12 07:36	10
Tetrachloroethene	**22**		10		ug/L			12/12/12 07:36	10
Tetrahydrofuran	ND		100		ug/L			12/12/12 07:36	10
Toluene	ND		10		ug/L			12/12/12 07:36	10
trans-1,2-Dichloroethene	ND		10		ug/L			12/12/12 07:36	10
trans-1,3-Dichloropropene	ND		4.0		ug/L			12/12/12 07:36	10
Trichloroethene	**740**		10		ug/L			12/12/12 07:36	10
Trichlorofluoromethane	ND		10		ug/L			12/12/12 07:36	10
Vinyl chloride	**33**		5.0		ug/L			12/12/12 07:36	10
Dibromomethane	ND		10		ug/L			12/12/12 07:36	10

Surrogate	*%Recovery*	*Qualifier*	*Limits*	*Prepared*	*Analyzed*	*Dil Fac*
Toluene-d8 (Surr)	*113*		*70 - 130*		*12/12/12 07:36*	*10*
1,2-Dichloroethane-d4 (Surr)	*109*		*70 - 130*		*12/12/12 07:36*	*10*
4-Bromofluorobenzene (Surr)	*106*		*70 - 130*		*12/12/12 07:36*	*10*

Method: 8260C - Volatile Organic Compounds (GC/MS) - DL

Analyte	Result	Qualifier	RL	MDL	Unit	D	Prepared	Analyzed	Dil Fac
cis-1,2-Dichloroethene	**930**		20		ug/L			12/12/12 20:03	20

Surrogate	*%Recovery*	*Qualifier*	*Limits*	*Prepared*	*Analyzed*	*Dil Fac*
Toluene-d8 (Surr)	*111*		*70 - 130*		*12/12/12 20:03*	*20*
1,2-Dichloroethane-d4 (Surr)	*97*		*70 - 130*		*12/12/12 20:03*	*20*
4-Bromofluorobenzene (Surr)	*101*		*70 - 130*		*12/12/12 20:03*	*20*

Client Sample ID: REW-12-20121209-01

Lab Sample ID: 480-29929-7

Date Collected: 12/09/12 14:45

Matrix: Water

Date Received: 12/11/12 09:00

Method: 8260B SIM - Volatile Organic Compounds (GC/MS)

Analyte	Result	Qualifier	RL	MDL	Unit	D	Prepared	Analyzed	Dil Fac
1,4-Dioxane	**4.3**		1.6		ug/L			12/13/12 16:53	1

Method: 8260C - Volatile Organic Compounds (GC/MS)

Analyte	Result	Qualifier	RL	MDL	Unit	D	Prepared	Analyzed	Dil Fac
1,1,1,2-Tetrachloroethane	ND		4.0		ug/L			12/12/12 20:27	4
1,1,1-Trichloroethane	ND		4.0		ug/L			12/12/12 20:27	4
1,1,2,2-Tetrachloroethane	ND		2.0		ug/L			12/12/12 20:27	4
1,1,2-Trichloroethane	ND		4.0		ug/L			12/12/12 20:27	4
1,1-Dichloroethane	ND		4.0		ug/L			12/12/12 20:27	4
1,1-Dichloroethene	ND		4.0		ug/L			12/12/12 20:27	4
1,1-Dichloropropene	ND		4.0		ug/L			12/12/12 20:27	4
1,2,3-Trichlorobenzene	ND		4.0		ug/L			12/12/12 20:27	4
1,2,3-Trichloropropane	ND		4.0		ug/L			12/12/12 20:27	4
1,2,4-Trichlorobenzene	ND		4.0		ug/L			12/12/12 20:27	4
1,2,4-Trimethylbenzene	ND		4.0		ug/L			12/12/12 20:27	4
1,2-Dibromo-3-Chloropropane	ND		20		ug/L			12/12/12 20:27	4
1,2-Dichlorobenzene	ND		4.0		ug/L			12/12/12 20:27	4
1,2-Dichloroethane	ND		4.0		ug/L			12/12/12 20:27	4

Client Sample ID: REW-12-20121209-01
Date Collected: 12/09/12 14:45
Date Received: 12/11/12 09:00

Lab Sample ID: 480-29929-7
Matrix: Water

Method: 8260C - Volatile Organic Compounds (GC/MS) (Continued)

Analyte	Result	Qualifier	RL	MDL	Unit	D	Prepared	Analyzed	Dil Fac
1,2-Dichloropropane	ND		4.0		ug/L			12/12/12 20:27	4
1,3,5-Trimethylbenzene	ND		4.0		ug/L			12/12/12 20:27	4
1,3-Dichlorobenzene	ND		4.0		ug/L			12/12/12 20:27	4
1,3-Dichloropropane	ND		4.0		ug/L			12/12/12 20:27	4
1,4-Dichlorobenzene	ND		4.0		ug/L			12/12/12 20:27	4
1,4-Dioxane	ND		200		ug/L			12/12/12 20:27	4
2,2-Dichloropropane	ND		4.0		ug/L			12/12/12 20:27	4
2-Butanone (MEK)	ND	*	40		ug/L			12/12/12 20:27	4
2-Chlorotoluene	ND		4.0		ug/L			12/12/12 20:27	4
2-Hexanone	ND		40		ug/L			12/12/12 20:27	4
4-Chlorotoluene	ND		4.0		ug/L			12/12/12 20:27	4
4-Isopropyltoluene	ND		4.0		ug/L			12/12/12 20:27	4
4-Methyl-2-pentanone (MIBK)	ND		40		ug/L			12/12/12 20:27	4
Acetone	ND	*	200		ug/L			12/12/12 20:27	4
Benzene	ND		4.0		ug/L			12/12/12 20:27	4
Bromobenzene	ND		4.0		ug/L			12/12/12 20:27	4
Bromoform	ND		4.0		ug/L			12/12/12 20:27	4
Bromomethane	ND		8.0		ug/L			12/12/12 20:27	4
Carbon disulfide	ND		40		ug/L			12/12/12 20:27	4
Carbon tetrachloride	ND		4.0		ug/L			12/12/12 20:27	4
Chlorobenzene	ND		4.0		ug/L			12/12/12 20:27	4
Chlorobromomethane	ND		4.0		ug/L			12/12/12 20:27	4
Chlorodibromomethane	ND		2.0		ug/L			12/12/12 20:27	4
Chloroethane	ND		8.0		ug/L			12/12/12 20:27	4
Chloroform	ND		4.0		ug/L			12/12/12 20:27	4
Chloromethane	ND		8.0		ug/L			12/12/12 20:27	4
cis-1,2-Dichloroethene	**220**		4.0		ug/L			12/12/12 20:27	4
cis-1,3-Dichloropropene	ND		1.6		ug/L			12/12/12 20:27	4
Dichlorobromomethane	ND		2.0		ug/L			12/12/12 20:27	4
Dichlorodifluoromethane	ND		4.0		ug/L			12/12/12 20:27	4
Ethyl ether	ND		4.0		ug/L			12/12/12 20:27	4
Ethylbenzene	ND		4.0		ug/L			12/12/12 20:27	4
Ethylene Dibromide	ND		4.0		ug/L			12/12/12 20:27	4
Hexachlorobutadiene	ND		1.6		ug/L			12/12/12 20:27	4
Isopropyl ether	ND		40		ug/L			12/12/12 20:27	4
Isopropylbenzene	ND		4.0		ug/L			12/12/12 20:27	4
Methyl tert-butyl ether	ND		4.0		ug/L			12/12/12 20:27	4
Methylene Chloride	ND		4.0		ug/L			12/12/12 20:27	4
m-Xylene & p-Xylene	ND		8.0		ug/L			12/12/12 20:27	4
Naphthalene	ND		20		ug/L			12/12/12 20:27	4
n-Butylbenzene	ND		4.0		ug/L			12/12/12 20:27	4
N-Propylbenzene	ND		4.0		ug/L			12/12/12 20:27	4
o-Xylene	ND		4.0		ug/L			12/12/12 20:27	4
sec-Butylbenzene	ND		4.0		ug/L			12/12/12 20:27	4
Styrene	ND		4.0		ug/L			12/12/12 20:27	4
Tert-amyl methyl ether	ND		20		ug/L			12/12/12 20:27	4
Tert-butyl ethyl ether	ND		20		ug/L			12/12/12 20:27	4
tert-Butylbenzene	ND		4.0		ug/L			12/12/12 20:27	4
Tetrachloroethene	**8.0**		4.0		ug/L			12/12/12 20:27	4

Client Sample ID: REW-12-20121209-01

Lab Sample ID: 480-29929-7

Date Collected: 12/09/12 14:45

Matrix: Water

Date Received: 12/11/12 09:00

Method: 8260C - Volatile Organic Compounds (GC/MS) (Continued)

Analyte	Result	Qualifier	RL	MDL	Unit	D	Prepared	Analyzed	Dil Fac
Tetrahydrofuran	ND		40		ug/L			12/12/12 20:27	4
Toluene	ND		4.0		ug/L			12/12/12 20:27	4
trans-1,2-Dichloroethene	ND		4.0		ug/L			12/12/12 20:27	4
trans-1,3-Dichloropropene	ND		1.6		ug/L			12/12/12 20:27	4
Trichloroethene	**150**		4.0		ug/L			12/12/12 20:27	4
Trichlorofluoromethane	ND		4.0		ug/L			12/12/12 20:27	4
Vinyl chloride	**10**		2.0		ug/L			12/12/12 20:27	4
Dibromomethane	ND		4.0		ug/L			12/12/12 20:27	4

Surrogate	*%Recovery*	*Qualifier*	*Limits*	*Prepared*	*Analyzed*	*Dil Fac*
Toluene-d8 (Surr)	*114*		*70 - 130*		*12/12/12 20:27*	*4*
1,2-Dichloroethane-d4 (Surr)	*102*		*70 - 130*		*12/12/12 20:27*	*4*
4-Bromofluorobenzene (Surr)	*105*		*70 - 130*		*12/12/12 20:27*	*4*

Client Sample ID: MW-563-20121209-01

Lab Sample ID: 480-29929-8

Date Collected: 12/09/12 15:20

Matrix: Water

Date Received: 12/11/12 09:00

Method: 8260B SIM - Volatile Organic Compounds (GC/MS)

Analyte	Result	Qualifier	RL	MDL	Unit	D	Prepared	Analyzed	Dil Fac
1,4-Dioxane	**3.4**		1.6		ug/L			12/13/12 17:17	1

Method: 8260C - Volatile Organic Compounds (GC/MS)

Analyte	Result	Qualifier	RL	MDL	Unit	D	Prepared	Analyzed	Dil Fac
1,1,1,2-Tetrachloroethane	ND		5.0		ug/L			12/12/12 20:51	5
1,1,1-Trichloroethane	ND		5.0		ug/L			12/12/12 20:51	5
1,1,2,2-Tetrachloroethane	ND		2.5		ug/L			12/12/12 20:51	5
1,1,2-Trichloroethane	ND		5.0		ug/L			12/12/12 20:51	5
1,1-Dichloroethane	ND		5.0		ug/L			12/12/12 20:51	5
1,1-Dichloroethene	ND		5.0		ug/L			12/12/12 20:51	5
1,1-Dichloropropene	ND		5.0		ug/L			12/12/12 20:51	5
1,2,3-Trichlorobenzene	ND		5.0		ug/L			12/12/12 20:51	5
1,2,3-Trichloropropane	ND		5.0		ug/L			12/12/12 20:51	5
1,2,4-Trichlorobenzene	ND		5.0		ug/L			12/12/12 20:51	5
1,2,4-Trimethylbenzene	ND		5.0		ug/L			12/12/12 20:51	5
1,2-Dibromo-3-Chloropropane	ND		25		ug/L			12/12/12 20:51	5
1,2-Dichlorobenzene	ND		5.0		ug/L			12/12/12 20:51	5
1,2-Dichloroethane	ND		5.0		ug/L			12/12/12 20:51	5
1,2-Dichloropropane	ND		5.0		ug/L			12/12/12 20:51	5
1,3,5-Trimethylbenzene	ND		5.0		ug/L			12/12/12 20:51	5
1,3-Dichlorobenzene	ND		5.0		ug/L			12/12/12 20:51	5
1,3-Dichloropropane	ND		5.0		ug/L			12/12/12 20:51	5
1,4-Dichlorobenzene	ND		5.0		ug/L			12/12/12 20:51	5
1,4-Dioxane	ND		250		ug/L			12/12/12 20:51	5
2,2-Dichloropropane	ND		5.0		ug/L			12/12/12 20:51	5
2-Butanone (MEK)	ND	*	50		ug/L			12/12/12 20:51	5
2-Chlorotoluene	ND		5.0		ug/L			12/12/12 20:51	5
2-Hexanone	ND		50		ug/L			12/12/12 20:51	5
4-Chlorotoluene	ND		5.0		ug/L			12/12/12 20:51	5
4-Isopropyltoluene	ND		5.0		ug/L			12/12/12 20:51	5

Client Sample ID: MW-563-20121209-01

Lab Sample ID: 480-29929-8

Date Collected: 12/09/12 15:20

Matrix: Water

Date Received: 12/11/12 09:00

Method: 8260C - Volatile Organic Compounds (GC/MS) (Continued)

Analyte	Result	Qualifier	RL	MDL	Unit	D	Prepared	Analyzed	Dil Fac
4-Methyl-2-pentanone (MIBK)	ND		50		ug/L			12/12/12 20:51	5
Acetone	ND	*	250		ug/L			12/12/12 20:51	5
Benzene	ND		5.0		ug/L			12/12/12 20:51	5
Bromobenzene	ND		5.0		ug/L			12/12/12 20:51	5
Bromoform	ND		5.0		ug/L			12/12/12 20:51	5
Bromomethane	ND		10		ug/L			12/12/12 20:51	5
Carbon disulfide	ND		50		ug/L			12/12/12 20:51	5
Carbon tetrachloride	ND		5.0		ug/L			12/12/12 20:51	5
Chlorobenzene	ND		5.0		ug/L			12/12/12 20:51	5
Chlorobromomethane	ND		5.0		ug/L			12/12/12 20:51	5
Chlorodibromomethane	ND		2.5		ug/L			12/12/12 20:51	5
Chloroethane	ND		10		ug/L			12/12/12 20:51	5
Chloroform	ND		5.0		ug/L			12/12/12 20:51	5
Chloromethane	ND		10		ug/L			12/12/12 20:51	5
cis-1,2-Dichloroethene	**250**		5.0		ug/L			12/12/12 20:51	5
cis-1,3-Dichloropropene	ND		2.0		ug/L			12/12/12 20:51	5
Dichlorobromomethane	ND		2.5		ug/L			12/12/12 20:51	5
Dichlorodifluoromethane	ND		5.0		ug/L			12/12/12 20:51	5
Ethyl ether	ND		5.0		ug/L			12/12/12 20:51	5
Ethylbenzene	ND		5.0		ug/L			12/12/12 20:51	5
Ethylene Dibromide	ND		5.0		ug/L			12/12/12 20:51	5
Hexachlorobutadiene	ND		2.0		ug/L			12/12/12 20:51	5
Isopropyl ether	ND		50		ug/L			12/12/12 20:51	5
Isopropylbenzene	ND		5.0		ug/L			12/12/12 20:51	5
Methyl tert-butyl ether	ND		5.0		ug/L			12/12/12 20:51	5
Methylene Chloride	ND		5.0		ug/L			12/12/12 20:51	5
m-Xylene & p-Xylene	ND		10		ug/L			12/12/12 20:51	5
Naphthalene	ND		25		ug/L			12/12/12 20:51	5
n-Butylbenzene	ND		5.0		ug/L			12/12/12 20:51	5
N-Propylbenzene	ND		5.0		ug/L			12/12/12 20:51	5
o-Xylene	ND		5.0		ug/L			12/12/12 20:51	5
sec-Butylbenzene	ND		5.0		ug/L			12/12/12 20:51	5
Styrene	ND		5.0		ug/L			12/12/12 20:51	5
Tert-amyl methyl ether	ND		25		ug/L			12/12/12 20:51	5
Tert-butyl ethyl ether	ND		25		ug/L			12/12/12 20:51	5
tert-Butylbenzene	ND		5.0		ug/L			12/12/12 20:51	5
Tetrachloroethene	ND		5.0		ug/L			12/12/12 20:51	5
Tetrahydrofuran	ND		50		ug/L			12/12/12 20:51	5
Toluene	ND		5.0		ug/L			12/12/12 20:51	5
trans-1,2-Dichloroethene	ND		5.0		ug/L			12/12/12 20:51	5
trans-1,3-Dichloropropene	ND		2.0		ug/L			12/12/12 20:51	5
Trichloroethene	**260**		5.0		ug/L			12/12/12 20:51	5
Trichlorofluoromethane	ND		5.0		ug/L			12/12/12 20:51	5
Vinyl chloride	**35**		2.5		ug/L			12/12/12 20:51	5
Dibromomethane	ND		5.0		ug/L			12/12/12 20:51	5

Surrogate	*%Recovery*	*Qualifier*	*Limits*	*Prepared*	*Analyzed*	*Dil Fac*
Toluene-d8 (Surr)	*108*		*70 - 130*		*12/12/12 20:51*	*5*
1,2-Dichloroethane-d4 (Surr)	*101*		*70 - 130*		*12/12/12 20:51*	*5*
4-Bromofluorobenzene (Surr)	*98*		*70 - 130*		*12/12/12 20:51*	*5*

Client Sample Results

Client: Innovative Engineering Solutions, Inc
Project/Site: IDS Wayland

TestAmerica Job ID: 480-29929-1

Client Sample ID: DUPX-20121209-01

Lab Sample ID: 480-29929-9

Date Collected: 12/09/12 00:00

Matrix: Water

Date Received: 12/11/12 09:00

Method: 8260B SIM - Volatile Organic Compounds (GC/MS)

Analyte	Result	Qualifier	RL	MDL	Unit	D	Prepared	Analyzed	Dil Fac
1,4-Dioxane	**2.5**		1.6		ug/L			12/13/12 17:41	1

Method: 8260C - Volatile Organic Compounds (GC/MS)

Analyte	Result	Qualifier	RL	MDL	Unit	D	Prepared	Analyzed	Dil Fac
1,1,1,2-Tetrachloroethane	ND		5.0		ug/L			12/13/12 14:07	5
1,1,1-Trichloroethane	ND		5.0		ug/L			12/13/12 14:07	5
1,1,2,2-Tetrachloroethane	ND		2.5		ug/L			12/13/12 14:07	5
1,1,2-Trichloroethane	ND		5.0		ug/L			12/13/12 14:07	5
1,1-Dichloroethane	ND		5.0		ug/L			12/13/12 14:07	5
1,1-Dichloroethene	ND		5.0		ug/L			12/13/12 14:07	5
1,1-Dichloropropene	ND		5.0		ug/L			12/13/12 14:07	5
1,2,3-Trichlorobenzene	ND		5.0		ug/L			12/13/12 14:07	5
1,2,3-Trichloropropane	ND		5.0		ug/L			12/13/12 14:07	5
1,2,4-Trichlorobenzene	ND		5.0		ug/L			12/13/12 14:07	5
1,2,4-Trimethylbenzene	ND		5.0		ug/L			12/13/12 14:07	5
1,2-Dibromo-3-Chloropropane	ND		25		ug/L			12/13/12 14:07	5
1,2-Dichlorobenzene	ND		5.0		ug/L			12/13/12 14:07	5
1,2-Dichloroethane	ND		5.0		ug/L			12/13/12 14:07	5
1,2-Dichloropropane	ND		5.0		ug/L			12/13/12 14:07	5
1,3,5-Trimethylbenzene	ND		5.0		ug/L			12/13/12 14:07	5
1,3-Dichlorobenzene	ND		5.0		ug/L			12/13/12 14:07	5
1,3-Dichloropropane	ND		5.0		ug/L			12/13/12 14:07	5
1,4-Dichlorobenzene	ND		5.0		ug/L			12/13/12 14:07	5
1,4-Dioxane	ND	*	250		ug/L			12/13/12 14:07	5
2,2-Dichloropropane	ND		5.0		ug/L			12/13/12 14:07	5
2-Butanone (MEK)	ND	*	50		ug/L			12/13/12 14:07	5
2-Chlorotoluene	ND		5.0		ug/L			12/13/12 14:07	5
2-Hexanone	ND		50		ug/L			12/13/12 14:07	5
4-Chlorotoluene	ND		5.0		ug/L			12/13/12 14:07	5
4-Isopropyltoluene	ND		5.0		ug/L			12/13/12 14:07	5
4-Methyl-2-pentanone (MIBK)	ND		50		ug/L			12/13/12 14:07	5
Acetone	ND		250		ug/L			12/13/12 14:07	5
Benzene	ND		5.0		ug/L			12/13/12 14:07	5
Bromobenzene	ND		5.0		ug/L			12/13/12 14:07	5
Bromoform	ND		5.0		ug/L			12/13/12 14:07	5
Bromomethane	ND		10		ug/L			12/13/12 14:07	5
Carbon disulfide	ND		50		ug/L			12/13/12 14:07	5
Carbon tetrachloride	ND		5.0		ug/L			12/13/12 14:07	5
Chlorobenzene	ND		5.0		ug/L			12/13/12 14:07	5
Chlorobromomethane	ND		5.0		ug/L			12/13/12 14:07	5
Chlorodibromomethane	ND		2.5		ug/L			12/13/12 14:07	5
Chloroethane	ND		10		ug/L			12/13/12 14:07	5
Chloroform	ND		5.0		ug/L			12/13/12 14:07	5
Chloromethane	ND		10		ug/L			12/13/12 14:07	5
cis-1,2-Dichloroethene	**330**		5.0		ug/L			12/13/12 14:07	5
cis-1,3-Dichloropropene	ND		2.0		ug/L			12/13/12 14:07	5
Dichlorobromomethane	ND		2.5		ug/L			12/13/12 14:07	5
Dichlorodifluoromethane	ND	*	5.0		ug/L			12/13/12 14:07	5
Ethyl ether	ND		5.0		ug/L			12/13/12 14:07	5

Client Sample ID: DUPX-20121209-01

Lab Sample ID: 480-29929-9

Date Collected: 12/09/12 00:00

Matrix: Water

Date Received: 12/11/12 09:00

Method: 8260C - Volatile Organic Compounds (GC/MS) (Continued)

Analyte	Result	Qualifier	RL	MDL	Unit	D	Prepared	Analyzed	Dil Fac
Ethylbenzene	ND		5.0		ug/L			12/13/12 14:07	5
Ethylene Dibromide	ND		5.0		ug/L			12/13/12 14:07	5
Hexachlorobutadiene	ND		2.0		ug/L			12/13/12 14:07	5
Isopropyl ether	ND		50		ug/L			12/13/12 14:07	5
Isopropylbenzene	ND		5.0		ug/L			12/13/12 14:07	5
Methyl tert-butyl ether	ND		5.0		ug/L			12/13/12 14:07	5
Methylene Chloride	ND		5.0		ug/L			12/13/12 14:07	5
m-Xylene & p-Xylene	ND		10		ug/L			12/13/12 14:07	5
Naphthalene	ND		25		ug/L			12/13/12 14:07	5
n-Butylbenzene	ND		5.0		ug/L			12/13/12 14:07	5
N-Propylbenzene	ND		5.0		ug/L			12/13/12 14:07	5
o-Xylene	ND		5.0		ug/L			12/13/12 14:07	5
sec-Butylbenzene	ND		5.0		ug/L			12/13/12 14:07	5
Styrene	ND		5.0		ug/L			12/13/12 14:07	5
Tert-amyl methyl ether	ND		25		ug/L			12/13/12 14:07	5
Tert-butyl ethyl ether	ND		25		ug/L			12/13/12 14:07	5
tert-Butylbenzene	ND		5.0		ug/L			12/13/12 14:07	5
Tetrachloroethene	**6.8**		5.0		ug/L			12/13/12 14:07	5
Tetrahydrofuran	ND		50		ug/L			12/13/12 14:07	5
Toluene	ND		5.0		ug/L			12/13/12 14:07	5
trans-1,2-Dichloroethene	ND		5.0		ug/L			12/13/12 14:07	5
trans-1,3-Dichloropropene	ND		2.0		ug/L			12/13/12 14:07	5
Trichloroethene	**350**		5.0		ug/L			12/13/12 14:07	5
Trichlorofluoromethane	ND		5.0		ug/L			12/13/12 14:07	5
Vinyl chloride	**50**		2.5		ug/L			12/13/12 14:07	5
Dibromomethane	ND		5.0		ug/L			12/13/12 14:07	5

Surrogate	*%Recovery*	*Qualifier*	*Limits*	*Prepared*	*Analyzed*	*Dil Fac*
Toluene-d8 (Surr)	*116*		*70 - 130*		*12/13/12 14:07*	*5*
1,2-Dichloroethane-d4 (Surr)	*120*		*70 - 130*		*12/13/12 14:07*	*5*
4-Bromofluorobenzene (Surr)	*114*		*70 - 130*		*12/13/12 14:07*	*5*

Client Sample ID: TRIP BLANK

Lab Sample ID: 480-29929-10

Date Collected: 12/09/12 00:00

Matrix: Water

Date Received: 12/11/12 09:00

Method: 8260B SIM - Volatile Organic Compounds (GC/MS)

Analyte	Result	Qualifier	RL	MDL	Unit	D	Prepared	Analyzed	Dil Fac
1,4-Dioxane	ND		1.6		ug/L			12/13/12 18:05	1

Method: 8260C - Volatile Organic Compounds (GC/MS)

Analyte	Result	Qualifier	RL	MDL	Unit	D	Prepared	Analyzed	Dil Fac
1,1,1,2-Tetrachloroethane	ND		1.0		ug/L			12/13/12 14:31	1
1,1,1-Trichloroethane	ND		1.0		ug/L			12/13/12 14:31	1
1,1,2,2-Tetrachloroethane	ND		0.50		ug/L			12/13/12 14:31	1
1,1,2-Trichloroethane	ND		1.0		ug/L			12/13/12 14:31	1
1,1-Dichloroethane	ND		1.0		ug/L			12/13/12 14:31	1
1,1-Dichloroethene	ND		1.0		ug/L			12/13/12 14:31	1
1,1-Dichloropropene	ND		1.0		ug/L			12/13/12 14:31	1
1,2,3-Trichlorobenzene	ND		1.0		ug/L			12/13/12 14:31	1

Client: Innovative Engineering Solutions, Inc
Project/Site: IDS Wayland

TestAmerica Job ID: 480-29929-1

Client Sample ID: TRIP BLANK
Date Collected: 12/09/12 00:00
Date Received: 12/11/12 09:00

Lab Sample ID: 480-29929-10
Matrix: Water

Method: 8260C - Volatile Organic Compounds (GC/MS) (Continued)

Analyte	Result	Qualifier	RL	MDL	Unit	D	Prepared	Analyzed	Dil Fac
1,2,3-Trichloropropane	ND		1.0		ug/L			12/13/12 14:31	1
1,2,4-Trichlorobenzene	ND		1.0		ug/L			12/13/12 14:31	1
1,2,4-Trimethylbenzene	ND		1.0		ug/L			12/13/12 14:31	1
1,2-Dibromo-3-Chloropropane	ND		5.0		ug/L			12/13/12 14:31	1
1,2-Dichlorobenzene	ND		1.0		ug/L			12/13/12 14:31	1
1,2-Dichloroethane	ND		1.0		ug/L			12/13/12 14:31	1
1,2-Dichloropropane	ND		1.0		ug/L			12/13/12 14:31	1
1,3,5-Trimethylbenzene	ND		1.0		ug/L			12/13/12 14:31	1
1,3-Dichlorobenzene	ND		1.0		ug/L			12/13/12 14:31	1
1,3-Dichloropropane	ND		1.0		ug/L			12/13/12 14:31	1
1,4-Dichlorobenzene	ND		1.0		ug/L			12/13/12 14:31	1
1,4-Dioxane	ND	*	50		ug/L			12/13/12 14:31	1
2,2-Dichloropropane	ND		1.0		ug/L			12/13/12 14:31	1
2-Butanone (MEK)	ND	*	10		ug/L			12/13/12 14:31	1
2-Chlorotoluene	ND		1.0		ug/L			12/13/12 14:31	1
2-Hexanone	ND		10		ug/L			12/13/12 14:31	1
4-Chlorotoluene	ND		1.0		ug/L			12/13/12 14:31	1
4-Isopropyltoluene	ND		1.0		ug/L			12/13/12 14:31	1
4-Methyl-2-pentanone (MIBK)	ND		10		ug/L			12/13/12 14:31	1
Acetone	ND		50		ug/L			12/13/12 14:31	1
Benzene	ND		1.0		ug/L			12/13/12 14:31	1
Bromobenzene	ND		1.0		ug/L			12/13/12 14:31	1
Bromoform	ND		1.0		ug/L			12/13/12 14:31	1
Bromomethane	ND		2.0		ug/L			12/13/12 14:31	1
Carbon disulfide	ND		10		ug/L			12/13/12 14:31	1
Carbon tetrachloride	ND		1.0		ug/L			12/13/12 14:31	1
Chlorobenzene	ND		1.0		ug/L			12/13/12 14:31	1
Chlorobromomethane	ND		1.0		ug/L			12/13/12 14:31	1
Chlorodibromomethane	ND		0.50		ug/L			12/13/12 14:31	1
Chloroethane	ND		2.0		ug/L			12/13/12 14:31	1
Chloroform	ND		1.0		ug/L			12/13/12 14:31	1
Chloromethane	ND		2.0		ug/L			12/13/12 14:31	1
cis-1,2-Dichloroethene	ND		1.0		ug/L			12/13/12 14:31	1
cis-1,3-Dichloropropene	ND		0.40		ug/L			12/13/12 14:31	1
Dichlorobromomethane	ND		0.50		ug/L			12/13/12 14:31	1
Dichlorodifluoromethane	ND	*	1.0		ug/L			12/13/12 14:31	1
Ethyl ether	ND		1.0		ug/L			12/13/12 14:31	1
Ethylbenzene	ND		1.0		ug/L			12/13/12 14:31	1
Ethylene Dibromide	ND		1.0		ug/L			12/13/12 14:31	1
Hexachlorobutadiene	ND		0.40		ug/L			12/13/12 14:31	1
Isopropyl ether	ND		10		ug/L			12/13/12 14:31	1
Isopropylbenzene	ND		1.0		ug/L			12/13/12 14:31	1
Methyl tert-butyl ether	ND		1.0		ug/L			12/13/12 14:31	1
Methylene Chloride	ND		1.0		ug/L			12/13/12 14:31	1
m-Xylene & p-Xylene	ND		2.0		ug/L			12/13/12 14:31	1
Naphthalene	ND		5.0		ug/L			12/13/12 14:31	1
n-Butylbenzene	ND		1.0		ug/L			12/13/12 14:31	1
N-Propylbenzene	ND		1.0		ug/L			12/13/12 14:31	1
o-Xylene	ND		1.0		ug/L			12/13/12 14:31	1

Client Sample ID: TRIP BLANK

Lab Sample ID: 480-29929-10

Date Collected: 12/09/12 00:00

Matrix: Water

Date Received: 12/11/12 09:00

Method: 8260C - Volatile Organic Compounds (GC/MS) (Continued)

Analyte	Result	Qualifier	RL	MDL	Unit	D	Prepared	Analyzed	Dil Fac
sec-Butylbenzene	ND		1.0		ug/L			12/13/12 14:31	1
Styrene	ND		1.0		ug/L			12/13/12 14:31	1
Tert-amyl methyl ether	ND		5.0		ug/L			12/13/12 14:31	1
Tert-butyl ethyl ether	ND		5.0		ug/L			12/13/12 14:31	1
tert-Butylbenzene	ND		1.0		ug/L			12/13/12 14:31	1
Tetrachloroethene	ND		1.0		ug/L			12/13/12 14:31	1
Tetrahydrofuran	ND		10		ug/L			12/13/12 14:31	1
Toluene	ND		1.0		ug/L			12/13/12 14:31	1
trans-1,2-Dichloroethene	ND		1.0		ug/L			12/13/12 14:31	1
trans-1,3-Dichloropropene	ND		0.40		ug/L			12/13/12 14:31	1
Trichloroethene	ND		1.0		ug/L			12/13/12 14:31	1
Trichlorofluoromethane	ND		1.0		ug/L			12/13/12 14:31	1
Vinyl chloride	ND		0.50		ug/L			12/13/12 14:31	1
Dibromomethane	ND		1.0		ug/L			12/13/12 14:31	1

Surrogate	*%Recovery*	*Qualifier*	*Limits*	*Prepared*	*Analyzed*	*Dil Fac*
Toluene-d8 (Surr)	*115*		*70 - 130*		*12/13/12 14:31*	*1*
1,2-Dichloroethane-d4 (Surr)	*123*		*70 - 130*		*12/13/12 14:31*	*1*
4-Bromofluorobenzene (Surr)	*112*		*70 - 130*		*12/13/12 14:31*	*1*

Surrogate Summary

Client: Innovative Engineering Solutions, Inc
Project/Site: IDS Wayland

TestAmerica Job ID: 480-29929-1

Method: 8260C - Volatile Organic Compounds (GC/MS)

Matrix: Water **Prep Type: Total/NA**

		Percent Surrogate Recovery (Acceptance Limits)		
		TOL	12DCE	BFB
Lab Sample ID	Client Sample ID	(70-130)	(70-130)	(70-130)
480-29929-1	REW-6-20121209-01	114	105	111
480-29929-2	REW-7-20121209-01	117	111	107
480-29929-3	REW-8-20121209-01	113	101	102
480-29929-4	REW-9-20121209-01	115	101	108
480-29929-5	REW-10-20121209-01	116	104	106
480-29929-6	REW-11-20121209-01	113	109	106
480-29929-6 - DL	REW-11-20121209-01	111	97	101
480-29929-7	REW-12-20121209-01	114	102	105
480-29929-8	MW-563-20121209-01	108	101	98
480-29929-9	DUPX-20121209-01	116	120	114
480-29929-10	TRIP BLANK	115	123	112
LCS 480-95291/4	Lab Control Sample	117	108	112
LCS 480-95390/4	Lab Control Sample	115	105	112
LCS 480-95590/4	Lab Control Sample	118	116	120
LCSD 480-95291/5	Lab Control Sample Dup	115	107	109
LCSD 480-95390/5	Lab Control Sample Dup	113	103	107
LCSD 480-95590/5	Lab Control Sample Dup	117	113	114
MB 480-95291/7	Method Blank	115	115	109
MB 480-95390/7	Method Blank	113	112	107
MB 480-95590/7	Method Blank	120	119	117

Surrogate Legend

TOL = Toluene-d8 (Surr)

12DCE = 1,2-Dichloroethane-d4 (Surr)

BFB = 4-Bromofluorobenzene (Surr)

Method: 8260B SIM - Volatile Organic Compounds (GC/MS)

Lab Sample ID: MB 480-95564/4 — **Client Sample ID: Method Blank**
Matrix: Water — **Prep Type: Total/NA**
Analysis Batch: 95564

Analyte	MB Result	MB Qualifier	RL	MDL	Unit	D	Prepared	Analyzed	Dil Fac
1,4-Dioxane	ND		1.6		ug/L			12/13/12 11:16	1

Lab Sample ID: LCS 480-95564/2 — **Client Sample ID: Lab Control Sample**
Matrix: Water — **Prep Type: Total/NA**
Analysis Batch: 95564

Analyte	Spike Added	LCS Result	LCS Qualifier	Unit	D	%Rec	%Rec. Limits
1,4-Dioxane	16.0	13.7		ug/L		86	50 - 150

Lab Sample ID: LCSD 480-95564/3 — **Client Sample ID: Lab Control Sample Dup**
Matrix: Water — **Prep Type: Total/NA**
Analysis Batch: 95564

Analyte	Spike Added	LCSD Result	LCSD Qualifier	Unit	D	%Rec	%Rec. Limits	RPD	RPD Limit
1,4-Dioxane	16.0	14.8		ug/L		93	50 - 150	8	30

Method: 8260C - Volatile Organic Compounds (GC/MS)

Lab Sample ID: MB 480-95291/7 — **Client Sample ID: Method Blank**
Matrix: Water — **Prep Type: Total/NA**
Analysis Batch: 95291

Analyte	MB Result	MB Qualifier	RL	MDL	Unit	D	Prepared	Analyzed	Dil Fac
1,1,1,2-Tetrachloroethane	ND		1.0		ug/L			12/11/12 23:40	1
1,1,1-Trichloroethane	ND		1.0		ug/L			12/11/12 23:40	1
1,1,2,2-Tetrachloroethane	ND		0.50		ug/L			12/11/12 23:40	1
1,1,2-Trichloroethane	ND		1.0		ug/L			12/11/12 23:40	1
1,1-Dichloroethane	ND		1.0		ug/L			12/11/12 23:40	1
1,1-Dichloroethene	ND		1.0		ug/L			12/11/12 23:40	1
1,1-Dichloropropene	ND		1.0		ug/L			12/11/12 23:40	1
1,2,3-Trichlorobenzene	ND		1.0		ug/L			12/11/12 23:40	1
1,2,3-Trichloropropane	ND		1.0		ug/L			12/11/12 23:40	1
1,2,4-Trichlorobenzene	ND		1.0		ug/L			12/11/12 23:40	1
1,2,4-Trimethylbenzene	ND		1.0		ug/L			12/11/12 23:40	1
1,2-Dibromo-3-Chloropropane	ND		5.0		ug/L			12/11/12 23:40	1
1,2-Dichlorobenzene	ND		1.0		ug/L			12/11/12 23:40	1
1,2-Dichloroethane	ND		1.0		ug/L			12/11/12 23:40	1
1,2-Dichloropropane	ND		1.0		ug/L			12/11/12 23:40	1
1,3,5-Trimethylbenzene	ND		1.0		ug/L			12/11/12 23:40	1
1,3-Dichlorobenzene	ND		1.0		ug/L			12/11/12 23:40	1
1,3-Dichloropropane	ND		1.0		ug/L			12/11/12 23:40	1
1,4-Dichlorobenzene	ND		1.0		ug/L			12/11/12 23:40	1
1,4-Dioxane	ND		50		ug/L			12/11/12 23:40	1
2,2-Dichloropropane	ND		1.0		ug/L			12/11/12 23:40	1
2-Butanone (MEK)	ND		10		ug/L			12/11/12 23:40	1
2-Chlorotoluene	ND		1.0		ug/L			12/11/12 23:40	1
2-Hexanone	ND		10		ug/L			12/11/12 23:40	1
4-Chlorotoluene	ND		1.0		ug/L			12/11/12 23:40	1

Method: 8260C - Volatile Organic Compounds (GC/MS) (Continued)

Lab Sample ID: MB 480-95291/7
Matrix: Water
Analysis Batch: 95291

Client Sample ID: Method Blank
Prep Type: Total/NA

Analyte	MB Result	MB Qualifier	RL	MDL	Unit	D	Prepared	Analyzed	Dil Fac
4-Isopropyltoluene	ND		1.0		ug/L			12/11/12 23:40	1
4-Methyl-2-pentanone (MIBK)	ND		10		ug/L			12/11/12 23:40	1
Acetone	ND		50		ug/L			12/11/12 23:40	1
Benzene	ND		1.0		ug/L			12/11/12 23:40	1
Bromobenzene	ND		1.0		ug/L			12/11/12 23:40	1
Bromoform	ND		1.0		ug/L			12/11/12 23:40	1
Bromomethane	ND		2.0		ug/L			12/11/12 23:40	1
Carbon disulfide	ND		10		ug/L			12/11/12 23:40	1
Carbon tetrachloride	ND		1.0		ug/L			12/11/12 23:40	1
Chlorobenzene	ND		1.0		ug/L			12/11/12 23:40	1
Chlorobromomethane	ND		1.0		ug/L			12/11/12 23:40	1
Chlorodibromomethane	ND		0.50		ug/L			12/11/12 23:40	1
Chloroethane	ND		2.0		ug/L			12/11/12 23:40	1
Chloroform	ND		1.0		ug/L			12/11/12 23:40	1
Chloromethane	ND		2.0		ug/L			12/11/12 23:40	1
cis-1,2-Dichloroethene	ND		1.0		ug/L			12/11/12 23:40	1
cis-1,3-Dichloropropene	ND		0.40		ug/L			12/11/12 23:40	1
Dichlorobromomethane	ND		0.50		ug/L			12/11/12 23:40	1
Dichlorodifluoromethane	ND		1.0		ug/L			12/11/12 23:40	1
Ethyl ether	ND		1.0		ug/L			12/11/12 23:40	1
Ethylbenzene	ND		1.0		ug/L			12/11/12 23:40	1
Ethylene Dibromide	ND		1.0		ug/L			12/11/12 23:40	1
Hexachlorobutadiene	ND		0.40		ug/L			12/11/12 23:40	1
Isopropyl ether	ND		10		ug/L			12/11/12 23:40	1
Isopropylbenzene	ND		1.0		ug/L			12/11/12 23:40	1
Methyl tert-butyl ether	ND		1.0		ug/L			12/11/12 23:40	1
Methylene Chloride	ND		1.0		ug/L			12/11/12 23:40	1
m-Xylene & p-Xylene	ND		2.0		ug/L			12/11/12 23:40	1
Naphthalene	ND		5.0		ug/L			12/11/12 23:40	1
n-Butylbenzene	ND		1.0		ug/L			12/11/12 23:40	1
N-Propylbenzene	ND		1.0		ug/L			12/11/12 23:40	1
o-Xylene	ND		1.0		ug/L			12/11/12 23:40	1
sec-Butylbenzene	ND		1.0		ug/L			12/11/12 23:40	1
Styrene	ND		1.0		ug/L			12/11/12 23:40	1
Tert-amyl methyl ether	ND		5.0		ug/L			12/11/12 23:40	1
Tert-butyl ethyl ether	ND		5.0		ug/L			12/11/12 23:40	1
tert-Butylbenzene	ND		1.0		ug/L			12/11/12 23:40	1
Tetrachloroethene	ND		1.0		ug/L			12/11/12 23:40	1
Tetrahydrofuran	ND		10		ug/L			12/11/12 23:40	1
Toluene	ND		1.0		ug/L			12/11/12 23:40	1
trans-1,2-Dichloroethene	ND		1.0		ug/L			12/11/12 23:40	1
trans-1,3-Dichloropropene	ND		0.40		ug/L			12/11/12 23:40	1
Trichloroethene	ND		1.0		ug/L			12/11/12 23:40	1
Trichlorofluoromethane	ND		1.0		ug/L			12/11/12 23:40	1
Vinyl chloride	ND		0.50		ug/L			12/11/12 23:40	1
Dibromomethane	ND		1.0		ug/L			12/11/12 23:40	1

Method: 8260C - Volatile Organic Compounds (GC/MS) (Continued)

Lab Sample ID: MB 480-95291/7
Matrix: Water
Analysis Batch: 95291

Client Sample ID: Method Blank
Prep Type: Total/NA

Surrogate	MB %Recovery	MB Qualifier	Limits	Prepared	Analyzed	Dil Fac
Toluene-d8 (Surr)	115		70 - 130		12/11/12 23:40	1
1,2-Dichloroethane-d4 (Surr)	115		70 - 130		12/11/12 23:40	1
4-Bromofluorobenzene (Surr)	109		70 - 130		12/11/12 23:40	1

Lab Sample ID: LCS 480-95291/4
Matrix: Water
Analysis Batch: 95291

Client Sample ID: Lab Control Sample
Prep Type: Total/NA

Analyte	Spike Added	LCS Result	LCS Qualifier	Unit	D	%Rec	%Rec. Limits
1,1,1,2-Tetrachloroethane	25.0	23.7		ug/L		95	70 - 130
1,1,1-Trichloroethane	25.0	25.5		ug/L		102	70 - 130
1,1,2,2-Tetrachloroethane	25.0	24.0		ug/L		96	70 - 130
1,1,2-Trichloroethane	25.0	24.0		ug/L		96	70 - 130
1,1-Dichloroethane	25.0	23.6		ug/L		94	70 - 130
1,1-Dichloroethene	25.0	23.6		ug/L		94	70 - 130
1,1-Dichloropropene	25.0	23.6		ug/L		94	70 - 130
1,2,3-Trichlorobenzene	25.0	22.7		ug/L		91	70 - 130
1,2,3-Trichloropropane	25.0	26.2		ug/L		105	70 - 130
1,2,4-Trichlorobenzene	25.0	24.9		ug/L		100	70 - 130
1,2,4-Trimethylbenzene	25.0	25.7		ug/L		103	70 - 130
1,2-Dibromo-3-Chloropropane	25.0	26.2		ug/L		105	70 - 130
1,2-Dichlorobenzene	25.0	24.4		ug/L		97	70 - 130
1,2-Dichloroethane	25.0	25.3		ug/L		101	70 - 130
1,2-Dichloropropane	25.0	23.0		ug/L		92	70 - 130
1,3,5-Trimethylbenzene	25.0	26.3		ug/L		105	70 - 130
1,3-Dichlorobenzene	25.0	24.9		ug/L		100	70 - 130
1,3-Dichloropropane	25.0	23.5		ug/L		94	70 - 130
1,4-Dichlorobenzene	25.0	24.4		ug/L		97	70 - 130
1,4-Dioxane	1000	794		ug/L		79	70 - 130
2,2-Dichloropropane	25.0	23.8		ug/L		95	70 - 130
2-Butanone (MEK)	125	162		ug/L		130	70 - 130
2-Chlorotoluene	25.0	24.9		ug/L		100	70 - 130
2-Hexanone	125	127		ug/L		101	70 - 130
4-Chlorotoluene	25.0	24.2		ug/L		97	70 - 130
4-Isopropyltoluene	25.0	26.6		ug/L		106	70 - 130
4-Methyl-2-pentanone (MIBK)	125	121		ug/L		97	70 - 130
Acetone	125	106		ug/L		84	70 - 130
Benzene	25.0	23.5		ug/L		94	70 - 130
Bromobenzene	25.0	24.5		ug/L		98	70 - 130
Bromoform	25.0	21.0		ug/L		84	70 - 130
Bromomethane	25.0	23.3		ug/L		93	70 - 130
Carbon disulfide	25.0	21.1		ug/L		85	70 - 130
Carbon tetrachloride	25.0	26.3		ug/L		105	70 - 130
Chlorobenzene	25.0	24.5		ug/L		98	70 - 130
Chlorobromomethane	25.0	22.3		ug/L		89	70 - 130
Chlorodibromomethane	25.0	23.2		ug/L		93	70 - 130
Chloroethane	25.0	20.6		ug/L		82	70 - 130
Chloroform	25.0	24.2		ug/L		97	70 - 130

Method: 8260C - Volatile Organic Compounds (GC/MS) (Continued)

Lab Sample ID: LCS 480-95291/4
Matrix: Water
Analysis Batch: 95291

Client Sample ID: Lab Control Sample
Prep Type: Total/NA

Analyte	Spike Added	LCS Result	LCS Qualifier	Unit	D	%Rec	%Rec. Limits
Chloromethane	25.0	21.4		ug/L		86	70 - 130
cis-1,2-Dichloroethene	25.0	23.4		ug/L		94	70 - 130
cis-1,3-Dichloropropene	25.0	23.6		ug/L		94	70 - 130
Dichlorobromomethane	25.0	24.7		ug/L		99	70 - 130
Dichlorodifluoromethane	50.0	39.1		ug/L		78	70 - 130
Ethyl ether	25.0	20.9		ug/L		84	70 - 130
Ethylbenzene	25.0	24.8		ug/L		99	70 - 130
Ethylene Dibromide	25.0	24.9		ug/L		100	70 - 130
Hexachlorobutadiene	25.0	26.1		ug/L		104	70 - 130
Isopropyl ether	25.0	22.0		ug/L		88	70 - 130
Isopropylbenzene	25.0	25.7		ug/L		103	70 - 130
Methyl tert-butyl ether	25.0	22.3		ug/L		89	70 - 130
Methylene Chloride	25.0	22.6		ug/L		90	70 - 130
m-Xylene & p-Xylene	50.0	51.1		ug/L		102	70 - 130
Naphthalene	25.0	23.3		ug/L		93	70 - 130
n-Butylbenzene	25.0	26.4		ug/L		106	70 - 130
N-Propylbenzene	25.0	26.1		ug/L		104	70 - 130
o-Xylene	25.0	23.9		ug/L		95	70 - 130
sec-Butylbenzene	25.0	25.6		ug/L		102	70 - 130
Styrene	25.0	24.3		ug/L		97	70 - 130
Tert-amyl methyl ether	25.0	20.4		ug/L		82	70 - 130
Tert-butyl ethyl ether	25.0	20.5		ug/L		82	70 - 130
tert-Butylbenzene	25.0	26.2		ug/L		105	70 - 130
Tetrachloroethene	25.0	26.5		ug/L		106	70 - 130
Tetrahydrofuran	125	113		ug/L		90	70 - 130
Toluene	25.0	24.3		ug/L		97	70 - 130
trans-1,2-Dichloroethene	25.0	23.9		ug/L		96	70 - 130
trans-1,3-Dichloropropene	25.0	20.9		ug/L		84	70 - 130
Trichloroethene	25.0	25.7		ug/L		103	70 - 130
Trichlorofluoromethane	25.0	24.9		ug/L		99	70 - 130
Vinyl chloride	25.0	21.3		ug/L		85	70 - 130
Dibromomethane	25.0	24.2		ug/L		97	70 - 130

Surrogate	*LCS %Recovery*	*LCS Qualifier*	*Limits*
Toluene-d8 (Surr)	*117*		*70 - 130*
1,2-Dichloroethane-d4 (Surr)	*108*		*70 - 130*
4-Bromofluorobenzene (Surr)	*112*		*70 - 130*

Lab Sample ID: LCSD 480-95291/5
Matrix: Water
Analysis Batch: 95291

Client Sample ID: Lab Control Sample Dup
Prep Type: Total/NA

Analyte	Spike Added	LCSD Result	LCSD Qualifier	Unit	D	%Rec	%Rec. Limits	RPD	RPD Limit
1,1,1,2-Tetrachloroethane	25.0	24.0		ug/L		96	70 - 130	1	20
1,1,1-Trichloroethane	25.0	24.9		ug/L		100	70 - 130	2	20
1,1,2,2-Tetrachloroethane	25.0	24.4		ug/L		98	70 - 130	2	20
1,1,2-Trichloroethane	25.0	23.4		ug/L		93	70 - 130	3	20
1,1-Dichloroethane	25.0	22.7		ug/L		91	70 - 130	4	20

Method: 8260C - Volatile Organic Compounds (GC/MS) (Continued)

Lab Sample ID: LCSD 480-95291/5
Matrix: Water
Analysis Batch: 95291

Client Sample ID: Lab Control Sample Dup
Prep Type: Total/NA

Analyte	Spike Added	LCSD Result	LCSD Qualifier	Unit	D	%Rec	%Rec. Limits	RPD	RPD Limit
1,1-Dichloroethene	25.0	22.6		ug/L		90	70 - 130	4	20
1,1-Dichloropropene	25.0	22.1		ug/L		88	70 - 130	6	20
1,2,3-Trichlorobenzene	25.0	23.8		ug/L		95	70 - 130	5	20
1,2,3-Trichloropropane	25.0	25.8		ug/L		103	70 - 130	2	20
1,2,4-Trichlorobenzene	25.0	24.7		ug/L		99	70 - 130	1	20
1,2,4-Trimethylbenzene	25.0	24.9		ug/L		99	70 - 130	3	20
1,2-Dibromo-3-Chloropropane	25.0	25.9		ug/L		103	70 - 130	1	20
1,2-Dichlorobenzene	25.0	24.2		ug/L		97	70 - 130	1	20
1,2-Dichloroethane	25.0	24.8		ug/L		99	70 - 130	2	20
1,2-Dichloropropane	25.0	22.3		ug/L		89	70 - 130	3	20
1,3,5-Trimethylbenzene	25.0	25.1		ug/L		101	70 - 130	4	20
1,3-Dichlorobenzene	25.0	24.9		ug/L		100	70 - 130	0	20
1,3-Dichloropropane	25.0	23.1		ug/L		93	70 - 130	1	20
1,4-Dichlorobenzene	25.0	24.8		ug/L		99	70 - 130	2	20
1,4-Dioxane	1000	966		ug/L		97	70 - 130	20	20
2,2-Dichloropropane	25.0	22.1		ug/L		89	70 - 130	7	20
2-Butanone (MEK)	125	155		ug/L		124	70 - 130	4	20
2-Chlorotoluene	25.0	24.4		ug/L		98	70 - 130	2	20
2-Hexanone	125	124		ug/L		99	70 - 130	2	20
4-Chlorotoluene	25.0	23.5		ug/L		94	70 - 130	3	20
4-Isopropyltoluene	25.0	25.6		ug/L		102	70 - 130	4	20
4-Methyl-2-pentanone (MIBK)	125	120		ug/L		96	70 - 130	1	20
Acetone	125	122		ug/L		97	70 - 130	14	20
Benzene	25.0	21.9		ug/L		88	70 - 130	7	20
Bromobenzene	25.0	24.8		ug/L		99	70 - 130	1	20
Bromoform	25.0	22.3		ug/L		89	70 - 130	6	20
Bromomethane	25.0	22.3		ug/L		89	70 - 130	4	20
Carbon disulfide	25.0	19.6		ug/L		78	70 - 130	8	20
Carbon tetrachloride	25.0	24.9		ug/L		100	70 - 130	5	20
Chlorobenzene	25.0	23.5		ug/L		94	70 - 130	4	20
Chlorobromomethane	25.0	22.7		ug/L		91	70 - 130	2	20
Chlorodibromomethane	25.0	22.8		ug/L		91	70 - 130	2	20
Chloroethane	25.0	18.5		ug/L		74	70 - 130	11	20
Chloroform	25.0	23.4		ug/L		94	70 - 130	4	20
Chloromethane	25.0	20.5		ug/L		82	70 - 130	4	20
cis-1,2-Dichloroethene	25.0	22.6		ug/L		90	70 - 130	4	20
cis-1,3-Dichloropropene	25.0	23.3		ug/L		93	70 - 130	1	20
Dichlorobromomethane	25.0	23.8		ug/L		95	70 - 130	4	20
Dichlorodifluoromethane	50.0	35.9		ug/L		72	70 - 130	8	20
Ethyl ether	25.0	19.7		ug/L		79	70 - 130	6	20
Ethylbenzene	25.0	24.4		ug/L		97	70 - 130	2	20
Ethylene Dibromide	25.0	25.5		ug/L		102	70 - 130	2	20
Hexachlorobutadiene	25.0	27.4		ug/L		110	70 - 130	5	20
Isopropyl ether	25.0	21.9		ug/L		88	70 - 130	1	20
Isopropylbenzene	25.0	24.8		ug/L		99	70 - 130	3	20
Methyl tert-butyl ether	25.0	21.8		ug/L		87	70 - 130	2	20
Methylene Chloride	25.0	21.4		ug/L		86	70 - 130	5	20
m-Xylene & p-Xylene	50.0	49.7		ug/L		99	70 - 130	3	20

Method: 8260C - Volatile Organic Compounds (GC/MS) (Continued)

Lab Sample ID: LCSD 480-95291/5
Matrix: Water
Analysis Batch: 95291

Client Sample ID: Lab Control Sample Dup
Prep Type: Total/NA

Analyte	Spike Added	LCSD Result	LCSD Qualifier	Unit	D	%Rec	%Rec. Limits	RPD	RPD Limit
Naphthalene	25.0	23.7		ug/L		95	70 - 130	2	20
n-Butylbenzene	25.0	25.9		ug/L		104	70 - 130	2	20
N-Propylbenzene	25.0	25.1		ug/L		100	70 - 130	4	20
o-Xylene	25.0	23.2		ug/L		93	70 - 130	3	20
sec-Butylbenzene	25.0	25.0		ug/L		100	70 - 130	2	20
Styrene	25.0	23.6		ug/L		95	70 - 130	3	20
Tert-amyl methyl ether	25.0	19.5		ug/L		78	70 - 130	5	20
Tert-butyl ethyl ether	25.0	20.6		ug/L		82	70 - 130	0	20
tert-Butylbenzene	25.0	25.6		ug/L		102	70 - 130	2	20
Tetrachloroethene	25.0	26.0		ug/L		104	70 - 130	2	20
Tetrahydrofuran	125	114		ug/L		91	70 - 130	1	20
Toluene	25.0	23.9		ug/L		95	70 - 130	2	20
trans-1,2-Dichloroethene	25.0	23.0		ug/L		92	70 - 130	4	20
trans-1,3-Dichloropropene	25.0	21.4		ug/L		86	70 - 130	2	20
Trichloroethene	25.0	24.7		ug/L		99	70 - 130	4	20
Trichlorofluoromethane	25.0	23.0		ug/L		92	70 - 130	8	20
Vinyl chloride	25.0	20.1		ug/L		80	70 - 130	6	20
Dibromomethane	25.0	24.2		ug/L		97	70 - 130	0	20

Surrogate	*LCSD %Recovery*	*LCSD Qualifier*	*Limits*
Toluene-d8 (Surr)	*115*		*70 - 130*
1,2-Dichloroethane-d4 (Surr)	*107*		*70 - 130*
4-Bromofluorobenzene (Surr)	*109*		*70 - 130*

Lab Sample ID: MB 480-95390/7
Matrix: Water
Analysis Batch: 95390

Client Sample ID: Method Blank
Prep Type: Total/NA

Analyte	MB Result	MB Qualifier	RL	MDL	Unit	D	Prepared	Analyzed	Dil Fac
1,1,1,2-Tetrachloroethane	ND		1.0		ug/L			12/12/12 13:30	1
1,1,1-Trichloroethane	ND		1.0		ug/L			12/12/12 13:30	1
1,1,2,2-Tetrachloroethane	ND		0.50		ug/L			12/12/12 13:30	1
1,1,2-Trichloroethane	ND		1.0		ug/L			12/12/12 13:30	1
1,1-Dichloroethane	ND		1.0		ug/L			12/12/12 13:30	1
1,1-Dichloroethene	ND		1.0		ug/L			12/12/12 13:30	1
1,1-Dichloropropene	ND		1.0		ug/L			12/12/12 13:30	1
1,2,3-Trichlorobenzene	ND		1.0		ug/L			12/12/12 13:30	1
1,2,3-Trichloropropane	ND		1.0		ug/L			12/12/12 13:30	1
1,2,4-Trichlorobenzene	ND		1.0		ug/L			12/12/12 13:30	1
1,2,4-Trimethylbenzene	ND		1.0		ug/L			12/12/12 13:30	1
1,2-Dibromo-3-Chloropropane	ND		5.0		ug/L			12/12/12 13:30	1
1,2-Dichlorobenzene	ND		1.0		ug/L			12/12/12 13:30	1
1,2-Dichloroethane	ND		1.0		ug/L			12/12/12 13:30	1
1,2-Dichloropropane	ND		1.0		ug/L			12/12/12 13:30	1
1,3,5-Trimethylbenzene	ND		1.0		ug/L			12/12/12 13:30	1
1,3-Dichlorobenzene	ND		1.0		ug/L			12/12/12 13:30	1
1,3-Dichloropropane	ND		1.0		ug/L			12/12/12 13:30	1
1,4-Dichlorobenzene	ND		1.0		ug/L			12/12/12 13:30	1

Method: 8260C - Volatile Organic Compounds (GC/MS) (Continued)

Lab Sample ID: MB 480-95390/7
Matrix: Water
Analysis Batch: 95390

Client Sample ID: Method Blank
Prep Type: Total/NA

Analyte	MB Result	MB Qualifier	RL	MDL	Unit	D	Prepared	Analyzed	Dil Fac
1,4-Dioxane	ND		50		ug/L			12/12/12 13:30	1
2,2-Dichloropropane	ND		1.0		ug/L			12/12/12 13:30	1
2-Butanone (MEK)	ND		10		ug/L			12/12/12 13:30	1
2-Chlorotoluene	ND		1.0		ug/L			12/12/12 13:30	1
2-Hexanone	ND		10		ug/L			12/12/12 13:30	1
4-Chlorotoluene	ND		1.0		ug/L			12/12/12 13:30	1
4-Isopropyltoluene	ND		1.0		ug/L			12/12/12 13:30	1
4-Methyl-2-pentanone (MIBK)	ND		10		ug/L			12/12/12 13:30	1
Acetone	ND		50		ug/L			12/12/12 13:30	1
Benzene	ND		1.0		ug/L			12/12/12 13:30	1
Bromobenzene	ND		1.0		ug/L			12/12/12 13:30	1
Bromoform	ND		1.0		ug/L			12/12/12 13:30	1
Bromomethane	ND		2.0		ug/L			12/12/12 13:30	1
Carbon disulfide	ND		10		ug/L			12/12/12 13:30	1
Carbon tetrachloride	ND		1.0		ug/L			12/12/12 13:30	1
Chlorobenzene	ND		1.0		ug/L			12/12/12 13:30	1
Chlorobromomethane	ND		1.0		ug/L			12/12/12 13:30	1
Chlorodibromomethane	ND		0.50		ug/L			12/12/12 13:30	1
Chloroethane	ND		2.0		ug/L			12/12/12 13:30	1
Chloroform	ND		1.0		ug/L			12/12/12 13:30	1
Chloromethane	ND		2.0		ug/L			12/12/12 13:30	1
cis-1,2-Dichloroethene	ND		1.0		ug/L			12/12/12 13:30	1
cis-1,3-Dichloropropene	ND		0.40		ug/L			12/12/12 13:30	1
Dichlorobromomethane	ND		0.50		ug/L			12/12/12 13:30	1
Dichlorodifluoromethane	ND		1.0		ug/L			12/12/12 13:30	1
Ethyl ether	ND		1.0		ug/L			12/12/12 13:30	1
Ethylbenzene	ND		1.0		ug/L			12/12/12 13:30	1
Ethylene Dibromide	ND		1.0		ug/L			12/12/12 13:30	1
Hexachlorobutadiene	ND		0.40		ug/L			12/12/12 13:30	1
Isopropyl ether	ND		10		ug/L			12/12/12 13:30	1
Isopropylbenzene	ND		1.0		ug/L			12/12/12 13:30	1
Methyl tert-butyl ether	ND		1.0		ug/L			12/12/12 13:30	1
Methylene Chloride	ND		1.0		ug/L			12/12/12 13:30	1
m-Xylene & p-Xylene	ND		2.0		ug/L			12/12/12 13:30	1
Naphthalene	ND		5.0		ug/L			12/12/12 13:30	1
n-Butylbenzene	ND		1.0		ug/L			12/12/12 13:30	1
N-Propylbenzene	ND		1.0		ug/L			12/12/12 13:30	1
o-Xylene	ND		1.0		ug/L			12/12/12 13:30	1
sec-Butylbenzene	ND		1.0		ug/L			12/12/12 13:30	1
Styrene	ND		1.0		ug/L			12/12/12 13:30	1
Tert-amyl methyl ether	ND		5.0		ug/L			12/12/12 13:30	1
Tert-butyl ethyl ether	ND		5.0		ug/L			12/12/12 13:30	1
tert-Butylbenzene	ND		1.0		ug/L			12/12/12 13:30	1
Tetrachloroethene	ND		1.0		ug/L			12/12/12 13:30	1
Tetrahydrofuran	ND		10		ug/L			12/12/12 13:30	1
Toluene	ND		1.0		ug/L			12/12/12 13:30	1
trans-1,2-Dichloroethene	ND		1.0		ug/L			12/12/12 13:30	1
trans-1,3-Dichloropropene	ND		0.40		ug/L			12/12/12 13:30	1

Method: 8260C - Volatile Organic Compounds (GC/MS) (Continued)

Lab Sample ID: MB 480-95390/7
Matrix: Water
Analysis Batch: 95390

Client Sample ID: Method Blank
Prep Type: Total/NA

Analyte	MB Result	MB Qualifier	RL	MDL	Unit	D	Prepared	Analyzed	Dil Fac
Trichloroethene	ND		1.0		ug/L			12/12/12 13:30	1
Trichlorofluoromethane	ND		1.0		ug/L			12/12/12 13:30	1
Vinyl chloride	ND		0.50		ug/L			12/12/12 13:30	1
Dibromomethane	ND		1.0		ug/L			12/12/12 13:30	1

Surrogate	*MB %Recovery*	*MB Qualifier*	*Limits*	*Prepared*	*Analyzed*	*Dil Fac*
Toluene-d8 (Surr)	*113*		*70 - 130*		*12/12/12 13:30*	*1*
1,2-Dichloroethane-d4 (Surr)	*112*		*70 - 130*		*12/12/12 13:30*	*1*
4-Bromofluorobenzene (Surr)	*107*		*70 - 130*		*12/12/12 13:30*	*1*

Lab Sample ID: LCS 480-95390/4
Matrix: Water
Analysis Batch: 95390

Client Sample ID: Lab Control Sample
Prep Type: Total/NA

Analyte	Spike Added	LCS Result	LCS Qualifier	Unit	D	%Rec	%Rec. Limits
1,1,1,2-Tetrachloroethane	25.0	24.1		ug/L		96	70 - 130
1,1,1-Trichloroethane	25.0	24.9		ug/L		100	70 - 130
1,1,2,2-Tetrachloroethane	25.0	25.4		ug/L		102	70 - 130
1,1,2-Trichloroethane	25.0	24.1		ug/L		96	70 - 130
1,1-Dichloroethane	25.0	22.8		ug/L		91	70 - 130
1,1-Dichloroethene	25.0	22.1		ug/L		88	70 - 130
1,1-Dichloropropene	25.0	22.8		ug/L		91	70 - 130
1,2,3-Trichlorobenzene	25.0	24.6		ug/L		98	70 - 130
1,2,3-Trichloropropane	25.0	27.3		ug/L		109	70 - 130
1,2,4-Trichlorobenzene	25.0	25.5		ug/L		102	70 - 130
1,2,4-Trimethylbenzene	25.0	25.6		ug/L		103	70 - 130
1,2-Dibromo-3-Chloropropane	25.0	29.2		ug/L		117	70 - 130
1,2-Dichlorobenzene	25.0	25.4		ug/L		102	70 - 130
1,2-Dichloroethane	25.0	24.9		ug/L		99	70 - 130
1,2-Dichloropropane	25.0	22.8		ug/L		91	70 - 130
1,3,5-Trimethylbenzene	25.0	25.6		ug/L		102	70 - 130
1,3-Dichlorobenzene	25.0	25.6		ug/L		103	70 - 130
1,3-Dichloropropane	25.0	23.2		ug/L		93	70 - 130
1,4-Dichlorobenzene	25.0	25.5		ug/L		102	70 - 130
1,4-Dioxane	1000	923		ug/L		92	70 - 130
2,2-Dichloropropane	25.0	22.9		ug/L		92	70 - 130
2-Butanone (MEK)	125	168	*	ug/L		134	70 - 130
2-Chlorotoluene	25.0	24.6		ug/L		99	70 - 130
2-Hexanone	125	127		ug/L		102	70 - 130
4-Chlorotoluene	25.0	23.7		ug/L		95	70 - 130
4-Isopropyltoluene	25.0	25.9		ug/L		104	70 - 130
4-Methyl-2-pentanone (MIBK)	125	122		ug/L		98	70 - 130
Acetone	125	102		ug/L		82	70 - 130
Benzene	25.0	22.9		ug/L		91	70 - 130
Bromobenzene	25.0	25.0		ug/L		100	70 - 130
Bromoform	25.0	23.2		ug/L		93	70 - 130
Bromomethane	25.0	24.7		ug/L		99	70 - 130
Carbon disulfide	25.0	19.9		ug/L		80	70 - 130

Method: 8260C - Volatile Organic Compounds (GC/MS) (Continued)

Lab Sample ID: LCS 480-95390/4
Matrix: Water
Analysis Batch: 95390

Client Sample ID: Lab Control Sample
Prep Type: Total/NA

Analyte	Spike Added	LCS Result	LCS Qualifier	Unit	D	%Rec	%Rec. Limits
Carbon tetrachloride	25.0	24.1		ug/L		97	70 - 130
Chlorobenzene	25.0	24.0		ug/L		96	70 - 130
Chlorobromomethane	25.0	23.4		ug/L		94	70 - 130
Chlorodibromomethane	25.0	23.0		ug/L		92	70 - 130
Chloroethane	25.0	21.0		ug/L		84	70 - 130
Chloroform	25.0	24.0		ug/L		96	70 - 130
Chloromethane	25.0	23.0		ug/L		92	70 - 130
cis-1,2-Dichloroethene	25.0	22.5		ug/L		90	70 - 130
cis-1,3-Dichloropropene	25.0	23.1		ug/L		92	70 - 130
Dichlorobromomethane	25.0	24.7		ug/L		99	70 - 130
Dichlorodifluoromethane	50.0	50.6		ug/L		101	70 - 130
Ethyl ether	25.0	19.8		ug/L		79	70 - 130
Ethylbenzene	25.0	25.0		ug/L		100	70 - 130
Ethylene Dibromide	25.0	24.7		ug/L		99	70 - 130
Hexachlorobutadiene	25.0	26.2		ug/L		105	70 - 130
Isopropyl ether	25.0	21.1		ug/L		85	70 - 130
Isopropylbenzene	25.0	25.1		ug/L		100	70 - 130
Methyl tert-butyl ether	25.0	20.8		ug/L		83	70 - 130
Methylene Chloride	25.0	21.4		ug/L		86	70 - 130
m-Xylene & p-Xylene	50.0	50.1		ug/L		100	70 - 130
Naphthalene	25.0	25.6		ug/L		102	70 - 130
n-Butylbenzene	25.0	26.8		ug/L		107	70 - 130
N-Propylbenzene	25.0	25.0		ug/L		100	70 - 130
o-Xylene	25.0	23.8		ug/L		95	70 - 130
sec-Butylbenzene	25.0	25.5		ug/L		102	70 - 130
Styrene	25.0	24.7		ug/L		99	70 - 130
Tert-amyl methyl ether	25.0	20.9		ug/L		84	70 - 130
Tert-butyl ethyl ether	25.0	20.1		ug/L		80	70 - 130
tert-Butylbenzene	25.0	25.9		ug/L		103	70 - 130
Tetrachloroethene	25.0	26.5		ug/L		106	70 - 130
Tetrahydrofuran	125	117		ug/L		93	70 - 130
Toluene	25.0	24.0		ug/L		96	70 - 130
trans-1,2-Dichloroethene	25.0	22.8		ug/L		91	70 - 130
trans-1,3-Dichloropropene	25.0	21.0		ug/L		84	70 - 130
Trichloroethene	25.0	24.1		ug/L		96	70 - 130
Trichlorofluoromethane	25.0	20.3		ug/L		81	70 - 130
Vinyl chloride	25.0	21.3		ug/L		85	70 - 130
Dibromomethane	25.0	24.0		ug/L		96	70 - 130

Surrogate	*LCS %Recovery*	*LCS Qualifier*	*Limits*
Toluene-d8 (Surr)	*115*		*70 - 130*
1,2-Dichloroethane-d4 (Surr)	*105*		*70 - 130*
4-Bromofluorobenzene (Surr)	*112*		*70 - 130*

Method: 8260C - Volatile Organic Compounds (GC/MS) (Continued)

Lab Sample ID: LCSD 480-95390/5
Matrix: Water
Analysis Batch: 95390

Client Sample ID: Lab Control Sample Dup
Prep Type: Total/NA

Analyte	Spike Added	LCSD Result	LCSD Qualifier	Unit	D	%Rec	%Rec. Limits	RPD	RPD Limit
1,1,1,2-Tetrachloroethane	25.0	24.1		ug/L		97	70 - 130	0	20
1,1,1-Trichloroethane	25.0	23.6		ug/L		95	70 - 130	5	20
1,1,2,2-Tetrachloroethane	25.0	25.0		ug/L		100	70 - 130	2	20
1,1,2-Trichloroethane	25.0	23.3		ug/L		93	70 - 130	3	20
1,1-Dichloroethane	25.0	21.7		ug/L		87	70 - 130	5	20
1,1-Dichloroethene	25.0	21.8		ug/L		87	70 - 130	1	20
1,1-Dichloropropene	25.0	21.5		ug/L		86	70 - 130	6	20
1,2,3-Trichlorobenzene	25.0	23.9		ug/L		95	70 - 130	3	20
1,2,3-Trichloropropane	25.0	26.3		ug/L		105	70 - 130	4	20
1,2,4-Trichlorobenzene	25.0	25.2		ug/L		101	70 - 130	1	20
1,2,4-Trimethylbenzene	25.0	24.9		ug/L		100	70 - 130	3	20
1,2-Dibromo-3-Chloropropane	25.0	28.8		ug/L		115	70 - 130	1	20
1,2-Dichlorobenzene	25.0	25.1		ug/L		100	70 - 130	1	20
1,2-Dichloroethane	25.0	24.6		ug/L		99	70 - 130	1	20
1,2-Dichloropropane	25.0	21.6		ug/L		86	70 - 130	5	20
1,3,5-Trimethylbenzene	25.0	25.4		ug/L		101	70 - 130	1	20
1,3-Dichlorobenzene	25.0	24.9		ug/L		100	70 - 130	3	20
1,3-Dichloropropane	25.0	22.6		ug/L		91	70 - 130	2	20
1,4-Dichlorobenzene	25.0	24.3		ug/L		97	70 - 130	5	20
1,4-Dioxane	1000	1120		ug/L		112	70 - 130	20	20
2,2-Dichloropropane	25.0	21.9		ug/L		88	70 - 130	5	20
2-Butanone (MEK)	125	169	*	ug/L		135	70 - 130	1	20
2-Chlorotoluene	25.0	24.5		ug/L		98	70 - 130	1	20
2-Hexanone	125	127		ug/L		102	70 - 130	0	20
4-Chlorotoluene	25.0	23.4		ug/L		93	70 - 130	1	20
4-Isopropyltoluene	25.0	25.8		ug/L		103	70 - 130	1	20
4-Methyl-2-pentanone (MIBK)	125	123		ug/L		98	70 - 130	0	20
Acetone	125	137	*	ug/L		109	70 - 130	29	20
Benzene	25.0	21.2		ug/L		85	70 - 130	8	20
Bromobenzene	25.0	23.6		ug/L		94	70 - 130	6	20
Bromoform	25.0	22.7		ug/L		91	70 - 130	2	20
Bromomethane	25.0	23.7		ug/L		95	70 - 130	4	20
Carbon disulfide	25.0	19.1		ug/L		76	70 - 130	4	20
Carbon tetrachloride	25.0	21.8		ug/L		87	70 - 130	10	20
Chlorobenzene	25.0	23.9		ug/L		96	70 - 130	0	20
Chlorobromomethane	25.0	22.3		ug/L		89	70 - 130	5	20
Chlorodibromomethane	25.0	22.0		ug/L		88	70 - 130	4	20
Chloroethane	25.0	19.1		ug/L		76	70 - 130	10	20
Chloroform	25.0	23.1		ug/L		92	70 - 130	4	20
Chloromethane	25.0	23.1		ug/L		92	70 - 130	0	20
cis-1,2-Dichloroethene	25.0	22.7		ug/L		91	70 - 130	1	20
cis-1,3-Dichloropropene	25.0	22.1		ug/L		88	70 - 130	4	20
Dichlorobromomethane	25.0	23.6		ug/L		94	70 - 130	5	20
Dichlorodifluoromethane	50.0	48.5		ug/L		97	70 - 130	4	20
Ethyl ether	25.0	20.2		ug/L		81	70 - 130	2	20
Ethylbenzene	25.0	23.7		ug/L		95	70 - 130	5	20
Ethylene Dibromide	25.0	24.4		ug/L		98	70 - 130	1	20
Hexachlorobutadiene	25.0	28.0		ug/L		112	70 - 130	7	20

Method: 8260C - Volatile Organic Compounds (GC/MS) (Continued)

Lab Sample ID: LCSD 480-95390/5
Matrix: Water
Analysis Batch: 95390

Client Sample ID: Lab Control Sample Dup
Prep Type: Total/NA

Analyte	Spike Added	LCSD Result	LCSD Qualifier	Unit	D	%Rec	%Rec. Limits	RPD	RPD Limit
Isopropyl ether	25.0	21.1		ug/L		84	70 - 130	0	20
Isopropylbenzene	25.0	24.0		ug/L		96	70 - 130	4	20
Methyl tert-butyl ether	25.0	21.1		ug/L		84	70 - 130	1	20
Methylene Chloride	25.0	20.7		ug/L		83	70 - 130	4	20
m-Xylene & p-Xylene	50.0	47.5		ug/L		95	70 - 130	5	20
Naphthalene	25.0	24.7		ug/L		99	70 - 130	4	20
n-Butylbenzene	25.0	25.9		ug/L		103	70 - 130	4	20
N-Propylbenzene	25.0	24.2		ug/L		97	70 - 130	4	20
o-Xylene	25.0	23.0		ug/L		92	70 - 130	3	20
sec-Butylbenzene	25.0	24.9		ug/L		99	70 - 130	2	20
Styrene	25.0	23.7		ug/L		95	70 - 130	4	20
Tert-amyl methyl ether	25.0	20.3		ug/L		81	70 - 130	3	20
Tert-butyl ethyl ether	25.0	20.4		ug/L		82	70 - 130	2	20
tert-Butylbenzene	25.0	25.8		ug/L		103	70 - 130	0	20
Tetrachloroethene	25.0	25.0		ug/L		100	70 - 130	6	20
Tetrahydrofuran	125	121		ug/L		97	70 - 130	3	20
Toluene	25.0	22.7		ug/L		91	70 - 130	5	20
trans-1,2-Dichloroethene	25.0	22.3		ug/L		89	70 - 130	2	20
trans-1,3-Dichloropropene	25.0	20.4		ug/L		82	70 - 130	3	20
Trichloroethene	25.0	23.9		ug/L		95	70 - 130	1	20
Trichlorofluoromethane	25.0	18.2		ug/L		73	70 - 130	11	20
Vinyl chloride	25.0	20.0		ug/L		80	70 - 130	6	20
Dibromomethane	25.0	23.7		ug/L		95	70 - 130	1	20

Surrogate	*LCSD %Recovery*	*LCSD Qualifier*	*Limits*
Toluene-d8 (Surr)	*113*		*70 - 130*
1,2-Dichloroethane-d4 (Surr)	*103*		*70 - 130*
4-Bromofluorobenzene (Surr)	*107*		*70 - 130*

Lab Sample ID: MB 480-95590/7
Matrix: Water
Analysis Batch: 95590

Client Sample ID: Method Blank
Prep Type: Total/NA

Analyte	MB Result	MB Qualifier	RL	MDL	Unit	D	Prepared	Analyzed	Dil Fac
1,1,1,2-Tetrachloroethane	ND		1.0		ug/L			12/13/12 12:42	1
1,1,1-Trichloroethane	ND		1.0		ug/L			12/13/12 12:42	1
1,1,2,2-Tetrachloroethane	ND		0.50		ug/L			12/13/12 12:42	1
1,1,2-Trichloroethane	ND		1.0		ug/L			12/13/12 12:42	1
1,1-Dichloroethane	ND		1.0		ug/L			12/13/12 12:42	1
1,1-Dichloroethene	ND		1.0		ug/L			12/13/12 12:42	1
1,1-Dichloropropene	ND		1.0		ug/L			12/13/12 12:42	1
1,2,3-Trichlorobenzene	ND		1.0		ug/L			12/13/12 12:42	1
1,2,3-Trichloropropane	ND		1.0		ug/L			12/13/12 12:42	1
1,2,4-Trichlorobenzene	ND		1.0		ug/L			12/13/12 12:42	1
1,2,4-Trimethylbenzene	ND		1.0		ug/L			12/13/12 12:42	1
1,2-Dibromo-3-Chloropropane	ND		5.0		ug/L			12/13/12 12:42	1
1,2-Dichlorobenzene	ND		1.0		ug/L			12/13/12 12:42	1
1,2-Dichloroethane	ND		1.0		ug/L			12/13/12 12:42	1

Method: 8260C - Volatile Organic Compounds (GC/MS) (Continued)

Lab Sample ID: MB 480-95590/7
Matrix: Water
Analysis Batch: 95590

Client Sample ID: Method Blank
Prep Type: Total/NA

Analyte	MB Result	MB Qualifier	RL	MDL	Unit	D	Prepared	Analyzed	Dil Fac
1,2-Dichloropropane	ND		1.0		ug/L			12/13/12 12:42	1
1,3,5-Trimethylbenzene	ND		1.0		ug/L			12/13/12 12:42	1
1,3-Dichlorobenzene	ND		1.0		ug/L			12/13/12 12:42	1
1,3-Dichloropropane	ND		1.0		ug/L			12/13/12 12:42	1
1,4-Dichlorobenzene	ND		1.0		ug/L			12/13/12 12:42	1
1,4-Dioxane	ND		50		ug/L			12/13/12 12:42	1
2,2-Dichloropropane	ND		1.0		ug/L			12/13/12 12:42	1
2-Butanone (MEK)	ND		10		ug/L			12/13/12 12:42	1
2-Chlorotoluene	ND		1.0		ug/L			12/13/12 12:42	1
2-Hexanone	ND		10		ug/L			12/13/12 12:42	1
4-Chlorotoluene	ND		1.0		ug/L			12/13/12 12:42	1
4-Isopropyltoluene	ND		1.0		ug/L			12/13/12 12:42	1
4-Methyl-2-pentanone (MIBK)	ND		10		ug/L			12/13/12 12:42	1
Acetone	ND		50		ug/L			12/13/12 12:42	1
Benzene	ND		1.0		ug/L			12/13/12 12:42	1
Bromobenzene	ND		1.0		ug/L			12/13/12 12:42	1
Bromoform	ND		1.0		ug/L			12/13/12 12:42	1
Bromomethane	ND		2.0		ug/L			12/13/12 12:42	1
Carbon disulfide	ND		10		ug/L			12/13/12 12:42	1
Carbon tetrachloride	ND		1.0		ug/L			12/13/12 12:42	1
Chlorobenzene	ND		1.0		ug/L			12/13/12 12:42	1
Chlorobromomethane	ND		1.0		ug/L			12/13/12 12:42	1
Chlorodibromomethane	ND		0.50		ug/L			12/13/12 12:42	1
Chloroethane	ND		2.0		ug/L			12/13/12 12:42	1
Chloroform	ND		1.0		ug/L			12/13/12 12:42	1
Chloromethane	ND		2.0		ug/L			12/13/12 12:42	1
cis-1,2-Dichloroethene	ND		1.0		ug/L			12/13/12 12:42	1
cis-1,3-Dichloropropene	ND		0.40		ug/L			12/13/12 12:42	1
Dichlorobromomethane	ND		0.50		ug/L			12/13/12 12:42	1
Dichlorodifluoromethane	ND		1.0		ug/L			12/13/12 12:42	1
Ethyl ether	ND		1.0		ug/L			12/13/12 12:42	1
Ethylbenzene	ND		1.0		ug/L			12/13/12 12:42	1
Ethylene Dibromide	ND		1.0		ug/L			12/13/12 12:42	1
Hexachlorobutadiene	ND		0.40		ug/L			12/13/12 12:42	1
Isopropyl ether	ND		10		ug/L			12/13/12 12:42	1
Isopropylbenzene	ND		1.0		ug/L			12/13/12 12:42	1
Methyl tert-butyl ether	ND		1.0		ug/L			12/13/12 12:42	1
Methylene Chloride	ND		1.0		ug/L			12/13/12 12:42	1
m-Xylene & p-Xylene	ND		2.0		ug/L			12/13/12 12:42	1
Naphthalene	ND		5.0		ug/L			12/13/12 12:42	1
n-Butylbenzene	ND		1.0		ug/L			12/13/12 12:42	1
N-Propylbenzene	ND		1.0		ug/L			12/13/12 12:42	1
o-Xylene	ND		1.0		ug/L			12/13/12 12:42	1
sec-Butylbenzene	ND		1.0		ug/L			12/13/12 12:42	1
Styrene	ND		1.0		ug/L			12/13/12 12:42	1
Tert-amyl methyl ether	ND		5.0		ug/L			12/13/12 12:42	1
Tert-butyl ethyl ether	ND		5.0		ug/L			12/13/12 12:42	1
tert-Butylbenzene	ND		1.0		ug/L			12/13/12 12:42	1

Method: 8260C - Volatile Organic Compounds (GC/MS) (Continued)

Lab Sample ID: MB 480-95590/7
Matrix: Water
Analysis Batch: 95590

Client Sample ID: Method Blank
Prep Type: Total/NA

Analyte	MB Result	MB Qualifier	RL	MDL	Unit	D	Prepared	Analyzed	Dil Fac
Tetrachloroethene	ND		1.0		ug/L			12/13/12 12:42	1
Tetrahydrofuran	ND		10		ug/L			12/13/12 12:42	1
Toluene	ND		1.0		ug/L			12/13/12 12:42	1
trans-1,2-Dichloroethene	ND		1.0		ug/L			12/13/12 12:42	1
trans-1,3-Dichloropropene	ND		0.40		ug/L			12/13/12 12:42	1
Trichloroethene	ND		1.0		ug/L			12/13/12 12:42	1
Trichlorofluoromethane	ND		1.0		ug/L			12/13/12 12:42	1
Vinyl chloride	ND		0.50		ug/L			12/13/12 12:42	1
Dibromomethane	ND		1.0		ug/L			12/13/12 12:42	1

Surrogate	*MB %Recovery*	*MB Qualifier*	*Limits*	*Prepared*	*Analyzed*	*Dil Fac*
Toluene-d8 (Surr)	*120*		*70 - 130*		*12/13/12 12:42*	*1*
1,2-Dichloroethane-d4 (Surr)	*119*		*70 - 130*		*12/13/12 12:42*	*1*
4-Bromofluorobenzene (Surr)	*117*		*70 - 130*		*12/13/12 12:42*	*1*

Lab Sample ID: LCS 480-95590/4
Matrix: Water
Analysis Batch: 95590

Client Sample ID: Lab Control Sample
Prep Type: Total/NA

Analyte	Spike Added	LCS Result	LCS Qualifier	Unit	D	%Rec	%Rec. Limits
1,1,1,2-Tetrachloroethane	25.0	26.6		ug/L		106	70 - 130
1,1,1-Trichloroethane	25.0	28.4		ug/L		113	70 - 130
1,1,2,2-Tetrachloroethane	25.0	26.6		ug/L		106	70 - 130
1,1,2-Trichloroethane	25.0	24.9		ug/L		100	70 - 130
1,1-Dichloroethane	25.0	25.4		ug/L		102	70 - 130
1,1-Dichloroethene	25.0	28.0		ug/L		112	70 - 130
1,1-Dichloropropene	25.0	26.4		ug/L		106	70 - 130
1,2,3-Trichlorobenzene	25.0	26.3		ug/L		105	70 - 130
1,2,3-Trichloropropane	25.0	27.8		ug/L		111	70 - 130
1,2,4-Trichlorobenzene	25.0	27.7		ug/L		111	70 - 130
1,2,4-Trimethylbenzene	25.0	28.1		ug/L		113	70 - 130
1,2-Dibromo-3-Chloropropane	25.0	28.8		ug/L		115	70 - 130
1,2-Dichlorobenzene	25.0	28.0		ug/L		112	70 - 130
1,2-Dichloroethane	25.0	27.5		ug/L		110	70 - 130
1,2-Dichloropropane	25.0	23.8		ug/L		95	70 - 130
1,3,5-Trimethylbenzene	25.0	28.4		ug/L		114	70 - 130
1,3-Dichlorobenzene	25.0	27.9		ug/L		112	70 - 130
1,3-Dichloropropane	25.0	26.1		ug/L		104	70 - 130
1,4-Dichlorobenzene	25.0	27.6		ug/L		110	70 - 130
1,4-Dioxane	1000	961		ug/L		96	70 - 130
2,2-Dichloropropane	25.0	26.0		ug/L		104	70 - 130
2-Butanone (MEK)	125	176	*	ug/L		141	70 - 130
2-Chlorotoluene	25.0	27.2		ug/L		109	70 - 130
2-Hexanone	125	135		ug/L		108	70 - 130
4-Chlorotoluene	25.0	25.6		ug/L		102	70 - 130
4-Isopropyltoluene	25.0	29.2		ug/L		117	70 - 130
4-Methyl-2-pentanone (MIBK)	125	132		ug/L		106	70 - 130
Acetone	125	144		ug/L		115	70 - 130

Method: 8260C - Volatile Organic Compounds (GC/MS) (Continued)

Lab Sample ID: LCS 480-95590/4
Matrix: Water
Analysis Batch: 95590

Client Sample ID: Lab Control Sample
Prep Type: Total/NA

Analyte	Spike Added	LCS Result	LCS Qualifier	Unit	D	%Rec	%Rec. Limits
Benzene	25.0	24.4		ug/L		98	70 - 130
Bromobenzene	25.0	28.2		ug/L		113	70 - 130
Bromoform	25.0	24.4		ug/L		98	70 - 130
Bromomethane	25.0	26.8		ug/L		107	70 - 130
Carbon disulfide	25.0	25.3		ug/L		101	70 - 130
Carbon tetrachloride	25.0	30.2		ug/L		121	70 - 130
Chlorobenzene	25.0	26.6		ug/L		106	70 - 130
Chlorobromomethane	25.0	25.4		ug/L		102	70 - 130
Chlorodibromomethane	25.0	25.6		ug/L		102	70 - 130
Chloroethane	25.0	23.7		ug/L		95	70 - 130
Chloroform	25.0	26.6		ug/L		107	70 - 130
Chloromethane	25.0	25.6		ug/L		102	70 - 130
cis-1,2-Dichloroethene	25.0	25.1		ug/L		100	70 - 130
cis-1,3-Dichloropropene	25.0	26.7		ug/L		107	70 - 130
Dichlorobromomethane	25.0	27.5		ug/L		110	70 - 130
Dichlorodifluoromethane	50.0	62.2		ug/L		124	70 - 130
Ethyl ether	25.0	21.8		ug/L		87	70 - 130
Ethylbenzene	25.0	26.9		ug/L		108	70 - 130
Ethylene Dibromide	25.0	27.7		ug/L		111	70 - 130
Hexachlorobutadiene	25.0	29.6		ug/L		119	70 - 130
Isopropyl ether	25.0	23.7		ug/L		95	70 - 130
Isopropylbenzene	25.0	28.2		ug/L		113	70 - 130
Methyl tert-butyl ether	25.0	25.6		ug/L		103	70 - 130
Methylene Chloride	25.0	24.1		ug/L		96	70 - 130
m-Xylene & p-Xylene	50.0	53.7		ug/L		107	70 - 130
Naphthalene	25.0	24.2		ug/L		97	70 - 130
n-Butylbenzene	25.0	29.7		ug/L		119	70 - 130
N-Propylbenzene	25.0	28.3		ug/L		113	70 - 130
o-Xylene	25.0	26.2		ug/L		105	70 - 130
sec-Butylbenzene	25.0	29.2		ug/L		117	70 - 130
Styrene	25.0	26.2		ug/L		105	70 - 130
Tert-amyl methyl ether	25.0	24.0		ug/L		96	70 - 130
Tert-butyl ethyl ether	25.0	24.6		ug/L		98	70 - 130
tert-Butylbenzene	25.0	29.3		ug/L		117	70 - 130
Tetrachloroethene	25.0	29.6		ug/L		119	70 - 130
Tetrahydrofuran	125	131		ug/L		105	70 - 130
Toluene	25.0	25.8		ug/L		103	70 - 130
trans-1,2-Dichloroethene	25.0	25.6		ug/L		102	70 - 130
trans-1,3-Dichloropropene	25.0	23.6		ug/L		95	70 - 130
Trichloroethene	25.0	27.1		ug/L		108	70 - 130
Trichlorofluoromethane	25.0	28.8		ug/L		115	70 - 130
Vinyl chloride	25.0	25.8		ug/L		103	70 - 130
Dibromomethane	25.0	27.0		ug/L		108	70 - 130

Surrogate	*LCS %Recovery*	*LCS Qualifier*	*Limits*
Toluene-d8 (Surr)	*118*		*70 - 130*
1,2-Dichloroethane-d4 (Surr)	*116*		*70 - 130*
4-Bromofluorobenzene (Surr)	*120*		*70 - 130*

Method: 8260C - Volatile Organic Compounds (GC/MS) (Continued)

Lab Sample ID: LCSD 480-95590/5
Matrix: Water
Analysis Batch: 95590

Client Sample ID: Lab Control Sample Dup
Prep Type: Total/NA

Analyte	Spike Added	LCSD Result	LCSD Qualifier	Unit	D	%Rec	%Rec. Limits	RPD	RPD Limit
1,1,1,2-Tetrachloroethane	25.0	27.2		ug/L		109	70 - 130	2	20
1,1,1-Trichloroethane	25.0	29.9		ug/L		120	70 - 130	5	20
1,1,2,2-Tetrachloroethane	25.0	27.6		ug/L		110	70 - 130	4	20
1,1,2-Trichloroethane	25.0	25.5		ug/L		102	70 - 130	2	20
1,1-Dichloroethane	25.0	25.2		ug/L		101	70 - 130	1	20
1,1-Dichloroethene	25.0	28.1		ug/L		112	70 - 130	0	20
1,1-Dichloropropene	25.0	27.3		ug/L		109	70 - 130	3	20
1,2,3-Trichlorobenzene	25.0	28.0		ug/L		112	70 - 130	6	20
1,2,3-Trichloropropane	25.0	29.5		ug/L		118	70 - 130	6	20
1,2,4-Trichlorobenzene	25.0	29.3		ug/L		117	70 - 130	6	20
1,2,4-Trimethylbenzene	25.0	28.6		ug/L		114	70 - 130	2	20
1,2-Dibromo-3-Chloropropane	25.0	30.4		ug/L		122	70 - 130	6	20
1,2-Dichlorobenzene	25.0	28.6		ug/L		115	70 - 130	2	20
1,2-Dichloroethane	25.0	27.7		ug/L		111	70 - 130	1	20
1,2-Dichloropropane	25.0	25.3		ug/L		101	70 - 130	6	20
1,3,5-Trimethylbenzene	25.0	29.3		ug/L		117	70 - 130	3	20
1,3-Dichlorobenzene	25.0	28.6		ug/L		115	70 - 130	2	20
1,3-Dichloropropane	25.0	24.9		ug/L		99	70 - 130	5	20
1,4-Dichlorobenzene	25.0	28.7		ug/L		115	70 - 130	4	20
1,4-Dioxane	1000	770	*	ug/L		77	70 - 130	22	20
2,2-Dichloropropane	25.0	26.8		ug/L		107	70 - 130	3	20
2-Butanone (MEK)	125	171	*	ug/L		137	70 - 130	3	20
2-Chlorotoluene	25.0	29.4		ug/L		117	70 - 130	8	20
2-Hexanone	125	136		ug/L		109	70 - 130	1	20
4-Chlorotoluene	25.0	27.0		ug/L		108	70 - 130	5	20
4-Isopropyltoluene	25.0	30.0		ug/L		120	70 - 130	3	20
4-Methyl-2-pentanone (MIBK)	125	131		ug/L		105	70 - 130	1	20
Acetone	125	118		ug/L		95	70 - 130	20	20
Benzene	25.0	25.2		ug/L		101	70 - 130	3	20
Bromobenzene	25.0	29.1		ug/L		117	70 - 130	3	20
Bromoform	25.0	25.8		ug/L		103	70 - 130	6	20
Bromomethane	25.0	28.1		ug/L		112	70 - 130	5	20
Carbon disulfide	25.0	26.8		ug/L		107	70 - 130	6	20
Carbon tetrachloride	25.0	31.5		ug/L		126	70 - 130	4	20
Chlorobenzene	25.0	26.5		ug/L		106	70 - 130	0	20
Chlorobromomethane	25.0	24.7		ug/L		99	70 - 130	3	20
Chlorodibromomethane	25.0	25.4		ug/L		102	70 - 130	1	20
Chloroethane	25.0	23.9		ug/L		96	70 - 130	1	20
Chloroform	25.0	26.4		ug/L		106	70 - 130	1	20
Chloromethane	25.0	26.0		ug/L		104	70 - 130	2	20
cis-1,2-Dichloroethene	25.0	25.1		ug/L		100	70 - 130	0	20
cis-1,3-Dichloropropene	25.0	26.4		ug/L		105	70 - 130	1	20
Dichlorobromomethane	25.0	27.4		ug/L		110	70 - 130	0	20
Dichlorodifluoromethane	50.0	65.7	*	ug/L		131	70 - 130	6	20
Ethyl ether	25.0	21.9		ug/L		88	70 - 130	1	20
Ethylbenzene	25.0	27.0		ug/L		108	70 - 130	1	20
Ethylene Dibromide	25.0	26.7		ug/L		107	70 - 130	4	20
Hexachlorobutadiene	25.0	30.5		ug/L		122	70 - 130	3	20

Method: 8260C - Volatile Organic Compounds (GC/MS) (Continued)

Lab Sample ID: LCSD 480-95590/5
Matrix: Water
Analysis Batch: 95590

Client Sample ID: Lab Control Sample Dup
Prep Type: Total/NA

Analyte			Spike Added	LCSD Result	LCSD Qualifier	Unit	D	%Rec	%Rec. Limits	RPD	RPD Limit
Isopropyl ether			25.0	23.0		ug/L		92	70 - 130	3	20
Isopropylbenzene			25.0	29.5		ug/L		118	70 - 130	4	20
Methyl tert-butyl ether			25.0	26.2		ug/L		105	70 - 130	2	20
Methylene Chloride			25.0	24.1		ug/L		96	70 - 130	0	20
m-Xylene & p-Xylene			50.0	55.5		ug/L		111	70 - 130	3	20
Naphthalene			25.0	27.6		ug/L		110	70 - 130	13	20
n-Butylbenzene			25.0	31.0		ug/L		124	70 - 130	4	20
N-Propylbenzene			25.0	29.8		ug/L		119	70 - 130	5	20
o-Xylene			25.0	25.7		ug/L		103	70 - 130	2	20
sec-Butylbenzene			25.0	30.5		ug/L		122	70 - 130	4	20
Styrene			25.0	26.0		ug/L		104	70 - 130	1	20
Tert-amyl methyl ether			25.0	24.1		ug/L		96	70 - 130	0	20
Tert-butyl ethyl ether			25.0	24.2		ug/L		97	70 - 130	2	20
tert-Butylbenzene			25.0	30.9		ug/L		123	70 - 130	5	20
Tetrachloroethene			25.0	30.4		ug/L		122	70 - 130	3	20
Tetrahydrofuran			125	118		ug/L		94	70 - 130	11	20
Toluene			25.0	26.2		ug/L		105	70 - 130	1	20
trans-1,2-Dichloroethene			25.0	26.5		ug/L		106	70 - 130	3	20
trans-1,3-Dichloropropene			25.0	24.1		ug/L		96	70 - 130	2	20
Trichloroethene			25.0	27.9		ug/L		112	70 - 130	3	20
Trichlorofluoromethane			25.0	30.8		ug/L		123	70 - 130	7	20
Vinyl chloride			25.0	26.0		ug/L		104	70 - 130	1	20
Dibromomethane			25.0	27.3		ug/L		109	70 - 130	1	20

Surrogate	*LCSD %Recovery*	*LCSD Qualifier*	*Limits*
Toluene-d8 (Surr)	*117*		*70 - 130*
1,2-Dichloroethane-d4 (Surr)	*113*		*70 - 130*
4-Bromofluorobenzene (Surr)	*114*		*70 - 130*

QC Association Summary

Client: Innovative Engineering Solutions, Inc
Project/Site: IDS Wayland

TestAmerica Job ID: 480-29929-1

GC/MS VOA

Analysis Batch: 95291

Lab Sample ID	Client Sample ID	Prep Type	Matrix	Method	Prep Batch
480-29929-1	REW-6-20121209-01	Total/NA	Water	8260C	
480-29929-2	REW-7-20121209-01	Total/NA	Water	8260C	
480-29929-6	REW-11-20121209-01	Total/NA	Water	8260C	
LCS 480-95291/4	Lab Control Sample	Total/NA	Water	8260C	
LCSD 480-95291/5	Lab Control Sample Dup	Total/NA	Water	8260C	
MB 480-95291/7	Method Blank	Total/NA	Water	8260C	

Analysis Batch: 95390

Lab Sample ID	Client Sample ID	Prep Type	Matrix	Method	Prep Batch
480-29929-3	REW-8-20121209-01	Total/NA	Water	8260C	
480-29929-4	REW-9-20121209-01	Total/NA	Water	8260C	
480-29929-5	REW-10-20121209-01	Total/NA	Water	8260C	
480-29929-6 - DL	REW-11-20121209-01	Total/NA	Water	8260C	
480-29929-7	REW-12-20121209-01	Total/NA	Water	8260C	
480-29929-8	MW-563-20121209-01	Total/NA	Water	8260C	
LCS 480-95390/4	Lab Control Sample	Total/NA	Water	8260C	
LCSD 480-95390/5	Lab Control Sample Dup	Total/NA	Water	8260C	
MB 480-95390/7	Method Blank	Total/NA	Water	8260C	

Analysis Batch: 95564

Lab Sample ID	Client Sample ID	Prep Type	Matrix	Method	Prep Batch
480-29929-1	REW-6-20121209-01	Total/NA	Water	8260B SIM	
480-29929-2	REW-7-20121209-01	Total/NA	Water	8260B SIM	
480-29929-3	REW-8-20121209-01	Total/NA	Water	8260B SIM	
480-29929-4	REW-9-20121209-01	Total/NA	Water	8260B SIM	
480-29929-5	REW-10-20121209-01	Total/NA	Water	8260B SIM	
480-29929-6	REW-11-20121209-01	Total/NA	Water	8260B SIM	
480-29929-7	REW-12-20121209-01	Total/NA	Water	8260B SIM	
480-29929-8	MW-563-20121209-01	Total/NA	Water	8260B SIM	
480-29929-9	DUPX-20121209-01	Total/NA	Water	8260B SIM	
480-29929-10	TRIP BLANK	Total/NA	Water	8260B SIM	
LCS 480-95564/2	Lab Control Sample	Total/NA	Water	8260B SIM	
LCSD 480-95564/3	Lab Control Sample Dup	Total/NA	Water	8260B SIM	
MB 480-95564/4	Method Blank	Total/NA	Water	8260B SIM	

Analysis Batch: 95590

Lab Sample ID	Client Sample ID	Prep Type	Matrix	Method	Prep Batch
480-29929-9	DUPX-20121209-01	Total/NA	Water	8260C	
480-29929-10	TRIP BLANK	Total/NA	Water	8260C	
LCS 480-95590/4	Lab Control Sample	Total/NA	Water	8260C	
LCSD 480-95590/5	Lab Control Sample Dup	Total/NA	Water	8260C	
MB 480-95590/7	Method Blank	Total/NA	Water	8260C	

Lab Chronicle

Client: Innovative Engineering Solutions, Inc
Project/Site: IDS Wayland

TestAmerica Job ID: 480-29929-1

Client Sample ID: REW-6-20121209-01 — Lab Sample ID: 480-29929-1

Date Collected: 12/09/12 12:00 — **Matrix: Water**
Date Received: 12/11/12 09:00

Prep Type	Batch Type	Batch Method	Run	Dil Factor	Initial Amount	Final Amount	Batch Number	Prepared or Analyzed	Analyst	Lab
Total/NA	Analysis	8260C		10	5 mL	5 mL	95291	12/12/12 05:37	LH	TAL BUF
Total/NA	Analysis	8260B SIM		1	25 mL	25 mL	95564	12/13/12 14:05	TRB	TAL BUF

Client Sample ID: REW-7-20121209-01 — Lab Sample ID: 480-29929-2

Date Collected: 12/09/12 13:15 — **Matrix: Water**
Date Received: 12/11/12 09:00

Prep Type	Batch Type	Batch Method	Run	Dil Factor	Initial Amount	Final Amount	Batch Number	Prepared or Analyzed	Analyst	Lab
Total/NA	Analysis	8260C		10	5 mL	5 mL	95291	12/12/12 06:01	LH	TAL BUF
Total/NA	Analysis	8260B SIM		1	25 mL	25 mL	95564	12/13/12 14:29	TRB	TAL BUF

Client Sample ID: REW-8-20121209-01 — Lab Sample ID: 480-29929-3

Date Collected: 12/09/12 12:45 — **Matrix: Water**
Date Received: 12/11/12 09:00

Prep Type	Batch Type	Batch Method	Run	Dil Factor	Initial Amount	Final Amount	Batch Number	Prepared or Analyzed	Analyst	Lab
Total/NA	Analysis	8260C		5	5 mL	5 mL	95390	12/12/12 18:52	LH	TAL BUF
Total/NA	Analysis	8260B SIM		1	25 mL	25 mL	95564	12/13/12 14:53	TRB	TAL BUF

Client Sample ID: REW-9-20121209-01 — Lab Sample ID: 480-29929-4

Date Collected: 12/09/12 13:45 — **Matrix: Water**
Date Received: 12/11/12 09:00

Prep Type	Batch Type	Batch Method	Run	Dil Factor	Initial Amount	Final Amount	Batch Number	Prepared or Analyzed	Analyst	Lab
Total/NA	Analysis	8260C		1	5 mL	5 mL	95390	12/12/12 19:16	LH	TAL BUF
Total/NA	Analysis	8260B SIM		1	25 mL	25 mL	95564	12/13/12 15:17	TRB	TAL BUF

Client Sample ID: REW-10-20121209-01 — Lab Sample ID: 480-29929-5

Date Collected: 12/09/12 14:15 — **Matrix: Water**
Date Received: 12/11/12 09:00

Prep Type	Batch Type	Batch Method	Run	Dil Factor	Initial Amount	Final Amount	Batch Number	Prepared or Analyzed	Analyst	Lab
Total/NA	Analysis	8260C		1	5 mL	5 mL	95390	12/12/12 19:40	LH	TAL BUF
Total/NA	Analysis	8260B SIM		1	25 mL	25 mL	95564	12/13/12 16:05	TRB	TAL BUF

Client Sample ID: REW-11-20121209-01 — Lab Sample ID: 480-29929-6

Date Collected: 12/09/12 11:25 — **Matrix: Water**
Date Received: 12/11/12 09:00

Prep Type	Batch Type	Batch Method	Run	Dil Factor	Initial Amount	Final Amount	Batch Number	Prepared or Analyzed	Analyst	Lab
Total/NA	Analysis	8260C		10	5 mL	5 mL	95291	12/12/12 07:36	LH	TAL BUF

Lab Chronicle

Client: Innovative Engineering Solutions, Inc
Project/Site: IDS Wayland

TestAmerica Job ID: 480-29929-1

Client Sample ID: REW-11-20121209-01 — Lab Sample ID: 480-29929-6

Date Collected: 12/09/12 11:25 — **Matrix: Water**
Date Received: 12/11/12 09:00

Prep Type	Batch Type	Batch Method	Run	Dil Factor	Initial Amount	Final Amount	Batch Number	Prepared or Analyzed	Analyst	Lab
Total/NA	Analysis	8260C	DL	20	5 mL	5 mL	95390	12/12/12 20:03	LH	TAL BUF
Total/NA	Analysis	8260B SIM		1	25 mL	25 mL	95564	12/13/12 16:29	TRB	TAL BUF

Client Sample ID: REW-12-20121209-01 — Lab Sample ID: 480-29929-7

Date Collected: 12/09/12 14:45 — **Matrix: Water**
Date Received: 12/11/12 09:00

Prep Type	Batch Type	Batch Method	Run	Dil Factor	Initial Amount	Final Amount	Batch Number	Prepared or Analyzed	Analyst	Lab
Total/NA	Analysis	8260C		4	5 mL	5 mL	95390	12/12/12 20:27	LH	TAL BUF
Total/NA	Analysis	8260B SIM		1	25 mL	25 mL	95564	12/13/12 16:53	TRB	TAL BUF

Client Sample ID: MW-563-20121209-01 — Lab Sample ID: 480-29929-8

Date Collected: 12/09/12 15:20 — **Matrix: Water**
Date Received: 12/11/12 09:00

Prep Type	Batch Type	Batch Method	Run	Dil Factor	Initial Amount	Final Amount	Batch Number	Prepared or Analyzed	Analyst	Lab
Total/NA	Analysis	8260C		5	5 mL	5 mL	95390	12/12/12 20:51	LH	TAL BUF
Total/NA	Analysis	8260B SIM		1	25 mL	25 mL	95564	12/13/12 17:17	TRB	TAL BUF

Client Sample ID: DUPX-20121209-01 — Lab Sample ID: 480-29929-9

Date Collected: 12/09/12 00:00 — **Matrix: Water**
Date Received: 12/11/12 09:00

Prep Type	Batch Type	Batch Method	Run	Dil Factor	Initial Amount	Final Amount	Batch Number	Prepared or Analyzed	Analyst	Lab
Total/NA	Analysis	8260B SIM		1	25 mL	25 mL	95564	12/13/12 17:41	TRB	TAL BUF
Total/NA	Analysis	8260C		5	5 mL	5 mL	95590	12/13/12 14:07	RL	TAL BUF

Client Sample ID: TRIP BLANK — Lab Sample ID: 480-29929-10

Date Collected: 12/09/12 00:00 — **Matrix: Water**
Date Received: 12/11/12 09:00

Prep Type	Batch Type	Batch Method	Run	Dil Factor	Initial Amount	Final Amount	Batch Number	Prepared or Analyzed	Analyst	Lab
Total/NA	Analysis	8260B SIM		1	25 mL	25 mL	95564	12/13/12 18:05	TRB	TAL BUF
Total/NA	Analysis	8260C		1	5 mL	5 mL	95590	12/13/12 14:31	RL	TAL BUF

Laboratory References:

TAL BUF = TestAmerica Buffalo, 10 Hazelwood Drive, Amherst, NY 14228-2298, TEL (716)691-2600

Certification Summary

Client: Innovative Engineering Solutions, Inc
Project/Site: IDS Wayland

TestAmerica Job ID: 480-29929-1

Laboratory: TestAmerica Buffalo

All certifications held by this laboratory are listed. Not all certifications are applicable to this report.

Authority	Program	EPA Region	Certification ID	Expiration Date
Arkansas DEQ	State Program	6	88-0686	07-06-13
California	NELAC	9	1169CA	09-30-13
Connecticut	State Program	1	PH-0568	09-30-14
Florida	NELAC	4	E87672	06-30-13
Georgia	State Program	4	N/A	03-31-13
Georgia	State Program	4	956	06-30-13
Georgia	State Program	4	956	06-30-13
Illinois	NELAC	5	200003	09-30-13
Iowa	State Program	7	374	03-01-13
Kansas	NELAC	7	E-10187	01-31-13
Kentucky	State Program	4	90029	12-31-12
Kentucky (UST)	State Program	4	30	04-01-13
Louisiana	NELAC	6	02031	06-30-13
Maine	State Program	1	NY00044	12-04-13
Maryland	State Program	3	294	03-31-13
Massachusetts	State Program	1	M-NY044	06-30-13
Michigan	State Program	5	9937	04-01-13
Minnesota	NELAC	5	036-999-337	12-31-12
New Hampshire	NELAC	1	2973	09-11-13
New Hampshire	NELAC	1	2337	11-17-13
New Jersey	NELAC	2	NY455	06-30-13
New York	NELAC	2	10026	03-31-13
North Dakota	State Program	8	R-176	03-31-13
Oklahoma	State Program	6	9421	08-31-13
Oregon	NELAC	10	NY200003	06-09-13
Pennsylvania	NELAC	3	68-00281	07-31-13
Rhode Island	State Program	1	LAO00328	12-31-13
Tennessee	State Program	4	TN02970	04-01-13
Texas	NELAC	6	T104704412-11-2	07-31-13
USDA	Federal		P330-11-00386	11-22-14
Virginia	NELAC	3	460185	09-14-13
Washington	State Program	10	C784	02-10-13
West Virginia DEP	State Program	3	252	09-30-13
Wisconsin	State Program	5	998310390	08-31-13

Method Summary

Client: Innovative Engineering Solutions, Inc
Project/Site: IDS Wayland

TestAmerica Job ID: 480-29929-1

Method	Method Description	Protocol	Laboratory
8260B SIM	Volatile Organic Compounds (GC/MS)	SW846	TAL BUF
8260C	Volatile Organic Compounds (GC/MS)	MA DEP	TAL BUF

Protocol References:

MA DEP = Massachusetts Department Of Environmental Protection

SW846 = "Test Methods For Evaluating Solid Waste, Physical/Chemical Methods", Third Edition, November 1986 And Its Updates.

Laboratory References:

TAL BUF = TestAmerica Buffalo, 10 Hazelwood Drive, Amherst, NY 14228-2298, TEL (716)691-2600

Sample Summary

Client: Innovative Engineering Solutions, Inc
Project/Site: IDS Wayland

TestAmerica Job ID: 480-29929-1

Lab Sample ID	Client Sample ID	Matrix	Collected	Received
480-29929-1	REW-6-20121209-01	Water	12/09/12 12:00	12/11/12 09:00
480-29929-2	REW-7-20121209-01	Water	12/09/12 13:15	12/11/12 09:00
480-29929-3	REW-8-20121209-01	Water	12/09/12 12:45	12/11/12 09:00
480-29929-4	REW-9-20121209-01	Water	12/09/12 13:45	12/11/12 09:00
480-29929-5	REW-10-20121209-01	Water	12/09/12 14:15	12/11/12 09:00
480-29929-6	REW-11-20121209-01	Water	12/09/12 11:25	12/11/12 09:00
480-29929-7	REW-12-20121209-01	Water	12/09/12 14:45	12/11/12 09:00
480-29929-8	MW-563-20121209-01	Water	12/09/12 15:20	12/11/12 09:00
480-29929-9	DUPX-20121209-01	Water	12/09/12 00:00	12/11/12 09:00
480-29929-10	TRIP BLANK	Water	12/09/12 00:00	12/11/12 09:00

Login Sample Receipt Checklist

Client: Innovative Engineering Solutions, Inc

Job Number: 480-29929-1

Login Number: 29929
List Number: 2
Creator: Janish, Carl

List Source: TestAmerica Buffalo

Question	Answer	Comment
Radioactivity either was not measured or, if measured, is at or below background	True	
The cooler's custody seal, if present, is intact.	True	
The cooler or samples do not appear to have been compromised or tampered with.	True	
Samples were received on ice.	True	
Cooler Temperature is acceptable.	True	
Cooler Temperature is recorded.	True	
COC is present.	True	
COC is filled out in ink and legible.	True	
COC is filled out with all pertinent information.	True	
Is the Field Sampler's name present on COC?	True	
There are no discrepancies between the sample IDs on the containers and the COC.	True	
Samples are received within Holding Time.	True	
Sample containers have legible labels.	True	
Containers are not broken or leaking.	True	
Sample collection date/times are provided.	True	
Appropriate sample containers are used.	True	
Sample bottles are completely filled.	True	
Sample Preservation Verified	True	
There is sufficient vol. for all requested analyses, incl. any requested MS/MSDs	True	
VOA sample vials do not have headspace or bubble is <6mm (1/4") in diameter.	True	
If necessary, staff have been informed of any short hold time or quick TAT needs	True	
Multiphasic samples are not present.	True	
Samples do not require splitting or compositing.	True	
Sampling Company provided.	True	iest
Samples received within 48 hours of sampling.	True	
Samples requiring field filtration have been filtered in the field.	N/A	
Chlorine Residual checked.	N/A	

TestAmerica Westfield
Westfield Executive Park 53 Southampton Road
Westfield, MA 01085
Phone (413) 572-4000 Fax (413) 572-3707

Boston Service Center
240 Bear Hill Rd. Suite 104
Waltham, MA 02451
Phone (781) 466-6900 Fax (781) 466-6901

Chain of Custody Record

TestAmerica
THE LEADER IN ENVIRONMENTAL TESTING

Client Information				
Client Contact: Vicki Parizan	Sampler: Dany Jones	Lab PM:	Carrier Tracking No(s):	COC No: 22234
Company: Innovative Engineering Solutions Inc	Phone: Same	E-Mail: Same		Page: 1 of 1
Address: 25 Spring St	Due Date Requested: 12/24/12			Job #:
City: Walpole	TAT Requested (days):			
State, Zip: MA 02081				
Phone: 508-668-0033	Quote #:			
Email: vparizan@IESIonline.com	PO #: RA-008			
Project Name/number: RA-008	WO #:			
Site: Wayland, MA	SSOW#:			

Analysis Requested

Preservation Codes:
A - HCL; B - NaOH; C - Zn Acetate; D - Nitric Acid; E - NaHSO4; F - MeOH; H - Ascorbic Acid; I - Ice; J - DI Water; M - Hexane; N - None; P - Na2O4S; Q - Na2SO3; R - Na2S2SO3; S - H2SO4; Z - other (specify)

Regulatory programs:
MCP ☐ GW1/S1 ☒; RCP ☐ CT RSR ☐; DEP Form ☐ EDD Required ☐

Sample Identification	Sample Date	Sample Time	Sample Type (C=comp, G=grab)	Matrix (W=water, S=solid, O=waste/oil, BT=Tissue, A=Air)	Sampler's Initials	Field Filtered Sample?	Perform MS/MSD?	8260B	Total Number of containers	Special Instructions/Note:
			Preservation Code:					N		
REW-6-20121209-01	12/9/12	1200	G	W	DJ			X	3	
REW-7-20121209-01	12/9/12	1315	G	W	DJ			X	3	
REW-8-20121209-01	12/9/12	1345	G	W	DJ			X	3	
REW-9-20121209-01	12/9/12	1345	G	W	DJ			X	3	
REW-10-20121209-01	12/9/12	1415	G	W	DJ			X	3	
REW-11-20121209-01	12/9/12	1125	G	W	DJ			X	3	
REW-12-20121209-01	12/9/12	1445	G	W	DJ			X	3	
MW-563-20121209-01	12/9/12	1520	G	W	DJ			X	3	
DupX-20121209-01	12/9/12	—	G	W	L			X	3	
Trip Blank	—	—	—	W	—			X	2	

Possible Hazard Identification
☒ Non-Hazard ☐ Flammable ☐ Skin Irritant ☐ Poison B ☐ Unknown ☐ Radiological

Sample Disposal (A fee may be assessed if samples are retained longer than 1 month)
☐ Return To Client ☒ Disposal By Lab ☐ Archive For _____ Months

Deliverable Requested: I, II, III, IV, Other (specify)

Special Instructions/QC Requirements:

Relinquished by	Date/Time	Company	Received by	Date/Time	Company
[signature]	12/10/12 0520	IEST	[signature]	12/10/12 10:51	TAL
[signature]	12/10/12 1520	TAL	[signature]	12/11/12 0900	
Relinquished by	Date/Time	Company	Received by	Date/Time	Company

Custody Seals Intact: Δ Yes Δ No
Custody Seal No.:
Cooler Temperature(s) °C and Other Remarks: 4.3 #1

TAL-8245-360 1111

TestAmerica

THE LEADER IN ENVIRONMENTAL TESTING

ANALYTICAL REPORT

TestAmerica Laboratories, Inc.
TestAmerica Buffalo
10 Hazelwood Drive
Amherst, NY 14228-2298
Tel: (716)691-2600

TestAmerica Job ID: 480-31428-1
Client Project/Site: IDS Wayland

For:
Innovative Engineering Solutions, Inc
25 Spring Street
Walpole, Massachusetts 02081

Attn: Vicki Pariyar

Authorized for release by:
1/23/2013 4:59:05 PM
Steve Hartmann
Lab Director
steve.hartmann@testamericainc.com

Designee for

Becky Mason
Project Manager II
becky.mason@testamericainc.com

LINKS

Review your project results through TotalAccess

Have a Question? Ask The Expert

Visit us at: www.testamericainc.com

The test results in this report meet all 2003 NELAC and 2009 TNI requirements for accredited parameters, exceptions are noted in this report. This report may not be reproduced except in full, and with written approval from the laboratory. For questions please contact the Project Manager at the e-mail address or telephone number listed on this page.

This report has been electronically signed and authorized by the signatory. Electronic signature is intended to be the legally binding equivalent of a traditionally handwritten signature.

Results relate only to the items tested and the sample(s) as received by the laboratory.

Table of Contents

Cover Page 1
Table of Contents 2
Definitions/Glossary 3
Case Narrative 4
Detection Summary 6
Client Sample Results 8
Surrogate Summary 29
QC Sample Results 30
QC Association Summary 44
Lab Chronicle 45
Certification Summary 47
Method Summary 48
Sample Summary 49
Chain of Custody 50
Receipt Checklists 52

Qualifiers

GC/MS VOA

Qualifier	Qualifier Description
*	LCS or LCSD exceeds the control limits
J	Result is less than the RL but greater than or equal to the MDL and the concentration is an approximate value.
F	MS or MSD exceeds the control limits
F	RPD of the MS and MSD exceeds the control limits

Glossary

Abbreviation	These commonly used abbreviations may or may not be present in this report.
☼	Listed under the "D" column to designate that the result is reported on a dry weight basis
%R	Percent Recovery
CNF	Contains no Free Liquid
DER	Duplicate error ratio (normalized absolute difference)
DL, RA, RE, IN	Indicates a Dilution, Reanalysis, Re-extraction, or additional Initial metals/anion analysis of the sample
DLC	Decision level concentration
EDL	Estimated Detection Limit
EPA	United States Environmental Protection Agency
MDA	Minimum detectable activity
MDC	Minimum detectable concentration
MDL	Method Detection Limit
ML	Minimum Level (Dioxin)
ND	Not detected at the reporting limit (or MDL or EDL if shown)
PQL	Practical Quantitation Limit
QC	Quality Control
RER	Relative error ratio
RL	Reporting Limit or Requested Limit (Radiochemistry)
RPD	Relative Percent Difference, a measure of the relative difference between two points
TEF	Toxicity Equivalent Factor (Dioxin)
TEQ	Toxicity Equivalent Quotient (Dioxin)

Case Narrative

Client: Innovative Engineering Solutions, Inc
Project/Site: IDS Wayland

TestAmerica Job ID: 480-31428-1

Job ID: 480-31428-1

Laboratory: TestAmerica Buffalo

Narrative

With the exceptions noted as flags or footnotes, standard analytical protocols were followed in the analysis of the samples and no problems were encountered or anomalies observed. In addition all laboratory quality control samples were within established control limits, with any exceptions noted below. Each sample was analyzed to achieve the lowest possible reporting limit within the constraints of the method. In some cases, due to interference or analytes present at high concentrations, samples were diluted. For diluted samples, the reporting limits are adjusted relative to the dilution required.

Calculations are performed before rounding to avoid round-off errors in calculated results.

All holding times were met and proper preservation noted for the methods performed on these samples, unless otherwise detailed in the individual sections below.

RECEIPT

The samples were received on 01/11/2013; the samples arrived in good condition, properly preserved and on ice. The temperature of the coolers at receipt was 4.1 C.

VOLATILE ORGANIC COMPOUNDS (GC-MS)

2-Butanone (MEK) failed the recovery criteria high for LCS/LCSD 480-99374/4&5. 2-Butanone (MEK) failed the recovery criteria high for LCS/LCSD 480-99567/4&5. This is due to the coelution with Ethyl Acetate in the mega mix spike solution. Refer to the QC report for details.

2-Butanone (MEK) failed the recovery criteria high for the MS/MSD of sample REW-1-20130110-01MS (480-31428-1) in batch 480-99567. Acetone failed the recovery criteria low for the MS. Trichlorofluoromethane exceeded the rpd limit. Refer to the QC report for details.

Samples REW-1-20130110-01 (480-31428-1)[100X], REW-1-20130110-01 (480-31428-1)[5X], REW-6-20130110-01 (480-31428-2)[8X], REW-7-20130110-01 (480-31428-3)[20X], REW-8-20130110-01 (480-31428-4)[5X], REW-12-20130110-01 (480-31428-5)[4X], MW-261S-20130110-01 (480-31428-6)[400X], MW-261S-20130110-01 (480-31428-6)[5X], MW-265M-20130110-01 (480-31428-7)[100X], MW-552-20130110-01 (480-31428-8)[40X], MW-562-20130110-01 (480-31428-9)[40X], MW-563-20130110-01 (480-31428-10)[5X] and DUP-X-20130110-01 (480-31428-11)[4X] required dilution prior to analysis to bring the concentration of target analytes within the calibration range. The reporting limits have been adjusted accordingly.

With the exception of diluted samples, per question G on the MassDEP Analytical Protocol Certification Form, TestAmerica's routine reporting limits do not achieve the CAM reporting limits specified in this CAM protocol(s) for Carbon Disulfide, Isopropyl Ether, Naphthalene, tert-Butyl Ethyl Ether, tert-Amyl Methyl Ether, & Tetrahydrofuran.

No other difficulties were encountered during the volatile organic compounds (GC-MS) analyses.

All other quality control parameters were within the acceptance limits.

MassDEP Analytical Protocol Certification Form

Laboratory Name: **TestAmerica Buffalo** Project #: **480-31428-1**

Project Location: **IDS Wayland** RTN:

This form provides certifications for the following data set: list Laboratory Sample ID Number(s):

480-31428-[1-12]

Matrices: [X] Groundwater/Surface Water [ ] Soil/Sediment [ ] Drinking Water [ ] Air [ ] Other:

CAM Protocols (check all that apply below):

8260 VOC CAM II A [X]	7470/7471 Hg CAM III B [ ]	Mass DEP VPH CAM IV A [ ]	8081 Pesticides CAM V B [ ]	7196 Hex Cr CAM VI B [ ]	Mass DEP APH CAM IX A [ ]
8270 SVOC CAM II B [ ]	7010 Metals CAM III C [ ]	Mass DEP EPH CAM IV B [ ]	8151 Herbicides CAM V C [ ]	8330 Explosives CAM VIII A [ ]	TO-15 VOC CAM IX B [ ]
6010 Metals CAM III A [ ]	6020 Metals CAM III D [ ]	8082 PCB CAM V A [ ]	9014 Total Cyanide/PAC CAM VI A [ ]	6860 Perchlorate CAM VIII B [ ]	

Affirmative Responses to Questions A through F are required for "Presumptive Certainty" status

A	Were all samples received in a condition consistent with those described on the Chain-of-Custody, properly preserved (including temperature) in the field or laboratory, and prepared/analyzed within method holding time.	[X] Yes [ ] No
B	Were the analytical method(s) and all associated QC requirements specified in the selected CAM protocol(s) followed?	[X] Yes [ ] No
C	Were all required corrective actions and analytical response actions specified in the selected CAM protocol(s) implemented for all identified performance standard non-conformances?	[X] Yes [ ] No
D	Does the laboratory report comply with all the reporting requirements specified in CAM VII A, "Quality Assurance and Quality Control Guidelines for the Acquisition and Reporting of Analytical Data"?	[X] Yes [ ] No
E	a. VPH, EPH and APH Methods only: Was each method conducted without significant modification(s)? (Refer to the individual method(s) for a list of significant modifications). b. APH and TO-15 Methods only: Was the complete analyte list reported for each method?	[ ] Yes [ ] No [ ] Yes [ ] No
F	Were all applicable CAM protocol QC and performance standard non-conformances identified and evaluated in a laboratory narrative (including all "No" responses to Questions A through E)?	[X] Yes [ ] No

Responses to Questions G, H and I below are required for "Presumptive Certainty" status

G	Were the reporting limits at or below all CAM reporting limits specified in the selected CAM protocol(s)?	[ ] Yes [X] No[1]

***Data User Note:* Data that achieve "Presumptive Certainty" status may not necessarily meet the data usability and representativeness requirements described in 310 CMR 40. 1056 (2)(k) and WCS-07-350**

H	Were **all** QC performance standards specified in the CAM protocol(s) achieved?	[ ] Yes [X] No[1]
I	Were results reported for the complete analyte list specified in the selected CAM protocol(s) ?	[X] Yes [ ] No[1]

[1] All negative responses must be addressed in an attached laboratory narrative.

I, the undersigned, attest under the pains and penalties of perjury that, based upon my personal inquiry of those responsible for obtaining the information, the material contained in this analytical report is, to the best of my knowledge and belief, is accurate and complete.

Signature: Position: Service Center Manager/Lab Director-TestAmerica Westfield

Printed Name: Steven C. Hartmann Date: 1/23/13 16:52

This form has been electronically signed and approved

Detection Summary

Client: Innovative Engineering Solutions, Inc
Project/Site: IDS Wayland

TestAmerica Job ID: 480-31428-1

Client Sample ID: REW-1-20130110-01 — Lab Sample ID: 480-31428-1

Analyte	Result	Qualifier	RL	MDL	Unit	Dil Fac	D	Method	Prep Type
2-Butanone (MEK)	180	*	50	6.6	ug/L	5		8260C	Total/NA
cis-1,2-Dichloroethene	11		5.0	4.1	ug/L	5		8260C	Total/NA
Tetrahydrofuran	16	J	50	6.3	ug/L	5		8260C	Total/NA
Vinyl chloride	10		2.5	4.5	ug/L	5		8260C	Total/NA
Acetone - DL	29000		5000	300	ug/L	100		8260C	Total/NA

Client Sample ID: REW-6-20130110-01 — Lab Sample ID: 480-31428-2

Analyte	Result	Qualifier	RL	MDL	Unit	Dil Fac	D	Method	Prep Type
cis-1,2-Dichloroethene	320		8.0	6.5	ug/L	8		8260C	Total/NA
Tetrachloroethene	17		8.0	2.9	ug/L	8		8260C	Total/NA
Trichloroethene	530		8.0	3.7	ug/L	8		8260C	Total/NA
Vinyl chloride	13		4.0	7.2	ug/L	8		8260C	Total/NA

Client Sample ID: REW-7-20130110-01 — Lab Sample ID: 480-31428-3

Analyte	Result	Qualifier	RL	MDL	Unit	Dil Fac	D	Method	Prep Type
1,1-Dichloroethane	4.9		1.0	0.38	ug/L	1		8260C	Total/NA
1,1-Dichloroethene	1.9		1.0	0.29	ug/L	1		8260C	Total/NA
Benzene	1.3		1.0	0.41	ug/L	1		8260C	Total/NA
Chlorobenzene	0.76	J	1.0	0.75	ug/L	1		8260C	Total/NA
Tetrachloroethene	12		1.0	0.36	ug/L	1		8260C	Total/NA
trans-1,2-Dichloroethene	2.2		1.0	0.90	ug/L	1		8260C	Total/NA
cis-1,2-Dichloroethene - DL	1000		20	16	ug/L	20		8260C	Total/NA
Trichloroethene - DL	350		20	9.2	ug/L	20		8260C	Total/NA
Vinyl chloride - DL	140		10	18	ug/L	20		8260C	Total/NA

Client Sample ID: REW-8-20130110-01 — Lab Sample ID: 480-31428-4

Analyte	Result	Qualifier	RL	MDL	Unit	Dil Fac	D	Method	Prep Type
1,1-Dichloroethane	1.9		1.0	0.38	ug/L	1		8260C	Total/NA
1,1-Dichloroethene	1.3		1.0	0.29	ug/L	1		8260C	Total/NA
Benzene	1.0		1.0	0.41	ug/L	1		8260C	Total/NA
Tetrachloroethene	7.5		1.0	0.36	ug/L	1		8260C	Total/NA
Tetrahydrofuran	1.3	J	10	1.3	ug/L	1		8260C	Total/NA
trans-1,2-Dichloroethene	11		1.0	0.90	ug/L	1		8260C	Total/NA
Vinyl chloride	44		0.50	0.90	ug/L	1		8260C	Total/NA
cis-1,2-Dichloroethene - DL	370		5.0	4.1	ug/L	5		8260C	Total/NA
Trichloroethene - DL	340		5.0	2.3	ug/L	5		8260C	Total/NA

Client Sample ID: REW-12-20130110-01 — Lab Sample ID: 480-31428-5

Analyte	Result	Qualifier	RL	MDL	Unit	Dil Fac	D	Method	Prep Type
1,1-Dichloroethane	1.2		1.0	0.38	ug/L	1		8260C	Total/NA
1,1-Dichloroethene	0.50	J	1.0	0.29	ug/L	1		8260C	Total/NA
Benzene	0.41	J	1.0	0.41	ug/L	1		8260C	Total/NA
Tetrachloroethene	9.8		1.0	0.36	ug/L	1		8260C	Total/NA
Vinyl chloride	14		0.50	0.90	ug/L	1		8260C	Total/NA
cis-1,2-Dichloroethene - DL	270		4.0	3.2	ug/L	4		8260C	Total/NA
Trichloroethene - DL	200		4.0	1.8	ug/L	4		8260C	Total/NA

Detection Summary

Client: Innovative Engineering Solutions, Inc
Project/Site: IDS Wayland

TestAmerica Job ID: 480-31428-1

Client Sample ID: MW-261S-20130110-01 — Lab Sample ID: 480-31428-6

Analyte	Result	Qualifier	RL	MDL	Unit	Dil Fac	D	Method	Prep Type
2-Butanone (MEK)	140	*	50	6.6	ug/L	5		8260C	Total/NA
cis-1,2-Dichloroethene	30		5.0	4.1	ug/L	5		8260C	Total/NA
Tetrahydrofuran	10	J	50	6.3	ug/L	5		8260C	Total/NA
Trichloroethene	6.3		5.0	2.3	ug/L	5		8260C	Total/NA
Vinyl chloride	78		2.5	4.5	ug/L	5		8260C	Total/NA
Acetone - DL	170000		20000	1200	ug/L	400		8260C	Total/NA

Client Sample ID: MW-265M-20130110-01 — Lab Sample ID: 480-31428-7

Analyte	Result	Qualifier	RL	MDL	Unit	Dil Fac	D	Method	Prep Type
Acetone - DL	46000		5000	300	ug/L	100		8260C	Total/NA

Client Sample ID: MW-552-20130110-01 — Lab Sample ID: 480-31428-8

Analyte	Result	Qualifier	RL	MDL	Unit	Dil Fac	D	Method	Prep Type
Acetone	18000		2000	120	ug/L	40		8260C	Total/NA
cis-1,2-Dichloroethene	1400		40	32	ug/L	40		8260C	Total/NA
Trichloroethene	71		40	18	ug/L	40		8260C	Total/NA
Vinyl chloride	160		20	36	ug/L	40		8260C	Total/NA

Client Sample ID: MW-562-20130110-01 — Lab Sample ID: 480-31428-9

Analyte	Result	Qualifier	RL	MDL	Unit	Dil Fac	D	Method	Prep Type
2-Butanone (MEK)	120	J *	400	53	ug/L	40		8260C	Total/NA
Acetone	16000		2000	120	ug/L	40		8260C	Total/NA

Client Sample ID: MW-563-20130110-01 — Lab Sample ID: 480-31428-10

Analyte	Result	Qualifier	RL	MDL	Unit	Dil Fac	D	Method	Prep Type
1,1-Dichloroethane	3.4	J	5.0	1.9	ug/L	5		8260C	Total/NA
1,1-Dichloroethene	1.9	J	5.0	1.5	ug/L	5		8260C	Total/NA
Acetone	61	J	250	15	ug/L	5		8260C	Total/NA
cis-1,2-Dichloroethene	380		5.0	4.1	ug/L	5		8260C	Total/NA
Tetrachloroethene	3.0	J	5.0	1.8	ug/L	5		8260C	Total/NA
Trichloroethene	150		5.0	2.3	ug/L	5		8260C	Total/NA
Vinyl chloride	47		2.5	4.5	ug/L	5		8260C	Total/NA

Client Sample ID: DUP-X-20130110-01 — Lab Sample ID: 480-31428-11

Analyte	Result	Qualifier	RL	MDL	Unit	Dil Fac	D	Method	Prep Type
1,1-Dichloroethane	1.3		1.0	0.38	ug/L	1		8260C	Total/NA
1,1-Dichloroethene	0.39	J	1.0	0.29	ug/L	1		8260C	Total/NA
Benzene	0.41	J	1.0	0.41	ug/L	1		8260C	Total/NA
Tetrachloroethene	9.5		1.0	0.36	ug/L	1		8260C	Total/NA
Vinyl chloride	14		0.50	0.90	ug/L	1		8260C	Total/NA
cis-1,2-Dichloroethene - DL	260		4.0	3.2	ug/L	4		8260C	Total/NA
Trichloroethene - DL	200		4.0	1.8	ug/L	4		8260C	Total/NA

Client Sample ID: Trip Blanks — Lab Sample ID: 480-31428-12

Analyte	Result	Qualifier	RL	MDL	Unit	Dil Fac	D	Method	Prep Type
Acetone	5.2	J	50	3.0	ug/L	1		8260C	Total/NA

Client: Innovative Engineering Solutions, Inc
Project/Site: IDS Wayland

TestAmerica Job ID: 480-31428-1

Client Sample ID: REW-1-20130110-01
Date Collected: 01/10/13 11:50
Date Received: 01/11/13 08:00

Lab Sample ID: 480-31428-1
Matrix: Water

Method: 8260C - Volatile Organic Compounds (GC/MS)

Analyte	Result	Qualifier	RL	MDL	Unit	D	Prepared	Analyzed	Dil Fac
1,1,1,2-Tetrachloroethane	ND		5.0	1.8	ug/L			01/14/13 17:14	5
1,1,1-Trichloroethane	ND		5.0	4.1	ug/L			01/14/13 17:14	5
1,1,2,2-Tetrachloroethane	ND		2.5	1.1	ug/L			01/14/13 17:14	5
1,1,2-Trichloroethane	ND		5.0	1.2	ug/L			01/14/13 17:14	5
1,1-Dichloroethane	ND		5.0	1.9	ug/L			01/14/13 17:14	5
1,1-Dichloroethene	ND		5.0	1.5	ug/L			01/14/13 17:14	5
1,1-Dichloropropene	ND		5.0	3.6	ug/L			01/14/13 17:14	5
1,2,3-Trichlorobenzene	ND		5.0	2.1	ug/L			01/14/13 17:14	5
1,2,3-Trichloropropane	ND		5.0	4.5	ug/L			01/14/13 17:14	5
1,2,4-Trichlorobenzene	ND		5.0	2.1	ug/L			01/14/13 17:14	5
1,2,4-Trimethylbenzene	ND		5.0	3.8	ug/L			01/14/13 17:14	5
1,2-Dibromo-3-Chloropropane	ND		25	2.0	ug/L			01/14/13 17:14	5
1,2-Dichlorobenzene	ND		5.0	4.0	ug/L			01/14/13 17:14	5
1,2-Dichloroethane	ND		5.0	1.1	ug/L			01/14/13 17:14	5
1,2-Dichloropropane	ND		5.0	3.6	ug/L			01/14/13 17:14	5
1,3,5-Trimethylbenzene	ND		5.0	3.9	ug/L			01/14/13 17:14	5
1,3-Dichlorobenzene	ND		5.0	3.9	ug/L			01/14/13 17:14	5
1,3-Dichloropropane	ND		5.0	3.8	ug/L			01/14/13 17:14	5
1,4-Dichlorobenzene	ND		5.0	4.2	ug/L			01/14/13 17:14	5
1,4-Dioxane	ND		250	47	ug/L			01/14/13 17:14	5
2,2-Dichloropropane	ND		5.0	2.0	ug/L			01/14/13 17:14	5
2-Butanone (MEK)	**180**	*	50	6.6	ug/L			01/14/13 17:14	5
2-Chlorotoluene	ND		5.0	4.3	ug/L			01/14/13 17:14	5
2-Hexanone	ND		50	6.2	ug/L			01/14/13 17:14	5
4-Chlorotoluene	ND		5.0	4.2	ug/L			01/14/13 17:14	5
4-Isopropyltoluene	ND		5.0	1.6	ug/L			01/14/13 17:14	5
4-Methyl-2-pentanone (MIBK)	ND		50	11	ug/L			01/14/13 17:14	5
Benzene	ND		5.0	2.1	ug/L			01/14/13 17:14	5
Bromobenzene	ND		5.0	4.0	ug/L			01/14/13 17:14	5
Bromoform	ND		5.0	1.3	ug/L			01/14/13 17:14	5
Bromomethane	ND		10	3.5	ug/L			01/14/13 17:14	5
Carbon disulfide	ND		50	0.95	ug/L			01/14/13 17:14	5
Carbon tetrachloride	ND		5.0	1.4	ug/L			01/14/13 17:14	5
Chlorobenzene	ND		5.0	3.8	ug/L			01/14/13 17:14	5
Chlorobromomethane	ND		5.0	4.4	ug/L			01/14/13 17:14	5
Chlorodibromomethane	ND		2.5	1.6	ug/L			01/14/13 17:14	5
Chloroethane	ND		10	1.6	ug/L			01/14/13 17:14	5
Chloroform	ND		5.0	1.7	ug/L			01/14/13 17:14	5
Chloromethane	ND		10	1.8	ug/L			01/14/13 17:14	5
cis-1,2-Dichloroethene	**11**		5.0	4.1	ug/L			01/14/13 17:14	5
cis-1,3-Dichloropropene	ND		2.0	1.8	ug/L			01/14/13 17:14	5
Dichlorobromomethane	ND		2.5	2.0	ug/L			01/14/13 17:14	5
Dichlorodifluoromethane	ND		5.0	3.4	ug/L			01/14/13 17:14	5
Ethyl ether	ND		5.0	3.6	ug/L			01/14/13 17:14	5
Ethylbenzene	ND		5.0	3.7	ug/L			01/14/13 17:14	5
Ethylene Dibromide	ND		5.0	3.7	ug/L			01/14/13 17:14	5
Hexachlorobutadiene	ND		2.0	1.4	ug/L			01/14/13 17:14	5
Isopropyl ether	ND		50	3.0	ug/L			01/14/13 17:14	5
Isopropylbenzene	ND		5.0	4.0	ug/L			01/14/13 17:14	5

Client Sample ID: REW-1-20130110-01

Lab Sample ID: 480-31428-1

Date Collected: 01/10/13 11:50

Matrix: Water

Date Received: 01/11/13 08:00

Method: 8260C - Volatile Organic Compounds (GC/MS) (Continued)

Analyte	Result	Qualifier	RL	MDL	Unit	D	Prepared	Analyzed	Dil Fac
Methyl tert-butyl ether	ND		5.0	0.80	ug/L			01/14/13 17:14	5
Methylene Chloride	ND		5.0	2.2	ug/L			01/14/13 17:14	5
m-Xylene & p-Xylene	ND		10	3.3	ug/L			01/14/13 17:14	5
Naphthalene	ND		25	2.2	ug/L			01/14/13 17:14	5
n-Butylbenzene	ND		5.0	3.2	ug/L			01/14/13 17:14	5
N-Propylbenzene	ND		5.0	3.5	ug/L			01/14/13 17:14	5
o-Xylene	ND		5.0	3.8	ug/L			01/14/13 17:14	5
sec-Butylbenzene	ND		5.0	3.8	ug/L			01/14/13 17:14	5
Styrene	ND		5.0	3.7	ug/L			01/14/13 17:14	5
Tert-amyl methyl ether	ND		25	1.4	ug/L			01/14/13 17:14	5
Tert-butyl ethyl ether	ND		25	1.5	ug/L			01/14/13 17:14	5
tert-Butylbenzene	ND		5.0	4.1	ug/L			01/14/13 17:14	5
Tetrachloroethene	ND		5.0	1.8	ug/L			01/14/13 17:14	5
Tetrahydrofuran	**16**	**J**	50	6.3	ug/L			01/14/13 17:14	5
Toluene	ND		5.0	2.6	ug/L			01/14/13 17:14	5
trans-1,2-Dichloroethene	ND		5.0	4.5	ug/L			01/14/13 17:14	5
trans-1,3-Dichloropropene	ND		2.0	1.9	ug/L			01/14/13 17:14	5
Trichloroethene	ND		5.0	2.3	ug/L			01/14/13 17:14	5
Trichlorofluoromethane	ND		5.0	4.4	ug/L			01/14/13 17:14	5
Vinyl chloride	**10**		2.5	4.5	ug/L			01/14/13 17:14	5
Dibromomethane	ND		5.0	2.1	ug/L			01/14/13 17:14	5

Surrogate	*%Recovery*	*Qualifier*	*Limits*	*Prepared*	*Analyzed*	*Dil Fac*
Toluene-d8 (Surr)	*98*		*70 - 130*		*01/14/13 17:14*	*5*
1,2-Dichloroethane-d4 (Surr)	*102*		*70 - 130*		*01/14/13 17:14*	*5*
4-Bromofluorobenzene (Surr)	*92*		*70 - 130*		*01/14/13 17:14*	*5*

Method: 8260C - Volatile Organic Compounds (GC/MS) - DL

Analyte	Result	Qualifier	RL	MDL	Unit	D	Prepared	Analyzed	Dil Fac
Acetone	**29000**		5000	300	ug/L			01/15/13 14:31	100

Surrogate	*%Recovery*	*Qualifier*	*Limits*	*Prepared*	*Analyzed*	*Dil Fac*
Toluene-d8 (Surr)	*98*		*70 - 130*		*01/15/13 14:31*	*100*
1,2-Dichloroethane-d4 (Surr)	*103*		*70 - 130*		*01/15/13 14:31*	*100*
4-Bromofluorobenzene (Surr)	*91*		*70 - 130*		*01/15/13 14:31*	*100*

Client Sample ID: REW-6-20130110-01

Lab Sample ID: 480-31428-2

Date Collected: 01/10/13 09:50

Matrix: Water

Date Received: 01/11/13 08:00

Method: 8260C - Volatile Organic Compounds (GC/MS)

Analyte	Result	Qualifier	RL	MDL	Unit	D	Prepared	Analyzed	Dil Fac
1,1,1,2-Tetrachloroethane	ND		8.0	2.8	ug/L			01/15/13 14:56	8
1,1,1-Trichloroethane	ND		8.0	6.6	ug/L			01/15/13 14:56	8
1,1,2,2-Tetrachloroethane	ND		4.0	1.7	ug/L			01/15/13 14:56	8
1,1,2-Trichloroethane	ND		8.0	1.8	ug/L			01/15/13 14:56	8
1,1-Dichloroethane	ND		8.0	3.0	ug/L			01/15/13 14:56	8
1,1-Dichloroethene	ND		8.0	2.3	ug/L			01/15/13 14:56	8
1,1-Dichloropropene	ND		8.0	5.8	ug/L			01/15/13 14:56	8
1,2,3-Trichlorobenzene	ND		8.0	3.3	ug/L			01/15/13 14:56	8

Client Sample ID: REW-6-20130110-01
Date Collected: 01/10/13 09:50
Date Received: 01/11/13 08:00

Lab Sample ID: 480-31428-2
Matrix: Water

Method: 8260C - Volatile Organic Compounds (GC/MS) (Continued)

Analyte	Result	Qualifier	RL	MDL	Unit	D	Prepared	Analyzed	Dil Fac
1,2,3-Trichloropropane	ND		8.0	7.1	ug/L			01/15/13 14:56	8
1,2,4-Trichlorobenzene	ND		8.0	3.3	ug/L			01/15/13 14:56	8
1,2,4-Trimethylbenzene	ND		8.0	6.0	ug/L			01/15/13 14:56	8
1,2-Dibromo-3-Chloropropane	ND		40	3.1	ug/L			01/15/13 14:56	8
1,2-Dichlorobenzene	ND		8.0	6.3	ug/L			01/15/13 14:56	8
1,2-Dichloroethane	ND		8.0	1.7	ug/L			01/15/13 14:56	8
1,2-Dichloropropane	ND		8.0	5.8	ug/L			01/15/13 14:56	8
1,3,5-Trimethylbenzene	ND		8.0	6.2	ug/L			01/15/13 14:56	8
1,3-Dichlorobenzene	ND		8.0	6.2	ug/L			01/15/13 14:56	8
1,3-Dichloropropane	ND		8.0	6.0	ug/L			01/15/13 14:56	8
1,4-Dichlorobenzene	ND		8.0	6.7	ug/L			01/15/13 14:56	8
1,4-Dioxane	ND		400	75	ug/L			01/15/13 14:56	8
2,2-Dichloropropane	ND		8.0	3.2	ug/L			01/15/13 14:56	8
2-Butanone (MEK)	ND	*	80	11	ug/L			01/15/13 14:56	8
2-Chlorotoluene	ND		8.0	6.9	ug/L			01/15/13 14:56	8
2-Hexanone	ND		80	9.9	ug/L			01/15/13 14:56	8
4-Chlorotoluene	ND		8.0	6.7	ug/L			01/15/13 14:56	8
4-Isopropyltoluene	ND		8.0	2.5	ug/L			01/15/13 14:56	8
4-Methyl-2-pentanone (MIBK)	ND		80	17	ug/L			01/15/13 14:56	8
Acetone	ND		400	24	ug/L			01/15/13 14:56	8
Benzene	ND		8.0	3.3	ug/L			01/15/13 14:56	8
Bromobenzene	ND		8.0	6.4	ug/L			01/15/13 14:56	8
Bromoform	ND		8.0	2.1	ug/L			01/15/13 14:56	8
Bromomethane	ND		16	5.5	ug/L			01/15/13 14:56	8
Carbon disulfide	ND		80	1.5	ug/L			01/15/13 14:56	8
Carbon tetrachloride	ND		8.0	2.2	ug/L			01/15/13 14:56	8
Chlorobenzene	ND		8.0	6.0	ug/L			01/15/13 14:56	8
Chlorobromomethane	ND		8.0	7.0	ug/L			01/15/13 14:56	8
Chlorodibromomethane	ND		4.0	2.6	ug/L			01/15/13 14:56	8
Chloroethane	ND		16	2.6	ug/L			01/15/13 14:56	8
Chloroform	ND		8.0	2.7	ug/L			01/15/13 14:56	8
Chloromethane	ND		16	2.8	ug/L			01/15/13 14:56	8
cis-1,2-Dichloroethene	**320**		8.0	6.5	ug/L			01/15/13 14:56	8
cis-1,3-Dichloropropene	ND		3.2	2.9	ug/L			01/15/13 14:56	8
Dichlorobromomethane	ND		4.0	3.1	ug/L			01/15/13 14:56	8
Dichlorodifluoromethane	ND		8.0	5.4	ug/L			01/15/13 14:56	8
Ethyl ether	ND		8.0	5.8	ug/L			01/15/13 14:56	8
Ethylbenzene	ND		8.0	5.9	ug/L			01/15/13 14:56	8
Ethylene Dibromide	ND		8.0	5.8	ug/L			01/15/13 14:56	8
Hexachlorobutadiene	ND		3.2	2.2	ug/L			01/15/13 14:56	8
Isopropyl ether	ND		80	4.7	ug/L			01/15/13 14:56	8
Isopropylbenzene	ND		8.0	6.3	ug/L			01/15/13 14:56	8
Methyl tert-butyl ether	ND		8.0	1.3	ug/L			01/15/13 14:56	8
Methylene Chloride	ND		8.0	3.5	ug/L			01/15/13 14:56	8
m-Xylene & p-Xylene	ND		16	5.3	ug/L			01/15/13 14:56	8
Naphthalene	ND		40	3.4	ug/L			01/15/13 14:56	8
n-Butylbenzene	ND		8.0	5.1	ug/L			01/15/13 14:56	8
N-Propylbenzene	ND		8.0	5.5	ug/L			01/15/13 14:56	8
o-Xylene	ND		8.0	6.1	ug/L			01/15/13 14:56	8

Client Sample ID: REW-6-20130110-01

Lab Sample ID: 480-31428-2

Date Collected: 01/10/13 09:50

Matrix: Water

Date Received: 01/11/13 08:00

Method: 8260C - Volatile Organic Compounds (GC/MS) (Continued)

Analyte	Result	Qualifier	RL	MDL	Unit	D	Prepared	Analyzed	Dil Fac
sec-Butylbenzene	ND		8.0	6.0	ug/L			01/15/13 14:56	8
Styrene	ND		8.0	5.8	ug/L			01/15/13 14:56	8
Tert-amyl methyl ether	ND		40	2.2	ug/L			01/15/13 14:56	8
Tert-butyl ethyl ether	ND		40	2.4	ug/L			01/15/13 14:56	8
tert-Butylbenzene	ND		8.0	6.5	ug/L			01/15/13 14:56	8
Tetrachloroethene	**17**		8.0	2.9	ug/L			01/15/13 14:56	8
Tetrahydrofuran	ND		80	10	ug/L			01/15/13 14:56	8
Toluene	ND		8.0	4.1	ug/L			01/15/13 14:56	8
trans-1,2-Dichloroethene	ND		8.0	7.2	ug/L			01/15/13 14:56	8
trans-1,3-Dichloropropene	ND		3.2	3.0	ug/L			01/15/13 14:56	8
Trichloroethene	**530**		8.0	3.7	ug/L			01/15/13 14:56	8
Trichlorofluoromethane	ND		8.0	7.0	ug/L			01/15/13 14:56	8
Vinyl chloride	**13**		4.0	7.2	ug/L			01/15/13 14:56	8
Dibromomethane	ND		8.0	3.3	ug/L			01/15/13 14:56	8

Surrogate	*%Recovery*	*Qualifier*	*Limits*	*Prepared*	*Analyzed*	*Dil Fac*
Toluene-d8 (Surr)	*92*		*70 - 130*		*01/15/13 14:56*	*8*
1,2-Dichloroethane-d4 (Surr)	*98*		*70 - 130*		*01/15/13 14:56*	*8*
4-Bromofluorobenzene (Surr)	*87*		*70 - 130*		*01/15/13 14:56*	*8*

Client Sample ID: REW-7-20130110-01

Lab Sample ID: 480-31428-3

Date Collected: 01/10/13 11:10

Matrix: Water

Date Received: 01/11/13 08:00

Method: 8260C - Volatile Organic Compounds (GC/MS)

Analyte	Result	Qualifier	RL	MDL	Unit	D	Prepared	Analyzed	Dil Fac
1,1,1,2-Tetrachloroethane	ND		1.0	0.35	ug/L			01/14/13 18:04	1
1,1,1-Trichloroethane	ND		1.0	0.82	ug/L			01/14/13 18:04	1
1,1,2,2-Tetrachloroethane	ND		0.50	0.21	ug/L			01/14/13 18:04	1
1,1,2-Trichloroethane	ND		1.0	0.23	ug/L			01/14/13 18:04	1
1,1-Dichloroethane	**4.9**		1.0	0.38	ug/L			01/14/13 18:04	1
1,1-Dichloroethene	**1.9**		1.0	0.29	ug/L			01/14/13 18:04	1
1,1-Dichloropropene	ND		1.0	0.72	ug/L			01/14/13 18:04	1
1,2,3-Trichlorobenzene	ND		1.0	0.41	ug/L			01/14/13 18:04	1
1,2,3-Trichloropropane	ND		1.0	0.89	ug/L			01/14/13 18:04	1
1,2,4-Trichlorobenzene	ND		1.0	0.41	ug/L			01/14/13 18:04	1
1,2,4-Trimethylbenzene	ND		1.0	0.75	ug/L			01/14/13 18:04	1
1,2-Dibromo-3-Chloropropane	ND		5.0	0.39	ug/L			01/14/13 18:04	1
1,2-Dichlorobenzene	ND		1.0	0.79	ug/L			01/14/13 18:04	1
1,2-Dichloroethane	ND		1.0	0.21	ug/L			01/14/13 18:04	1
1,2-Dichloropropane	ND		1.0	0.72	ug/L			01/14/13 18:04	1
1,3,5-Trimethylbenzene	ND		1.0	0.77	ug/L			01/14/13 18:04	1
1,3-Dichlorobenzene	ND		1.0	0.78	ug/L			01/14/13 18:04	1
1,3-Dichloropropane	ND		1.0	0.75	ug/L			01/14/13 18:04	1
1,4-Dichlorobenzene	ND		1.0	0.84	ug/L			01/14/13 18:04	1
1,4-Dioxane	ND		50	9.3	ug/L			01/14/13 18:04	1
2,2-Dichloropropane	ND		1.0	0.40	ug/L			01/14/13 18:04	1
2-Butanone (MEK)	ND	*	10	1.3	ug/L			01/14/13 18:04	1
2-Chlorotoluene	ND		1.0	0.86	ug/L			01/14/13 18:04	1
2-Hexanone	ND		10	1.2	ug/L			01/14/13 18:04	1

Client Sample ID: REW-7-20130110-01

Lab Sample ID: 480-31428-3

Date Collected: 01/10/13 11:10

Matrix: Water

Date Received: 01/11/13 08:00

Method: 8260C - Volatile Organic Compounds (GC/MS) (Continued)

Analyte	Result	Qualifier	RL	MDL	Unit	D	Prepared	Analyzed	Dil Fac
4-Chlorotoluene	ND		1.0	0.84	ug/L			01/14/13 18:04	1
4-Isopropyltoluene	ND		1.0	0.31	ug/L			01/14/13 18:04	1
4-Methyl-2-pentanone (MIBK)	ND		10	2.1	ug/L			01/14/13 18:04	1
Acetone	ND		50	3.0	ug/L			01/14/13 18:04	1
Benzene	**1.3**		1.0	0.41	ug/L			01/14/13 18:04	1
Bromobenzene	ND		1.0	0.80	ug/L			01/14/13 18:04	1
Bromoform	ND		1.0	0.26	ug/L			01/14/13 18:04	1
Bromomethane	ND		2.0	0.69	ug/L			01/14/13 18:04	1
Carbon disulfide	ND		10	0.19	ug/L			01/14/13 18:04	1
Carbon tetrachloride	ND		1.0	0.27	ug/L			01/14/13 18:04	1
Chlorobenzene	**0.76**	**J**	1.0	0.75	ug/L			01/14/13 18:04	1
Chlorobromomethane	ND		1.0	0.87	ug/L			01/14/13 18:04	1
Chlorodibromomethane	ND		0.50	0.32	ug/L			01/14/13 18:04	1
Chloroethane	ND		2.0	0.32	ug/L			01/14/13 18:04	1
Chloroform	ND		1.0	0.34	ug/L			01/14/13 18:04	1
Chloromethane	ND		2.0	0.35	ug/L			01/14/13 18:04	1
cis-1,3-Dichloropropene	ND		0.40	0.36	ug/L			01/14/13 18:04	1
Dichlorobromomethane	ND		0.50	0.39	ug/L			01/14/13 18:04	1
Dichlorodifluoromethane	ND		1.0	0.68	ug/L			01/14/13 18:04	1
Ethyl ether	ND		1.0	0.72	ug/L			01/14/13 18:04	1
Ethylbenzene	ND		1.0	0.74	ug/L			01/14/13 18:04	1
Ethylene Dibromide	ND		1.0	0.73	ug/L			01/14/13 18:04	1
Hexachlorobutadiene	ND		0.40	0.28	ug/L			01/14/13 18:04	1
Isopropyl ether	ND		10	0.59	ug/L			01/14/13 18:04	1
Isopropylbenzene	ND		1.0	0.79	ug/L			01/14/13 18:04	1
Methyl tert-butyl ether	ND		1.0	0.16	ug/L			01/14/13 18:04	1
Methylene Chloride	ND		1.0	0.44	ug/L			01/14/13 18:04	1
m-Xylene & p-Xylene	ND		2.0	0.66	ug/L			01/14/13 18:04	1
Naphthalene	ND		5.0	0.43	ug/L			01/14/13 18:04	1
n-Butylbenzene	ND		1.0	0.64	ug/L			01/14/13 18:04	1
N-Propylbenzene	ND		1.0	0.69	ug/L			01/14/13 18:04	1
o-Xylene	ND		1.0	0.76	ug/L			01/14/13 18:04	1
sec-Butylbenzene	ND		1.0	0.75	ug/L			01/14/13 18:04	1
Styrene	ND		1.0	0.73	ug/L			01/14/13 18:04	1
Tert-amyl methyl ether	ND		5.0	0.27	ug/L			01/14/13 18:04	1
Tert-butyl ethyl ether	ND		5.0	0.29	ug/L			01/14/13 18:04	1
tert-Butylbenzene	ND		1.0	0.81	ug/L			01/14/13 18:04	1
Tetrachloroethene	**12**		1.0	0.36	ug/L			01/14/13 18:04	1
Tetrahydrofuran	ND		10	1.3	ug/L			01/14/13 18:04	1
Toluene	ND		1.0	0.51	ug/L			01/14/13 18:04	1
trans-1,2-Dichloroethene	**2.2**		1.0	0.90	ug/L			01/14/13 18:04	1
trans-1,3-Dichloropropene	ND		0.40	0.37	ug/L			01/14/13 18:04	1
Trichlorofluoromethane	ND		1.0	0.88	ug/L			01/14/13 18:04	1
Dibromomethane	ND		1.0	0.41	ug/L			01/14/13 18:04	1

Surrogate	*%Recovery*	*Qualifier*	*Limits*	*Prepared*	*Analyzed*	*Dil Fac*
Toluene-d8 (Surr)	*101*		*70 - 130*		*01/14/13 18:04*	*1*
1,2-Dichloroethane-d4 (Surr)	*101*		*70 - 130*		*01/14/13 18:04*	*1*
4-Bromofluorobenzene (Surr)	*91*		*70 - 130*		*01/14/13 18:04*	*1*

Client Sample ID: REW-7-20130110-01

Lab Sample ID: 480-31428-3

Date Collected: 01/10/13 11:10

Matrix: Water

Date Received: 01/11/13 08:00

Method: 8260C - Volatile Organic Compounds (GC/MS) - DL

Analyte	Result	Qualifier	RL	MDL	Unit	D	Prepared	Analyzed	Dil Fac
cis-1,2-Dichloroethene	**1000**		20	16	ug/L			01/15/13 15:22	20
Trichloroethene	**350**		20	9.2	ug/L			01/15/13 15:22	20
Vinyl chloride	**140**		10	18	ug/L			01/15/13 15:22	20

Surrogate	*%Recovery*	*Qualifier*	*Limits*	*Prepared*	*Analyzed*	*Dil Fac*
Toluene-d8 (Surr)	*95*		*70 - 130*		*01/15/13 15:22*	*20*
1,2-Dichloroethane-d4 (Surr)	*99*		*70 - 130*		*01/15/13 15:22*	*20*
4-Bromofluorobenzene (Surr)	*90*		*70 - 130*		*01/15/13 15:22*	*20*

Client Sample ID: REW-8-20130110-01

Lab Sample ID: 480-31428-4

Date Collected: 01/10/13 12:30

Matrix: Water

Date Received: 01/11/13 08:00

Method: 8260C - Volatile Organic Compounds (GC/MS)

Analyte	Result	Qualifier	RL	MDL	Unit	D	Prepared	Analyzed	Dil Fac
1,1,1,2-Tetrachloroethane	ND		1.0	0.35	ug/L			01/14/13 18:29	1
1,1,1-Trichloroethane	ND		1.0	0.82	ug/L			01/14/13 18:29	1
1,1,2,2-Tetrachloroethane	ND		0.50	0.21	ug/L			01/14/13 18:29	1
1,1,2-Trichloroethane	ND		1.0	0.23	ug/L			01/14/13 18:29	1
1,1-Dichloroethane	**1.9**		1.0	0.38	ug/L			01/14/13 18:29	1
1,1-Dichloroethene	**1.3**		1.0	0.29	ug/L			01/14/13 18:29	1
1,1-Dichloropropene	ND		1.0	0.72	ug/L			01/14/13 18:29	1
1,2,3-Trichlorobenzene	ND		1.0	0.41	ug/L			01/14/13 18:29	1
1,2,3-Trichloropropane	ND		1.0	0.89	ug/L			01/14/13 18:29	1
1,2,4-Trichlorobenzene	ND		1.0	0.41	ug/L			01/14/13 18:29	1
1,2,4-Trimethylbenzene	ND		1.0	0.75	ug/L			01/14/13 18:29	1
1,2-Dibromo-3-Chloropropane	ND		5.0	0.39	ug/L			01/14/13 18:29	1
1,2-Dichlorobenzene	ND		1.0	0.79	ug/L			01/14/13 18:29	1
1,2-Dichloroethane	ND		1.0	0.21	ug/L			01/14/13 18:29	1
1,2-Dichloropropane	ND		1.0	0.72	ug/L			01/14/13 18:29	1
1,3,5-Trimethylbenzene	ND		1.0	0.77	ug/L			01/14/13 18:29	1
1,3-Dichlorobenzene	ND		1.0	0.78	ug/L			01/14/13 18:29	1
1,3-Dichloropropane	ND		1.0	0.75	ug/L			01/14/13 18:29	1
1,4-Dichlorobenzene	ND		1.0	0.84	ug/L			01/14/13 18:29	1
1,4-Dioxane	ND		50	9.3	ug/L			01/14/13 18:29	1
2,2-Dichloropropane	ND		1.0	0.40	ug/L			01/14/13 18:29	1
2-Butanone (MEK)	ND	*	10	1.3	ug/L			01/14/13 18:29	1
2-Chlorotoluene	ND		1.0	0.86	ug/L			01/14/13 18:29	1
2-Hexanone	ND		10	1.2	ug/L			01/14/13 18:29	1
4-Chlorotoluene	ND		1.0	0.84	ug/L			01/14/13 18:29	1
4-Isopropyltoluene	ND		1.0	0.31	ug/L			01/14/13 18:29	1
4-Methyl-2-pentanone (MIBK)	ND		10	2.1	ug/L			01/14/13 18:29	1
Acetone	ND		50	3.0	ug/L			01/14/13 18:29	1
Benzene	**1.0**		1.0	0.41	ug/L			01/14/13 18:29	1
Bromobenzene	ND		1.0	0.80	ug/L			01/14/13 18:29	1
Bromoform	ND		1.0	0.26	ug/L			01/14/13 18:29	1
Bromomethane	ND		2.0	0.69	ug/L			01/14/13 18:29	1
Carbon disulfide	ND		10	0.19	ug/L			01/14/13 18:29	1
Carbon tetrachloride	ND		1.0	0.27	ug/L			01/14/13 18:29	1
Chlorobenzene	ND		1.0	0.75	ug/L			01/14/13 18:29	1

Client Sample ID: REW-8-20130110-01
Date Collected: 01/10/13 12:30
Date Received: 01/11/13 08:00

Lab Sample ID: 480-31428-4
Matrix: Water

Method: 8260C - Volatile Organic Compounds (GC/MS) (Continued)

Analyte	Result	Qualifier	RL	MDL	Unit	D	Prepared	Analyzed	Dil Fac
Chlorobromomethane	ND		1.0	0.87	ug/L			01/14/13 18:29	1
Chlorodibromomethane	ND		0.50	0.32	ug/L			01/14/13 18:29	1
Chloroethane	ND		2.0	0.32	ug/L			01/14/13 18:29	1
Chloroform	ND		1.0	0.34	ug/L			01/14/13 18:29	1
Chloromethane	ND		2.0	0.35	ug/L			01/14/13 18:29	1
cis-1,3-Dichloropropene	ND		0.40	0.36	ug/L			01/14/13 18:29	1
Dichlorobromomethane	ND		0.50	0.39	ug/L			01/14/13 18:29	1
Dichlorodifluoromethane	ND		1.0	0.68	ug/L			01/14/13 18:29	1
Ethyl ether	ND		1.0	0.72	ug/L			01/14/13 18:29	1
Ethylbenzene	ND		1.0	0.74	ug/L			01/14/13 18:29	1
Ethylene Dibromide	ND		1.0	0.73	ug/L			01/14/13 18:29	1
Hexachlorobutadiene	ND		0.40	0.28	ug/L			01/14/13 18:29	1
Isopropyl ether	ND		10	0.59	ug/L			01/14/13 18:29	1
Isopropylbenzene	ND		1.0	0.79	ug/L			01/14/13 18:29	1
Methyl tert-butyl ether	ND		1.0	0.16	ug/L			01/14/13 18:29	1
Methylene Chloride	ND		1.0	0.44	ug/L			01/14/13 18:29	1
m-Xylene & p-Xylene	ND		2.0	0.66	ug/L			01/14/13 18:29	1
Naphthalene	ND		5.0	0.43	ug/L			01/14/13 18:29	1
n-Butylbenzene	ND		1.0	0.64	ug/L			01/14/13 18:29	1
N-Propylbenzene	ND		1.0	0.69	ug/L			01/14/13 18:29	1
o-Xylene	ND		1.0	0.76	ug/L			01/14/13 18:29	1
sec-Butylbenzene	ND		1.0	0.75	ug/L			01/14/13 18:29	1
Styrene	ND		1.0	0.73	ug/L			01/14/13 18:29	1
Tert-amyl methyl ether	ND		5.0	0.27	ug/L			01/14/13 18:29	1
Tert-butyl ethyl ether	ND		5.0	0.29	ug/L			01/14/13 18:29	1
tert-Butylbenzene	ND		1.0	0.81	ug/L			01/14/13 18:29	1
Tetrachloroethene	**7.5**		1.0	0.36	ug/L			01/14/13 18:29	1
Tetrahydrofuran	**1.3**	**J**	10	1.3	ug/L			01/14/13 18:29	1
Toluene	ND		1.0	0.51	ug/L			01/14/13 18:29	1
trans-1,2-Dichloroethene	**11**		1.0	0.90	ug/L			01/14/13 18:29	1
trans-1,3-Dichloropropene	ND		0.40	0.37	ug/L			01/14/13 18:29	1
Trichlorofluoromethane	ND		1.0	0.88	ug/L			01/14/13 18:29	1
Vinyl chloride	**44**		0.50	0.90	ug/L			01/14/13 18:29	1
Dibromomethane	ND		1.0	0.41	ug/L			01/14/13 18:29	1

Surrogate	*%Recovery*	*Qualifier*	*Limits*	*Prepared*	*Analyzed*	*Dil Fac*
Toluene-d8 (Surr)	*98*		*70 - 130*		*01/14/13 18:29*	*1*
1,2-Dichloroethane-d4 (Surr)	*102*		*70 - 130*		*01/14/13 18:29*	*1*
4-Bromofluorobenzene (Surr)	*93*		*70 - 130*		*01/14/13 18:29*	*1*

Method: 8260C - Volatile Organic Compounds (GC/MS) - DL

Analyte	Result	Qualifier	RL	MDL	Unit	D	Prepared	Analyzed	Dil Fac
cis-1,2-Dichloroethene	**370**		5.0	4.1	ug/L			01/15/13 15:47	5
Trichloroethene	**340**		5.0	2.3	ug/L			01/15/13 15:47	5

Surrogate	*%Recovery*	*Qualifier*	*Limits*	*Prepared*	*Analyzed*	*Dil Fac*
Toluene-d8 (Surr)	*97*		*70 - 130*		*01/15/13 15:47*	*5*
1,2-Dichloroethane-d4 (Surr)	*100*		*70 - 130*		*01/15/13 15:47*	*5*
4-Bromofluorobenzene (Surr)	*92*		*70 - 130*		*01/15/13 15:47*	*5*

Client Sample Results

Client: Innovative Engineering Solutions, Inc
Project/Site: IDS Wayland

TestAmerica Job ID: 480-31428-1

Client Sample ID: REW-12-20130110-01

Lab Sample ID: 480-31428-5

Date Collected: 01/10/13 08:55
Matrix: Water
Date Received: 01/11/13 08:00

Method: 8260C - Volatile Organic Compounds (GC/MS)

Analyte	Result	Qualifier	RL	MDL	Unit	D	Prepared	Analyzed	Dil Fac
1,1,1,2-Tetrachloroethane	ND		1.0	0.35	ug/L			01/14/13 18:54	1
1,1,1-Trichloroethane	ND		1.0	0.82	ug/L			01/14/13 18:54	1
1,1,2,2-Tetrachloroethane	ND		0.50	0.21	ug/L			01/14/13 18:54	1
1,1,2-Trichloroethane	ND		1.0	0.23	ug/L			01/14/13 18:54	1
1,1-Dichloroethane	**1.2**		1.0	0.38	ug/L			01/14/13 18:54	1
1,1-Dichloroethene	**0.50**	**J**	1.0	0.29	ug/L			01/14/13 18:54	1
1,1-Dichloropropene	ND		1.0	0.72	ug/L			01/14/13 18:54	1
1,2,3-Trichlorobenzene	ND		1.0	0.41	ug/L			01/14/13 18:54	1
1,2,3-Trichloropropane	ND		1.0	0.89	ug/L			01/14/13 18:54	1
1,2,4-Trichlorobenzene	ND		1.0	0.41	ug/L			01/14/13 18:54	1
1,2,4-Trimethylbenzene	ND		1.0	0.75	ug/L			01/14/13 18:54	1
1,2-Dibromo-3-Chloropropane	ND		5.0	0.39	ug/L			01/14/13 18:54	1
1,2-Dichlorobenzene	ND		1.0	0.79	ug/L			01/14/13 18:54	1
1,2-Dichloroethane	ND		1.0	0.21	ug/L			01/14/13 18:54	1
1,2-Dichloropropane	ND		1.0	0.72	ug/L			01/14/13 18:54	1
1,3,5-Trimethylbenzene	ND		1.0	0.77	ug/L			01/14/13 18:54	1
1,3-Dichlorobenzene	ND		1.0	0.78	ug/L			01/14/13 18:54	1
1,3-Dichloropropane	ND		1.0	0.75	ug/L			01/14/13 18:54	1
1,4-Dichlorobenzene	ND		1.0	0.84	ug/L			01/14/13 18:54	1
1,4-Dioxane	ND		50	9.3	ug/L			01/14/13 18:54	1
2,2-Dichloropropane	ND		1.0	0.40	ug/L			01/14/13 18:54	1
2-Butanone (MEK)	ND	*	10	1.3	ug/L			01/14/13 18:54	1
2-Chlorotoluene	ND		1.0	0.86	ug/L			01/14/13 18:54	1
2-Hexanone	ND		10	1.2	ug/L			01/14/13 18:54	1
4-Chlorotoluene	ND		1.0	0.84	ug/L			01/14/13 18:54	1
4-Isopropyltoluene	ND		1.0	0.31	ug/L			01/14/13 18:54	1
4-Methyl-2-pentanone (MIBK)	ND		10	2.1	ug/L			01/14/13 18:54	1
Acetone	ND		50	3.0	ug/L			01/14/13 18:54	1
Benzene	**0.41**	**J**	1.0	0.41	ug/L			01/14/13 18:54	1
Bromobenzene	ND		1.0	0.80	ug/L			01/14/13 18:54	1
Bromoform	ND		1.0	0.26	ug/L			01/14/13 18:54	1
Bromomethane	ND		2.0	0.69	ug/L			01/14/13 18:54	1
Carbon disulfide	ND		10	0.19	ug/L			01/14/13 18:54	1
Carbon tetrachloride	ND		1.0	0.27	ug/L			01/14/13 18:54	1
Chlorobenzene	ND		1.0	0.75	ug/L			01/14/13 18:54	1
Chlorobromomethane	ND		1.0	0.87	ug/L			01/14/13 18:54	1
Chlorodibromomethane	ND		0.50	0.32	ug/L			01/14/13 18:54	1
Chloroethane	ND		2.0	0.32	ug/L			01/14/13 18:54	1
Chloroform	ND		1.0	0.34	ug/L			01/14/13 18:54	1
Chloromethane	ND		2.0	0.35	ug/L			01/14/13 18:54	1
cis-1,3-Dichloropropene	ND		0.40	0.36	ug/L			01/14/13 18:54	1
Dichlorobromomethane	ND		0.50	0.39	ug/L			01/14/13 18:54	1
Dichlorodifluoromethane	ND		1.0	0.68	ug/L			01/14/13 18:54	1
Ethyl ether	ND		1.0	0.72	ug/L			01/14/13 18:54	1
Ethylbenzene	ND		1.0	0.74	ug/L			01/14/13 18:54	1
Ethylene Dibromide	ND		1.0	0.73	ug/L			01/14/13 18:54	1
Hexachlorobutadiene	ND		0.40	0.28	ug/L			01/14/13 18:54	1
Isopropyl ether	ND		10	0.59	ug/L			01/14/13 18:54	1
Isopropylbenzene	ND		1.0	0.79	ug/L			01/14/13 18:54	1

Client Sample ID: REW-12-20130110-01

Lab Sample ID: 480-31428-5

Date Collected: 01/10/13 08:55

Matrix: Water

Date Received: 01/11/13 08:00

Method: 8260C - Volatile Organic Compounds (GC/MS) (Continued)

Analyte	Result	Qualifier	RL	MDL	Unit	D	Prepared	Analyzed	Dil Fac
Methyl tert-butyl ether	ND		1.0	0.16	ug/L			01/14/13 18:54	1
Methylene Chloride	ND		1.0	0.44	ug/L			01/14/13 18:54	1
m-Xylene & p-Xylene	ND		2.0	0.66	ug/L			01/14/13 18:54	1
Naphthalene	ND		5.0	0.43	ug/L			01/14/13 18:54	1
n-Butylbenzene	ND		1.0	0.64	ug/L			01/14/13 18:54	1
N-Propylbenzene	ND		1.0	0.69	ug/L			01/14/13 18:54	1
o-Xylene	ND		1.0	0.76	ug/L			01/14/13 18:54	1
sec-Butylbenzene	ND		1.0	0.75	ug/L			01/14/13 18:54	1
Styrene	ND		1.0	0.73	ug/L			01/14/13 18:54	1
Tert-amyl methyl ether	ND		5.0	0.27	ug/L			01/14/13 18:54	1
Tert-butyl ethyl ether	ND		5.0	0.29	ug/L			01/14/13 18:54	1
tert-Butylbenzene	ND		1.0	0.81	ug/L			01/14/13 18:54	1
Tetrachloroethene	**9.8**		1.0	0.36	ug/L			01/14/13 18:54	1
Tetrahydrofuran	ND		10	1.3	ug/L			01/14/13 18:54	1
Toluene	ND		1.0	0.51	ug/L			01/14/13 18:54	1
trans-1,2-Dichloroethene	ND		1.0	0.90	ug/L			01/14/13 18:54	1
trans-1,3-Dichloropropene	ND		0.40	0.37	ug/L			01/14/13 18:54	1
Trichlorofluoromethane	ND		1.0	0.88	ug/L			01/14/13 18:54	1
Vinyl chloride	**14**		0.50	0.90	ug/L			01/14/13 18:54	1
Dibromomethane	ND		1.0	0.41	ug/L			01/14/13 18:54	1

Surrogate	*%Recovery*	*Qualifier*	*Limits*	*Prepared*	*Analyzed*	*Dil Fac*
Toluene-d8 (Surr)	*96*		*70 - 130*		*01/14/13 18:54*	*1*
1,2-Dichloroethane-d4 (Surr)	*99*		*70 - 130*		*01/14/13 18:54*	*1*
4-Bromofluorobenzene (Surr)	*89*		*70 - 130*		*01/14/13 18:54*	*1*

Method: 8260C - Volatile Organic Compounds (GC/MS) - DL

Analyte	Result	Qualifier	RL	MDL	Unit	D	Prepared	Analyzed	Dil Fac
cis-1,2-Dichloroethene	**270**		4.0	3.2	ug/L			01/15/13 16:12	4
Trichloroethene	**200**		4.0	1.8	ug/L			01/15/13 16:12	4

Surrogate	*%Recovery*	*Qualifier*	*Limits*	*Prepared*	*Analyzed*	*Dil Fac*
Toluene-d8 (Surr)	*94*		*70 - 130*		*01/15/13 16:12*	*4*
1,2-Dichloroethane-d4 (Surr)	*98*		*70 - 130*		*01/15/13 16:12*	*4*
4-Bromofluorobenzene (Surr)	*86*		*70 - 130*		*01/15/13 16:12*	*4*

Client Sample ID: MW-261S-20130110-01

Lab Sample ID: 480-31428-6

Date Collected: 01/10/13 10:35

Matrix: Water

Date Received: 01/11/13 08:00

Method: 8260C - Volatile Organic Compounds (GC/MS)

Analyte	Result	Qualifier	RL	MDL	Unit	D	Prepared	Analyzed	Dil Fac
1,1,1,2-Tetrachloroethane	ND		5.0	1.8	ug/L			01/14/13 19:19	5
1,1,1-Trichloroethane	ND		5.0	4.1	ug/L			01/14/13 19:19	5
1,1,2,2-Tetrachloroethane	ND		2.5	1.1	ug/L			01/14/13 19:19	5
1,1,2-Trichloroethane	ND		5.0	1.2	ug/L			01/14/13 19:19	5
1,1-Dichloroethane	ND		5.0	1.9	ug/L			01/14/13 19:19	5
1,1-Dichloroethene	ND		5.0	1.5	ug/L			01/14/13 19:19	5
1,1-Dichloropropene	ND		5.0	3.6	ug/L			01/14/13 19:19	5
1,2,3-Trichlorobenzene	ND		5.0	2.1	ug/L			01/14/13 19:19	5

Client Sample ID: MW-261S-20130110-01
Date Collected: 01/10/13 10:35
Date Received: 01/11/13 08:00

Lab Sample ID: 480-31428-6
Matrix: Water

Method: 8260C - Volatile Organic Compounds (GC/MS) (Continued)

Analyte	Result	Qualifier	RL	MDL	Unit	D	Prepared	Analyzed	Dil Fac
1,2,3-Trichloropropane	ND		5.0	4.5	ug/L			01/14/13 19:19	5
1,2,4-Trichlorobenzene	ND		5.0	2.1	ug/L			01/14/13 19:19	5
1,2,4-Trimethylbenzene	ND		5.0	3.8	ug/L			01/14/13 19:19	5
1,2-Dibromo-3-Chloropropane	ND		25	2.0	ug/L			01/14/13 19:19	5
1,2-Dichlorobenzene	ND		5.0	4.0	ug/L			01/14/13 19:19	5
1,2-Dichloroethane	ND		5.0	1.1	ug/L			01/14/13 19:19	5
1,2-Dichloropropane	ND		5.0	3.6	ug/L			01/14/13 19:19	5
1,3,5-Trimethylbenzene	ND		5.0	3.9	ug/L			01/14/13 19:19	5
1,3-Dichlorobenzene	ND		5.0	3.9	ug/L			01/14/13 19:19	5
1,3-Dichloropropane	ND		5.0	3.8	ug/L			01/14/13 19:19	5
1,4-Dichlorobenzene	ND		5.0	4.2	ug/L			01/14/13 19:19	5
1,4-Dioxane	ND		250	47	ug/L			01/14/13 19:19	5
2,2-Dichloropropane	ND		5.0	2.0	ug/L			01/14/13 19:19	5
2-Butanone (MEK)	**140**	*	50	6.6	ug/L			01/14/13 19:19	5
2-Chlorotoluene	ND		5.0	4.3	ug/L			01/14/13 19:19	5
2-Hexanone	ND		50	6.2	ug/L			01/14/13 19:19	5
4-Chlorotoluene	ND		5.0	4.2	ug/L			01/14/13 19:19	5
4-Isopropyltoluene	ND		5.0	1.6	ug/L			01/14/13 19:19	5
4-Methyl-2-pentanone (MIBK)	ND		50	11	ug/L			01/14/13 19:19	5
Benzene	ND		5.0	2.1	ug/L			01/14/13 19:19	5
Bromobenzene	ND		5.0	4.0	ug/L			01/14/13 19:19	5
Bromoform	ND		5.0	1.3	ug/L			01/14/13 19:19	5
Bromomethane	ND		10	3.5	ug/L			01/14/13 19:19	5
Carbon disulfide	ND		50	0.95	ug/L			01/14/13 19:19	5
Carbon tetrachloride	ND		5.0	1.4	ug/L			01/14/13 19:19	5
Chlorobenzene	ND		5.0	3.8	ug/L			01/14/13 19:19	5
Chlorobromomethane	ND		5.0	4.4	ug/L			01/14/13 19:19	5
Chlorodibromomethane	ND		2.5	1.6	ug/L			01/14/13 19:19	5
Chloroethane	ND		10	1.6	ug/L			01/14/13 19:19	5
Chloroform	ND		5.0	1.7	ug/L			01/14/13 19:19	5
Chloromethane	ND		10	1.8	ug/L			01/14/13 19:19	5
cis-1,2-Dichloroethene	**30**		5.0	4.1	ug/L			01/14/13 19:19	5
cis-1,3-Dichloropropene	ND		2.0	1.8	ug/L			01/14/13 19:19	5
Dichlorobromomethane	ND		2.5	2.0	ug/L			01/14/13 19:19	5
Dichlorodifluoromethane	ND		5.0	3.4	ug/L			01/14/13 19:19	5
Ethyl ether	ND		5.0	3.6	ug/L			01/14/13 19:19	5
Ethylbenzene	ND		5.0	3.7	ug/L			01/14/13 19:19	5
Ethylene Dibromide	ND		5.0	3.7	ug/L			01/14/13 19:19	5
Hexachlorobutadiene	ND		2.0	1.4	ug/L			01/14/13 19:19	5
Isopropyl ether	ND		50	3.0	ug/L			01/14/13 19:19	5
Isopropylbenzene	ND		5.0	4.0	ug/L			01/14/13 19:19	5
Methyl tert-butyl ether	ND		5.0	0.80	ug/L			01/14/13 19:19	5
Methylene Chloride	ND		5.0	2.2	ug/L			01/14/13 19:19	5
m-Xylene & p-Xylene	ND		10	3.3	ug/L			01/14/13 19:19	5
Naphthalene	ND		25	2.2	ug/L			01/14/13 19:19	5
n-Butylbenzene	ND		5.0	3.2	ug/L			01/14/13 19:19	5
N-Propylbenzene	ND		5.0	3.5	ug/L			01/14/13 19:19	5
o-Xylene	ND		5.0	3.8	ug/L			01/14/13 19:19	5
sec-Butylbenzene	ND		5.0	3.8	ug/L			01/14/13 19:19	5

Client Sample ID: MW-261S-20130110-01

Lab Sample ID: 480-31428-6

Date Collected: 01/10/13 10:35

Matrix: Water

Date Received: 01/11/13 08:00

Method: 8260C - Volatile Organic Compounds (GC/MS) (Continued)

Analyte	Result	Qualifier	RL	MDL	Unit	D	Prepared	Analyzed	Dil Fac
Styrene	ND		5.0	3.7	ug/L			01/14/13 19:19	5
Tert-amyl methyl ether	ND		25	1.4	ug/L			01/14/13 19:19	5
Tert-butyl ethyl ether	ND		25	1.5	ug/L			01/14/13 19:19	5
tert-Butylbenzene	ND		5.0	4.1	ug/L			01/14/13 19:19	5
Tetrachloroethene	ND		5.0	1.8	ug/L			01/14/13 19:19	5
Tetrahydrofuran	**10**	**J**	50	6.3	ug/L			01/14/13 19:19	5
Toluene	ND		5.0	2.6	ug/L			01/14/13 19:19	5
trans-1,2-Dichloroethene	ND		5.0	4.5	ug/L			01/14/13 19:19	5
trans-1,3-Dichloropropene	ND		2.0	1.9	ug/L			01/14/13 19:19	5
Trichloroethene	**6.3**		5.0	2.3	ug/L			01/14/13 19:19	5
Trichlorofluoromethane	ND		5.0	4.4	ug/L			01/14/13 19:19	5
Vinyl chloride	**78**		2.5	4.5	ug/L			01/14/13 19:19	5
Dibromomethane	ND		5.0	2.1	ug/L			01/14/13 19:19	5

Surrogate	*%Recovery*	*Qualifier*	*Limits*	*Prepared*	*Analyzed*	*Dil Fac*
Toluene-d8 (Surr)	*98*		*70 - 130*		*01/14/13 19:19*	*5*
1,2-Dichloroethane-d4 (Surr)	*103*		*70 - 130*		*01/14/13 19:19*	*5*
4-Bromofluorobenzene (Surr)	*91*		*70 - 130*		*01/14/13 19:19*	*5*

Method: 8260C - Volatile Organic Compounds (GC/MS) - DL

Analyte	Result	Qualifier	RL	MDL	Unit	D	Prepared	Analyzed	Dil Fac
Acetone	**170000**		20000	1200	ug/L			01/15/13 16:37	400

Surrogate	*%Recovery*	*Qualifier*	*Limits*	*Prepared*	*Analyzed*	*Dil Fac*
Toluene-d8 (Surr)	*95*		*70 - 130*		*01/15/13 16:37*	*400*
1,2-Dichloroethane-d4 (Surr)	*103*		*70 - 130*		*01/15/13 16:37*	*400*
4-Bromofluorobenzene (Surr)	*89*		*70 - 130*		*01/15/13 16:37*	*400*

Client Sample ID: MW-265M-20130110-01

Lab Sample ID: 480-31428-7

Date Collected: 01/10/13 12:10

Matrix: Water

Date Received: 01/11/13 08:00

Method: 8260C - Volatile Organic Compounds (GC/MS) - DL

Analyte	Result	Qualifier	RL	MDL	Unit	D	Prepared	Analyzed	Dil Fac
1,1,1,2-Tetrachloroethane	ND		100	35	ug/L			01/15/13 17:02	100
1,1,1-Trichloroethane	ND		100	82	ug/L			01/15/13 17:02	100
1,1,2,2-Tetrachloroethane	ND		50	21	ug/L			01/15/13 17:02	100
1,1,2-Trichloroethane	ND		100	23	ug/L			01/15/13 17:02	100
1,1-Dichloroethane	ND		100	38	ug/L			01/15/13 17:02	100
1,1-Dichloroethene	ND		100	29	ug/L			01/15/13 17:02	100
1,1-Dichloropropene	ND		100	72	ug/L			01/15/13 17:02	100
1,2,3-Trichlorobenzene	ND		100	41	ug/L			01/15/13 17:02	100
1,2,3-Trichloropropane	ND		100	89	ug/L			01/15/13 17:02	100
1,2,4-Trichlorobenzene	ND		100	41	ug/L			01/15/13 17:02	100
1,2,4-Trimethylbenzene	ND		100	75	ug/L			01/15/13 17:02	100
1,2-Dibromo-3-Chloropropane	ND		500	39	ug/L			01/15/13 17:02	100
1,2-Dichlorobenzene	ND		100	79	ug/L			01/15/13 17:02	100
1,2-Dichloroethane	ND		100	21	ug/L			01/15/13 17:02	100
1,2-Dichloropropane	ND		100	72	ug/L			01/15/13 17:02	100
1,3,5-Trimethylbenzene	ND		100	77	ug/L			01/15/13 17:02	100

Client Sample ID: MW-265M-20130110-01
Date Collected: 01/10/13 12:10
Date Received: 01/11/13 08:00

Lab Sample ID: 480-31428-7
Matrix: Water

Method: 8260C - Volatile Organic Compounds (GC/MS) - DL (Continued)

Analyte	Result	Qualifier	RL	MDL	Unit	D	Prepared	Analyzed	Dil Fac
1,3-Dichlorobenzene	ND		100	78	ug/L			01/15/13 17:02	100
1,3-Dichloropropane	ND		100	75	ug/L			01/15/13 17:02	100
1,4-Dichlorobenzene	ND		100	84	ug/L			01/15/13 17:02	100
1,4-Dioxane	ND		5000	930	ug/L			01/15/13 17:02	100
2,2-Dichloropropane	ND		100	40	ug/L			01/15/13 17:02	100
2-Butanone (MEK)	ND	*	1000	130	ug/L			01/15/13 17:02	100
2-Chlorotoluene	ND		100	86	ug/L			01/15/13 17:02	100
2-Hexanone	ND		1000	120	ug/L			01/15/13 17:02	100
4-Chlorotoluene	ND		100	84	ug/L			01/15/13 17:02	100
4-Isopropyltoluene	ND		100	31	ug/L			01/15/13 17:02	100
4-Methyl-2-pentanone (MIBK)	ND		1000	210	ug/L			01/15/13 17:02	100
Acetone	**46000**		5000	300	ug/L			01/15/13 17:02	100
Benzene	ND		100	41	ug/L			01/15/13 17:02	100
Bromobenzene	ND		100	80	ug/L			01/15/13 17:02	100
Bromoform	ND		100	26	ug/L			01/15/13 17:02	100
Bromomethane	ND		200	69	ug/L			01/15/13 17:02	100
Carbon disulfide	ND		1000	19	ug/L			01/15/13 17:02	100
Carbon tetrachloride	ND		100	27	ug/L			01/15/13 17:02	100
Chlorobenzene	ND		100	75	ug/L			01/15/13 17:02	100
Chlorobromomethane	ND		100	87	ug/L			01/15/13 17:02	100
Chlorodibromomethane	ND		50	32	ug/L			01/15/13 17:02	100
Chloroethane	ND		200	32	ug/L			01/15/13 17:02	100
Chloroform	ND		100	34	ug/L			01/15/13 17:02	100
Chloromethane	ND		200	35	ug/L			01/15/13 17:02	100
cis-1,2-Dichloroethene	ND		100	81	ug/L			01/15/13 17:02	100
cis-1,3-Dichloropropene	ND		40	36	ug/L			01/15/13 17:02	100
Dichlorobromomethane	ND		50	39	ug/L			01/15/13 17:02	100
Dichlorodifluoromethane	ND		100	68	ug/L			01/15/13 17:02	100
Ethyl ether	ND		100	72	ug/L			01/15/13 17:02	100
Ethylbenzene	ND		100	74	ug/L			01/15/13 17:02	100
Ethylene Dibromide	ND		100	73	ug/L			01/15/13 17:02	100
Hexachlorobutadiene	ND		40	28	ug/L			01/15/13 17:02	100
Isopropyl ether	ND		1000	59	ug/L			01/15/13 17:02	100
Isopropylbenzene	ND		100	79	ug/L			01/15/13 17:02	100
Methyl tert-butyl ether	ND		100	16	ug/L			01/15/13 17:02	100
Methylene Chloride	ND		100	44	ug/L			01/15/13 17:02	100
m-Xylene & p-Xylene	ND		200	66	ug/L			01/15/13 17:02	100
Naphthalene	ND		500	43	ug/L			01/15/13 17:02	100
n-Butylbenzene	ND		100	64	ug/L			01/15/13 17:02	100
N-Propylbenzene	ND		100	69	ug/L			01/15/13 17:02	100
o-Xylene	ND		100	76	ug/L			01/15/13 17:02	100
sec-Butylbenzene	ND		100	75	ug/L			01/15/13 17:02	100
Styrene	ND		100	73	ug/L			01/15/13 17:02	100
Tert-amyl methyl ether	ND		500	27	ug/L			01/15/13 17:02	100
Tert-butyl ethyl ether	ND		500	29	ug/L			01/15/13 17:02	100
tert-Butylbenzene	ND		100	81	ug/L			01/15/13 17:02	100
Tetrachloroethene	ND		100	36	ug/L			01/15/13 17:02	100
Tetrahydrofuran	ND		1000	130	ug/L			01/15/13 17:02	100
Toluene	ND		100	51	ug/L			01/15/13 17:02	100

Client Sample ID: MW-265M-20130110-01

Lab Sample ID: 480-31428-7

Date Collected: 01/10/13 12:10

Matrix: Water

Date Received: 01/11/13 08:00

Method: 8260C - Volatile Organic Compounds (GC/MS) - DL (Continued)

Analyte	Result	Qualifier	RL	MDL	Unit	D	Prepared	Analyzed	Dil Fac
trans-1,2-Dichloroethene	ND		100	90	ug/L			01/15/13 17:02	100
trans-1,3-Dichloropropene	ND		40	37	ug/L			01/15/13 17:02	100
Trichloroethene	ND		100	46	ug/L			01/15/13 17:02	100
Trichlorofluoromethane	ND		100	88	ug/L			01/15/13 17:02	100
Vinyl chloride	ND		50	90	ug/L			01/15/13 17:02	100
Dibromomethane	ND		100	41	ug/L			01/15/13 17:02	100

Surrogate	*%Recovery*	*Qualifier*	*Limits*	*Prepared*	*Analyzed*	*Dil Fac*
Toluene-d8 (Surr)	*96*		*70 - 130*		*01/15/13 17:02*	*100*
1,2-Dichloroethane-d4 (Surr)	*100*		*70 - 130*		*01/15/13 17:02*	*100*
4-Bromofluorobenzene (Surr)	*90*		*70 - 130*		*01/15/13 17:02*	*100*

Client Sample ID: MW-552-20130110-01

Lab Sample ID: 480-31428-8

Date Collected: 01/10/13 09:45

Matrix: Water

Date Received: 01/11/13 08:00

Method: 8260C - Volatile Organic Compounds (GC/MS)

Analyte	Result	Qualifier	RL	MDL	Unit	D	Prepared	Analyzed	Dil Fac
1,1,1,2-Tetrachloroethane	ND		40	14	ug/L			01/15/13 17:27	40
1,1,1-Trichloroethane	ND		40	33	ug/L			01/15/13 17:27	40
1,1,2,2-Tetrachloroethane	ND		20	8.4	ug/L			01/15/13 17:27	40
1,1,2-Trichloroethane	ND		40	9.2	ug/L			01/15/13 17:27	40
1,1-Dichloroethane	ND		40	15	ug/L			01/15/13 17:27	40
1,1-Dichloroethene	ND		40	12	ug/L			01/15/13 17:27	40
1,1-Dichloropropene	ND		40	29	ug/L			01/15/13 17:27	40
1,2,3-Trichlorobenzene	ND		40	16	ug/L			01/15/13 17:27	40
1,2,3-Trichloropropane	ND		40	36	ug/L			01/15/13 17:27	40
1,2,4-Trichlorobenzene	ND		40	16	ug/L			01/15/13 17:27	40
1,2,4-Trimethylbenzene	ND		40	30	ug/L			01/15/13 17:27	40
1,2-Dibromo-3-Chloropropane	ND		200	16	ug/L			01/15/13 17:27	40
1,2-Dichlorobenzene	ND		40	32	ug/L			01/15/13 17:27	40
1,2-Dichloroethane	ND		40	8.4	ug/L			01/15/13 17:27	40
1,2-Dichloropropane	ND		40	29	ug/L			01/15/13 17:27	40
1,3,5-Trimethylbenzene	ND		40	31	ug/L			01/15/13 17:27	40
1,3-Dichlorobenzene	ND		40	31	ug/L			01/15/13 17:27	40
1,3-Dichloropropane	ND		40	30	ug/L			01/15/13 17:27	40
1,4-Dichlorobenzene	ND		40	34	ug/L			01/15/13 17:27	40
1,4-Dioxane	ND		2000	370	ug/L			01/15/13 17:27	40
2,2-Dichloropropane	ND		40	16	ug/L			01/15/13 17:27	40
2-Butanone (MEK)	ND	*	400	53	ug/L			01/15/13 17:27	40
2-Chlorotoluene	ND		40	34	ug/L			01/15/13 17:27	40
2-Hexanone	ND		400	50	ug/L			01/15/13 17:27	40
4-Chlorotoluene	ND		40	34	ug/L			01/15/13 17:27	40
4-Isopropyltoluene	ND		40	12	ug/L			01/15/13 17:27	40
4-Methyl-2-pentanone (MIBK)	ND		400	84	ug/L			01/15/13 17:27	40
Acetone	**18000**		2000	120	ug/L			01/15/13 17:27	40
Benzene	ND		40	16	ug/L			01/15/13 17:27	40
Bromobenzene	ND		40	32	ug/L			01/15/13 17:27	40
Bromoform	ND		40	10	ug/L			01/15/13 17:27	40
Bromomethane	ND		80	28	ug/L			01/15/13 17:27	40

Client Sample ID: MW-552-20130110-01
Date Collected: 01/10/13 09:45
Date Received: 01/11/13 08:00

Lab Sample ID: 480-31428-8
Matrix: Water

Method: 8260C - Volatile Organic Compounds (GC/MS) (Continued)

Analyte	Result	Qualifier	RL	MDL	Unit	D	Prepared	Analyzed	Dil Fac
Carbon disulfide	ND		400	7.6	ug/L			01/15/13 17:27	40
Carbon tetrachloride	ND		40	11	ug/L			01/15/13 17:27	40
Chlorobenzene	ND		40	30	ug/L			01/15/13 17:27	40
Chlorobromomethane	ND		40	35	ug/L			01/15/13 17:27	40
Chlorodibromomethane	ND		20	13	ug/L			01/15/13 17:27	40
Chloroethane	ND		80	13	ug/L			01/15/13 17:27	40
Chloroform	ND		40	14	ug/L			01/15/13 17:27	40
Chloromethane	ND		80	14	ug/L			01/15/13 17:27	40
cis-1,2-Dichloroethene	**1400**		40	32	ug/L			01/15/13 17:27	40
cis-1,3-Dichloropropene	ND		16	14	ug/L			01/15/13 17:27	40
Dichlorobromomethane	ND		20	16	ug/L			01/15/13 17:27	40
Dichlorodifluoromethane	ND		40	27	ug/L			01/15/13 17:27	40
Ethyl ether	ND		40	29	ug/L			01/15/13 17:27	40
Ethylbenzene	ND		40	30	ug/L			01/15/13 17:27	40
Ethylene Dibromide	ND		40	29	ug/L			01/15/13 17:27	40
Hexachlorobutadiene	ND		16	11	ug/L			01/15/13 17:27	40
Isopropyl ether	ND		400	24	ug/L			01/15/13 17:27	40
Isopropylbenzene	ND		40	32	ug/L			01/15/13 17:27	40
Methyl tert-butyl ether	ND		40	6.4	ug/L			01/15/13 17:27	40
Methylene Chloride	ND		40	18	ug/L			01/15/13 17:27	40
m-Xylene & p-Xylene	ND		80	26	ug/L			01/15/13 17:27	40
Naphthalene	ND		200	17	ug/L			01/15/13 17:27	40
n-Butylbenzene	ND		40	26	ug/L			01/15/13 17:27	40
N-Propylbenzene	ND		40	28	ug/L			01/15/13 17:27	40
o-Xylene	ND		40	30	ug/L			01/15/13 17:27	40
sec-Butylbenzene	ND		40	30	ug/L			01/15/13 17:27	40
Styrene	ND		40	29	ug/L			01/15/13 17:27	40
Tert-amyl methyl ether	ND		200	11	ug/L			01/15/13 17:27	40
Tert-butyl ethyl ether	ND		200	12	ug/L			01/15/13 17:27	40
tert-Butylbenzene	ND		40	32	ug/L			01/15/13 17:27	40
Tetrachloroethene	ND		40	14	ug/L			01/15/13 17:27	40
Tetrahydrofuran	ND		400	50	ug/L			01/15/13 17:27	40
Toluene	ND		40	20	ug/L			01/15/13 17:27	40
trans-1,2-Dichloroethene	ND		40	36	ug/L			01/15/13 17:27	40
trans-1,3-Dichloropropene	ND		16	15	ug/L			01/15/13 17:27	40
Trichloroethene	**71**		40	18	ug/L			01/15/13 17:27	40
Trichlorofluoromethane	ND		40	35	ug/L			01/15/13 17:27	40
Vinyl chloride	**160**		20	36	ug/L			01/15/13 17:27	40
Dibromomethane	ND		40	16	ug/L			01/15/13 17:27	40

Surrogate	*%Recovery*	*Qualifier*	*Limits*	*Prepared*	*Analyzed*	*Dil Fac*
Toluene-d8 (Surr)	*93*		*70 - 130*		*01/15/13 17:27*	*40*
1,2-Dichloroethane-d4 (Surr)	*100*		*70 - 130*		*01/15/13 17:27*	*40*
4-Bromofluorobenzene (Surr)	*88*		*70 - 130*		*01/15/13 17:27*	*40*

Client: Innovative Engineering Solutions, Inc
Project/Site: IDS Wayland

TestAmerica Job ID: 480-31428-1

Client Sample ID: MW-562-20130110-01
Date Collected: 01/10/13 11:25
Date Received: 01/11/13 08:00

Lab Sample ID: 480-31428-9
Matrix: Water

Method: 8260C - Volatile Organic Compounds (GC/MS)

Analyte	Result	Qualifier	RL	MDL	Unit	D	Prepared	Analyzed	Dil Fac
1,1,1,2-Tetrachloroethane	ND		40	14	ug/L			01/15/13 17:52	40
1,1,1-Trichloroethane	ND		40	33	ug/L			01/15/13 17:52	40
1,1,2,2-Tetrachloroethane	ND		20	8.4	ug/L			01/15/13 17:52	40
1,1,2-Trichloroethane	ND		40	9.2	ug/L			01/15/13 17:52	40
1,1-Dichloroethane	ND		40	15	ug/L			01/15/13 17:52	40
1,1-Dichloroethene	ND		40	12	ug/L			01/15/13 17:52	40
1,1-Dichloropropene	ND		40	29	ug/L			01/15/13 17:52	40
1,2,3-Trichlorobenzene	ND		40	16	ug/L			01/15/13 17:52	40
1,2,3-Trichloropropane	ND		40	36	ug/L			01/15/13 17:52	40
1,2,4-Trichlorobenzene	ND		40	16	ug/L			01/15/13 17:52	40
1,2,4-Trimethylbenzene	ND		40	30	ug/L			01/15/13 17:52	40
1,2-Dibromo-3-Chloropropane	ND		200	16	ug/L			01/15/13 17:52	40
1,2-Dichlorobenzene	ND		40	32	ug/L			01/15/13 17:52	40
1,2-Dichloroethane	ND		40	8.4	ug/L			01/15/13 17:52	40
1,2-Dichloropropane	ND		40	29	ug/L			01/15/13 17:52	40
1,3,5-Trimethylbenzene	ND		40	31	ug/L			01/15/13 17:52	40
1,3-Dichlorobenzene	ND		40	31	ug/L			01/15/13 17:52	40
1,3-Dichloropropane	ND		40	30	ug/L			01/15/13 17:52	40
1,4-Dichlorobenzene	ND		40	34	ug/L			01/15/13 17:52	40
1,4-Dioxane	ND		2000	370	ug/L			01/15/13 17:52	40
2,2-Dichloropropane	ND		40	16	ug/L			01/15/13 17:52	40
2-Butanone (MEK)	**120**	**J ***	400	53	ug/L			01/15/13 17:52	40
2-Chlorotoluene	ND		40	34	ug/L			01/15/13 17:52	40
2-Hexanone	ND		400	50	ug/L			01/15/13 17:52	40
4-Chlorotoluene	ND		40	34	ug/L			01/15/13 17:52	40
4-Isopropyltoluene	ND		40	12	ug/L			01/15/13 17:52	40
4-Methyl-2-pentanone (MIBK)	ND		400	84	ug/L			01/15/13 17:52	40
Acetone	**16000**		2000	120	ug/L			01/15/13 17:52	40
Benzene	ND		40	16	ug/L			01/15/13 17:52	40
Bromobenzene	ND		40	32	ug/L			01/15/13 17:52	40
Bromoform	ND		40	10	ug/L			01/15/13 17:52	40
Bromomethane	ND		80	28	ug/L			01/15/13 17:52	40
Carbon disulfide	ND		400	7.6	ug/L			01/15/13 17:52	40
Carbon tetrachloride	ND		40	11	ug/L			01/15/13 17:52	40
Chlorobenzene	ND		40	30	ug/L			01/15/13 17:52	40
Chlorobromomethane	ND		40	35	ug/L			01/15/13 17:52	40
Chlorodibromomethane	ND		20	13	ug/L			01/15/13 17:52	40
Chloroethane	ND		80	13	ug/L			01/15/13 17:52	40
Chloroform	ND		40	14	ug/L			01/15/13 17:52	40
Chloromethane	ND		80	14	ug/L			01/15/13 17:52	40
cis-1,2-Dichloroethene	ND		40	32	ug/L			01/15/13 17:52	40
cis-1,3-Dichloropropene	ND		16	14	ug/L			01/15/13 17:52	40
Dichlorobromomethane	ND		20	16	ug/L			01/15/13 17:52	40
Dichlorodifluoromethane	ND		40	27	ug/L			01/15/13 17:52	40
Ethyl ether	ND		40	29	ug/L			01/15/13 17:52	40
Ethylbenzene	ND		40	30	ug/L			01/15/13 17:52	40
Ethylene Dibromide	ND		40	29	ug/L			01/15/13 17:52	40
Hexachlorobutadiene	ND		16	11	ug/L			01/15/13 17:52	40
Isopropyl ether	ND		400	24	ug/L			01/15/13 17:52	40

Client Sample ID: MW-562-20130110-01

Lab Sample ID: 480-31428-9

Date Collected: 01/10/13 11:25

Matrix: Water

Date Received: 01/11/13 08:00

Method: 8260C - Volatile Organic Compounds (GC/MS) (Continued)

Analyte	Result	Qualifier	RL	MDL	Unit	D	Prepared	Analyzed	Dil Fac
Isopropylbenzene	ND		40	32	ug/L			01/15/13 17:52	40
Methyl tert-butyl ether	ND		40	6.4	ug/L			01/15/13 17:52	40
Methylene Chloride	ND		40	18	ug/L			01/15/13 17:52	40
m-Xylene & p-Xylene	ND		80	26	ug/L			01/15/13 17:52	40
Naphthalene	ND		200	17	ug/L			01/15/13 17:52	40
n-Butylbenzene	ND		40	26	ug/L			01/15/13 17:52	40
N-Propylbenzene	ND		40	28	ug/L			01/15/13 17:52	40
o-Xylene	ND		40	30	ug/L			01/15/13 17:52	40
sec-Butylbenzene	ND		40	30	ug/L			01/15/13 17:52	40
Styrene	ND		40	29	ug/L			01/15/13 17:52	40
Tert-amyl methyl ether	ND		200	11	ug/L			01/15/13 17:52	40
Tert-butyl ethyl ether	ND		200	12	ug/L			01/15/13 17:52	40
tert-Butylbenzene	ND		40	32	ug/L			01/15/13 17:52	40
Tetrachloroethene	ND		40	14	ug/L			01/15/13 17:52	40
Tetrahydrofuran	ND		400	50	ug/L			01/15/13 17:52	40
Toluene	ND		40	20	ug/L			01/15/13 17:52	40
trans-1,2-Dichloroethene	ND		40	36	ug/L			01/15/13 17:52	40
trans-1,3-Dichloropropene	ND		16	15	ug/L			01/15/13 17:52	40
Trichloroethene	ND		40	18	ug/L			01/15/13 17:52	40
Trichlorofluoromethane	ND		40	35	ug/L			01/15/13 17:52	40
Vinyl chloride	ND		20	36	ug/L			01/15/13 17:52	40
Dibromomethane	ND		40	16	ug/L			01/15/13 17:52	40

Surrogate	*%Recovery*	*Qualifier*	*Limits*	*Prepared*	*Analyzed*	*Dil Fac*
Toluene-d8 (Surr)	*93*		*70 - 130*		*01/15/13 17:52*	*40*
1,2-Dichloroethane-d4 (Surr)	*99*		*70 - 130*		*01/15/13 17:52*	*40*
4-Bromofluorobenzene (Surr)	*88*		*70 - 130*		*01/15/13 17:52*	*40*

Client Sample ID: MW-563-20130110-01

Lab Sample ID: 480-31428-10

Date Collected: 01/10/13 09:00

Matrix: Water

Date Received: 01/11/13 08:00

Method: 8260C - Volatile Organic Compounds (GC/MS)

Analyte	Result	Qualifier	RL	MDL	Unit	D	Prepared	Analyzed	Dil Fac
1,1,1,2-Tetrachloroethane	ND		5.0	1.8	ug/L			01/15/13 18:17	5
1,1,1-Trichloroethane	ND		5.0	4.1	ug/L			01/15/13 18:17	5
1,1,2,2-Tetrachloroethane	ND		2.5	1.1	ug/L			01/15/13 18:17	5
1,1,2-Trichloroethane	ND		5.0	1.2	ug/L			01/15/13 18:17	5
1,1-Dichloroethane	**3.4**	**J**	5.0	1.9	ug/L			01/15/13 18:17	5
1,1-Dichloroethene	**1.9**	**J**	5.0	1.5	ug/L			01/15/13 18:17	5
1,1-Dichloropropene	ND		5.0	3.6	ug/L			01/15/13 18:17	5
1,2,3-Trichlorobenzene	ND		5.0	2.1	ug/L			01/15/13 18:17	5
1,2,3-Trichloropropane	ND		5.0	4.5	ug/L			01/15/13 18:17	5
1,2,4-Trichlorobenzene	ND		5.0	2.1	ug/L			01/15/13 18:17	5
1,2,4-Trimethylbenzene	ND		5.0	3.8	ug/L			01/15/13 18:17	5
1,2-Dibromo-3-Chloropropane	ND		25	2.0	ug/L			01/15/13 18:17	5
1,2-Dichlorobenzene	ND		5.0	4.0	ug/L			01/15/13 18:17	5
1,2-Dichloroethane	ND		5.0	1.1	ug/L			01/15/13 18:17	5
1,2-Dichloropropane	ND		5.0	3.6	ug/L			01/15/13 18:17	5
1,3,5-Trimethylbenzene	ND		5.0	3.9	ug/L			01/15/13 18:17	5

Client Sample ID: MW-563-20130110-01
Date Collected: 01/10/13 09:00
Date Received: 01/11/13 08:00

Lab Sample ID: 480-31428-10
Matrix: Water

Method: 8260C - Volatile Organic Compounds (GC/MS) (Continued)

Analyte	Result	Qualifier	RL	MDL	Unit	D	Prepared	Analyzed	Dil Fac
1,3-Dichlorobenzene	ND		5.0	3.9	ug/L			01/15/13 18:17	5
1,3-Dichloropropane	ND		5.0	3.8	ug/L			01/15/13 18:17	5
1,4-Dichlorobenzene	ND		5.0	4.2	ug/L			01/15/13 18:17	5
1,4-Dioxane	ND		250	47	ug/L			01/15/13 18:17	5
2,2-Dichloropropane	ND		5.0	2.0	ug/L			01/15/13 18:17	5
2-Butanone (MEK)	ND	*	50	6.6	ug/L			01/15/13 18:17	5
2-Chlorotoluene	ND		5.0	4.3	ug/L			01/15/13 18:17	5
2-Hexanone	ND		50	6.2	ug/L			01/15/13 18:17	5
4-Chlorotoluene	ND		5.0	4.2	ug/L			01/15/13 18:17	5
4-Isopropyltoluene	ND		5.0	1.6	ug/L			01/15/13 18:17	5
4-Methyl-2-pentanone (MIBK)	ND		50	11	ug/L			01/15/13 18:17	5
Acetone	**61**	**J**	250	15	ug/L			01/15/13 18:17	5
Benzene	ND		5.0	2.1	ug/L			01/15/13 18:17	5
Bromobenzene	ND		5.0	4.0	ug/L			01/15/13 18:17	5
Bromoform	ND		5.0	1.3	ug/L			01/15/13 18:17	5
Bromomethane	ND		10	3.5	ug/L			01/15/13 18:17	5
Carbon disulfide	ND		50	0.95	ug/L			01/15/13 18:17	5
Carbon tetrachloride	ND		5.0	1.4	ug/L			01/15/13 18:17	5
Chlorobenzene	ND		5.0	3.8	ug/L			01/15/13 18:17	5
Chlorobromomethane	ND		5.0	4.4	ug/L			01/15/13 18:17	5
Chlorodibromomethane	ND		2.5	1.6	ug/L			01/15/13 18:17	5
Chloroethane	ND		10	1.6	ug/L			01/15/13 18:17	5
Chloroform	ND		5.0	1.7	ug/L			01/15/13 18:17	5
Chloromethane	ND		10	1.8	ug/L			01/15/13 18:17	5
cis-1,2-Dichloroethene	**380**		5.0	4.1	ug/L			01/15/13 18:17	5
cis-1,3-Dichloropropene	ND		2.0	1.8	ug/L			01/15/13 18:17	5
Dichlorobromomethane	ND		2.5	2.0	ug/L			01/15/13 18:17	5
Dichlorodifluoromethane	ND		5.0	3.4	ug/L			01/15/13 18:17	5
Ethyl ether	ND		5.0	3.6	ug/L			01/15/13 18:17	5
Ethylbenzene	ND		5.0	3.7	ug/L			01/15/13 18:17	5
Ethylene Dibromide	ND		5.0	3.7	ug/L			01/15/13 18:17	5
Hexachlorobutadiene	ND		2.0	1.4	ug/L			01/15/13 18:17	5
Isopropyl ether	ND		50	3.0	ug/L			01/15/13 18:17	5
Isopropylbenzene	ND		5.0	4.0	ug/L			01/15/13 18:17	5
Methyl tert-butyl ether	ND		5.0	0.80	ug/L			01/15/13 18:17	5
Methylene Chloride	ND		5.0	2.2	ug/L			01/15/13 18:17	5
m-Xylene & p-Xylene	ND		10	3.3	ug/L			01/15/13 18:17	5
Naphthalene	ND		25	2.2	ug/L			01/15/13 18:17	5
n-Butylbenzene	ND		5.0	3.2	ug/L			01/15/13 18:17	5
N-Propylbenzene	ND		5.0	3.5	ug/L			01/15/13 18:17	5
o-Xylene	ND		5.0	3.8	ug/L			01/15/13 18:17	5
sec-Butylbenzene	ND		5.0	3.8	ug/L			01/15/13 18:17	5
Styrene	ND		5.0	3.7	ug/L			01/15/13 18:17	5
Tert-amyl methyl ether	ND		25	1.4	ug/L			01/15/13 18:17	5
Tert-butyl ethyl ether	ND		25	1.5	ug/L			01/15/13 18:17	5
tert-Butylbenzene	ND		5.0	4.1	ug/L			01/15/13 18:17	5
Tetrachloroethene	**3.0**	**J**	5.0	1.8	ug/L			01/15/13 18:17	5
Tetrahydrofuran	ND		50	6.3	ug/L			01/15/13 18:17	5
Toluene	ND		5.0	2.6	ug/L			01/15/13 18:17	5

Client Sample ID: MW-563-20130110-01

Lab Sample ID: 480-31428-10

Date Collected: 01/10/13 09:00

Matrix: Water

Date Received: 01/11/13 08:00

Method: 8260C - Volatile Organic Compounds (GC/MS) (Continued)

Analyte	Result	Qualifier	RL	MDL	Unit	D	Prepared	Analyzed	Dil Fac
trans-1,2-Dichloroethene	ND		5.0	4.5	ug/L			01/15/13 18:17	5
trans-1,3-Dichloropropene	ND		2.0	1.9	ug/L			01/15/13 18:17	5
Trichloroethene	**150**		5.0	2.3	ug/L			01/15/13 18:17	5
Trichlorofluoromethane	ND		5.0	4.4	ug/L			01/15/13 18:17	5
Vinyl chloride	**47**		2.5	4.5	ug/L			01/15/13 18:17	5
Dibromomethane	ND		5.0	2.1	ug/L			01/15/13 18:17	5

Surrogate	*%Recovery*	*Qualifier*	*Limits*	*Prepared*	*Analyzed*	*Dil Fac*
Toluene-d8 (Surr)	*94*		*70 - 130*		*01/15/13 18:17*	*5*
1,2-Dichloroethane-d4 (Surr)	*100*		*70 - 130*		*01/15/13 18:17*	*5*
4-Bromofluorobenzene (Surr)	*87*		*70 - 130*		*01/15/13 18:17*	*5*

Client Sample ID: DUP-X-20130110-01

Lab Sample ID: 480-31428-11

Date Collected: 01/10/13 00:00

Matrix: Water

Date Received: 01/11/13 08:00

Method: 8260C - Volatile Organic Compounds (GC/MS)

Analyte	Result	Qualifier	RL	MDL	Unit	D	Prepared	Analyzed	Dil Fac
1,1,1,2-Tetrachloroethane	ND		1.0	0.35	ug/L			01/14/13 21:26	1
1,1,1-Trichloroethane	ND		1.0	0.82	ug/L			01/14/13 21:26	1
1,1,2,2-Tetrachloroethane	ND		0.50	0.21	ug/L			01/14/13 21:26	1
1,1,2-Trichloroethane	ND		1.0	0.23	ug/L			01/14/13 21:26	1
1,1-Dichloroethane	**1.3**		1.0	0.38	ug/L			01/14/13 21:26	1
1,1-Dichloroethene	**0.39**	**J**	1.0	0.29	ug/L			01/14/13 21:26	1
1,1-Dichloropropene	ND		1.0	0.72	ug/L			01/14/13 21:26	1
1,2,3-Trichlorobenzene	ND		1.0	0.41	ug/L			01/14/13 21:26	1
1,2,3-Trichloropropane	ND		1.0	0.89	ug/L			01/14/13 21:26	1
1,2,4-Trichlorobenzene	ND		1.0	0.41	ug/L			01/14/13 21:26	1
1,2,4-Trimethylbenzene	ND		1.0	0.75	ug/L			01/14/13 21:26	1
1,2-Dibromo-3-Chloropropane	ND		5.0	0.39	ug/L			01/14/13 21:26	1
1,2-Dichlorobenzene	ND		1.0	0.79	ug/L			01/14/13 21:26	1
1,2-Dichloroethane	ND		1.0	0.21	ug/L			01/14/13 21:26	1
1,2-Dichloropropane	ND		1.0	0.72	ug/L			01/14/13 21:26	1
1,3,5-Trimethylbenzene	ND		1.0	0.77	ug/L			01/14/13 21:26	1
1,3-Dichlorobenzene	ND		1.0	0.78	ug/L			01/14/13 21:26	1
1,3-Dichloropropane	ND		1.0	0.75	ug/L			01/14/13 21:26	1
1,4-Dichlorobenzene	ND		1.0	0.84	ug/L			01/14/13 21:26	1
1,4-Dioxane	ND		50	9.3	ug/L			01/14/13 21:26	1
2,2-Dichloropropane	ND		1.0	0.40	ug/L			01/14/13 21:26	1
2-Butanone (MEK)	ND	*	10	1.3	ug/L			01/14/13 21:26	1
2-Chlorotoluene	ND		1.0	0.86	ug/L			01/14/13 21:26	1
2-Hexanone	ND		10	1.2	ug/L			01/14/13 21:26	1
4-Chlorotoluene	ND		1.0	0.84	ug/L			01/14/13 21:26	1
4-Isopropyltoluene	ND		1.0	0.31	ug/L			01/14/13 21:26	1
4-Methyl-2-pentanone (MIBK)	ND		10	2.1	ug/L			01/14/13 21:26	1
Acetone	ND		50	3.0	ug/L			01/14/13 21:26	1
Benzene	**0.41**	**J**	1.0	0.41	ug/L			01/14/13 21:26	1
Bromobenzene	ND		1.0	0.80	ug/L			01/14/13 21:26	1
Bromoform	ND		1.0	0.26	ug/L			01/14/13 21:26	1
Bromomethane	ND		2.0	0.69	ug/L			01/14/13 21:26	1

Client Sample ID: DUP-X-20130110-01

Lab Sample ID: 480-31428-11

Date Collected: 01/10/13 00:00

Matrix: Water

Date Received: 01/11/13 08:00

Method: 8260C - Volatile Organic Compounds (GC/MS) (Continued)

Analyte	Result	Qualifier	RL	MDL	Unit	D	Prepared	Analyzed	Dil Fac
Carbon disulfide	ND		10	0.19	ug/L			01/14/13 21:26	1
Carbon tetrachloride	ND		1.0	0.27	ug/L			01/14/13 21:26	1
Chlorobenzene	ND		1.0	0.75	ug/L			01/14/13 21:26	1
Chlorobromomethane	ND		1.0	0.87	ug/L			01/14/13 21:26	1
Chlorodibromomethane	ND		0.50	0.32	ug/L			01/14/13 21:26	1
Chloroethane	ND		2.0	0.32	ug/L			01/14/13 21:26	1
Chloroform	ND		1.0	0.34	ug/L			01/14/13 21:26	1
Chloromethane	ND		2.0	0.35	ug/L			01/14/13 21:26	1
cis-1,3-Dichloropropene	ND		0.40	0.36	ug/L			01/14/13 21:26	1
Dichlorobromomethane	ND		0.50	0.39	ug/L			01/14/13 21:26	1
Dichlorodifluoromethane	ND		1.0	0.68	ug/L			01/14/13 21:26	1
Ethyl ether	ND		1.0	0.72	ug/L			01/14/13 21:26	1
Ethylbenzene	ND		1.0	0.74	ug/L			01/14/13 21:26	1
Ethylene Dibromide	ND		1.0	0.73	ug/L			01/14/13 21:26	1
Hexachlorobutadiene	ND		0.40	0.28	ug/L			01/14/13 21:26	1
Isopropyl ether	ND		10	0.59	ug/L			01/14/13 21:26	1
Isopropylbenzene	ND		1.0	0.79	ug/L			01/14/13 21:26	1
Methyl tert-butyl ether	ND		1.0	0.16	ug/L			01/14/13 21:26	1
Methylene Chloride	ND		1.0	0.44	ug/L			01/14/13 21:26	1
m-Xylene & p-Xylene	ND		2.0	0.66	ug/L			01/14/13 21:26	1
Naphthalene	ND		5.0	0.43	ug/L			01/14/13 21:26	1
n-Butylbenzene	ND		1.0	0.64	ug/L			01/14/13 21:26	1
N-Propylbenzene	ND		1.0	0.69	ug/L			01/14/13 21:26	1
o-Xylene	ND		1.0	0.76	ug/L			01/14/13 21:26	1
sec-Butylbenzene	ND		1.0	0.75	ug/L			01/14/13 21:26	1
Styrene	ND		1.0	0.73	ug/L			01/14/13 21:26	1
Tert-amyl methyl ether	ND		5.0	0.27	ug/L			01/14/13 21:26	1
Tert-butyl ethyl ether	ND		5.0	0.29	ug/L			01/14/13 21:26	1
tert-Butylbenzene	ND		1.0	0.81	ug/L			01/14/13 21:26	1
Tetrachloroethene	**9.5**		1.0	0.36	ug/L			01/14/13 21:26	1
Tetrahydrofuran	ND		10	1.3	ug/L			01/14/13 21:26	1
Toluene	ND		1.0	0.51	ug/L			01/14/13 21:26	1
trans-1,2-Dichloroethene	ND		1.0	0.90	ug/L			01/14/13 21:26	1
trans-1,3-Dichloropropene	ND		0.40	0.37	ug/L			01/14/13 21:26	1
Trichlorofluoromethane	ND		1.0	0.88	ug/L			01/14/13 21:26	1
Vinyl chloride	**14**		0.50	0.90	ug/L			01/14/13 21:26	1
Dibromomethane	ND		1.0	0.41	ug/L			01/14/13 21:26	1

Surrogate	*%Recovery*	*Qualifier*	*Limits*	*Prepared*	*Analyzed*	*Dil Fac*
Toluene-d8 (Surr)	*97*		*70 - 130*		*01/14/13 21:26*	*1*
1,2-Dichloroethane-d4 (Surr)	*100*		*70 - 130*		*01/14/13 21:26*	*1*
4-Bromofluorobenzene (Surr)	*91*		*70 - 130*		*01/14/13 21:26*	*1*

Method: 8260C - Volatile Organic Compounds (GC/MS) - DL

Analyte	Result	Qualifier	RL	MDL	Unit	D	Prepared	Analyzed	Dil Fac
cis-1,2-Dichloroethene	**260**		4.0	3.2	ug/L			01/15/13 18:43	4
Trichloroethene	**200**		4.0	1.8	ug/L			01/15/13 18:43	4

Surrogate	*%Recovery*	*Qualifier*	*Limits*	*Prepared*	*Analyzed*	*Dil Fac*
Toluene-d8 (Surr)	*94*		*70 - 130*		*01/15/13 18:43*	*4*

Client Sample ID: DUP-X-20130110-01

Lab Sample ID: 480-31428-11

Date Collected: 01/10/13 00:00

Matrix: Water

Date Received: 01/11/13 08:00

Method: 8260C - Volatile Organic Compounds (GC/MS) - DL (Continued)

Surrogate	%Recovery	Qualifier	Limits	Prepared	Analyzed	Dil Fac
1,2-Dichloroethane-d4 (Surr)	98		70 - 130		01/15/13 18:43	4
4-Bromofluorobenzene (Surr)	88		70 - 130		01/15/13 18:43	4

Client Sample ID: Trip Blanks

Lab Sample ID: 480-31428-12

Date Collected: 01/10/13 00:00

Matrix: Water

Date Received: 01/11/13 08:00

Method: 8260C - Volatile Organic Compounds (GC/MS)

Analyte	Result	Qualifier	RL	MDL	Unit	D	Prepared	Analyzed	Dil Fac
1,1,1,2-Tetrachloroethane	ND		1.0	0.35	ug/L			01/15/13 19:08	1
1,1,1-Trichloroethane	ND		1.0	0.82	ug/L			01/15/13 19:08	1
1,1,2,2-Tetrachloroethane	ND		0.50	0.21	ug/L			01/15/13 19:08	1
1,1,2-Trichloroethane	ND		1.0	0.23	ug/L			01/15/13 19:08	1
1,1-Dichloroethane	ND		1.0	0.38	ug/L			01/15/13 19:08	1
1,1-Dichloroethene	ND		1.0	0.29	ug/L			01/15/13 19:08	1
1,1-Dichloropropene	ND		1.0	0.72	ug/L			01/15/13 19:08	1
1,2,3-Trichlorobenzene	ND		1.0	0.41	ug/L			01/15/13 19:08	1
1,2,3-Trichloropropane	ND		1.0	0.89	ug/L			01/15/13 19:08	1
1,2,4-Trichlorobenzene	ND		1.0	0.41	ug/L			01/15/13 19:08	1
1,2,4-Trimethylbenzene	ND		1.0	0.75	ug/L			01/15/13 19:08	1
1,2-Dibromo-3-Chloropropane	ND		5.0	0.39	ug/L			01/15/13 19:08	1
1,2-Dichlorobenzene	ND		1.0	0.79	ug/L			01/15/13 19:08	1
1,2-Dichloroethane	ND		1.0	0.21	ug/L			01/15/13 19:08	1
1,2-Dichloropropane	ND		1.0	0.72	ug/L			01/15/13 19:08	1
1,3,5-Trimethylbenzene	ND		1.0	0.77	ug/L			01/15/13 19:08	1
1,3-Dichlorobenzene	ND		1.0	0.78	ug/L			01/15/13 19:08	1
1,3-Dichloropropane	ND		1.0	0.75	ug/L			01/15/13 19:08	1
1,4-Dichlorobenzene	ND		1.0	0.84	ug/L			01/15/13 19:08	1
1,4-Dioxane	ND		50	9.3	ug/L			01/15/13 19:08	1
2,2-Dichloropropane	ND		1.0	0.40	ug/L			01/15/13 19:08	1
2-Butanone (MEK)	ND	*	10	1.3	ug/L			01/15/13 19:08	1
2-Chlorotoluene	ND		1.0	0.86	ug/L			01/15/13 19:08	1
2-Hexanone	ND		10	1.2	ug/L			01/15/13 19:08	1
4-Chlorotoluene	ND		1.0	0.84	ug/L			01/15/13 19:08	1
4-Isopropyltoluene	ND		1.0	0.31	ug/L			01/15/13 19:08	1
4-Methyl-2-pentanone (MIBK)	ND		10	2.1	ug/L			01/15/13 19:08	1
Acetone	**5.2**	**J**	50	3.0	ug/L			01/15/13 19:08	1
Benzene	ND		1.0	0.41	ug/L			01/15/13 19:08	1
Bromobenzene	ND		1.0	0.80	ug/L			01/15/13 19:08	1
Bromoform	ND		1.0	0.26	ug/L			01/15/13 19:08	1
Bromomethane	ND		2.0	0.69	ug/L			01/15/13 19:08	1
Carbon disulfide	ND		10	0.19	ug/L			01/15/13 19:08	1
Carbon tetrachloride	ND		1.0	0.27	ug/L			01/15/13 19:08	1
Chlorobenzene	ND		1.0	0.75	ug/L			01/15/13 19:08	1
Chlorobromomethane	ND		1.0	0.87	ug/L			01/15/13 19:08	1
Chlorodibromomethane	ND		0.50	0.32	ug/L			01/15/13 19:08	1
Chloroethane	ND		2.0	0.32	ug/L			01/15/13 19:08	1
Chloroform	ND		1.0	0.34	ug/L			01/15/13 19:08	1
Chloromethane	ND		2.0	0.35	ug/L			01/15/13 19:08	1

Client Sample ID: Trip Blanks

Lab Sample ID: 480-31428-12

Date Collected: 01/10/13 00:00

Matrix: Water

Date Received: 01/11/13 08:00

Method: 8260C - Volatile Organic Compounds (GC/MS) (Continued)

Analyte	Result	Qualifier	RL	MDL	Unit	D	Prepared	Analyzed	Dil Fac
cis-1,2-Dichloroethene	ND		1.0	0.81	ug/L			01/15/13 19:08	1
cis-1,3-Dichloropropene	ND		0.40	0.36	ug/L			01/15/13 19:08	1
Dichlorobromomethane	ND		0.50	0.39	ug/L			01/15/13 19:08	1
Dichlorodifluoromethane	ND		1.0	0.68	ug/L			01/15/13 19:08	1
Ethyl ether	ND		1.0	0.72	ug/L			01/15/13 19:08	1
Ethylbenzene	ND		1.0	0.74	ug/L			01/15/13 19:08	1
Ethylene Dibromide	ND		1.0	0.73	ug/L			01/15/13 19:08	1
Hexachlorobutadiene	ND		0.40	0.28	ug/L			01/15/13 19:08	1
Isopropyl ether	ND		10	0.59	ug/L			01/15/13 19:08	1
Isopropylbenzene	ND		1.0	0.79	ug/L			01/15/13 19:08	1
Methyl tert-butyl ether	ND		1.0	0.16	ug/L			01/15/13 19:08	1
Methylene Chloride	ND		1.0	0.44	ug/L			01/15/13 19:08	1
m-Xylene & p-Xylene	ND		2.0	0.66	ug/L			01/15/13 19:08	1
Naphthalene	ND		5.0	0.43	ug/L			01/15/13 19:08	1
n-Butylbenzene	ND		1.0	0.64	ug/L			01/15/13 19:08	1
N-Propylbenzene	ND		1.0	0.69	ug/L			01/15/13 19:08	1
o-Xylene	ND		1.0	0.76	ug/L			01/15/13 19:08	1
sec-Butylbenzene	ND		1.0	0.75	ug/L			01/15/13 19:08	1
Styrene	ND		1.0	0.73	ug/L			01/15/13 19:08	1
Tert-amyl methyl ether	ND		5.0	0.27	ug/L			01/15/13 19:08	1
Tert-butyl ethyl ether	ND		5.0	0.29	ug/L			01/15/13 19:08	1
tert-Butylbenzene	ND		1.0	0.81	ug/L			01/15/13 19:08	1
Tetrachloroethene	ND		1.0	0.36	ug/L			01/15/13 19:08	1
Tetrahydrofuran	ND		10	1.3	ug/L			01/15/13 19:08	1
Toluene	ND		1.0	0.51	ug/L			01/15/13 19:08	1
trans-1,2-Dichloroethene	ND		1.0	0.90	ug/L			01/15/13 19:08	1
trans-1,3-Dichloropropene	ND		0.40	0.37	ug/L			01/15/13 19:08	1
Trichloroethene	ND		1.0	0.46	ug/L			01/15/13 19:08	1
Trichlorofluoromethane	ND		1.0	0.88	ug/L			01/15/13 19:08	1
Vinyl chloride	ND		0.50	0.90	ug/L			01/15/13 19:08	1
Dibromomethane	ND		1.0	0.41	ug/L			01/15/13 19:08	1

Surrogate	*%Recovery*	*Qualifier*	*Limits*	*Prepared*	*Analyzed*	*Dil Fac*
Toluene-d8 (Surr)	*95*		*70 - 130*		*01/15/13 19:08*	*1*
1,2-Dichloroethane-d4 (Surr)	*102*		*70 - 130*		*01/15/13 19:08*	*1*
4-Bromofluorobenzene (Surr)	*89*		*70 - 130*		*01/15/13 19:08*	*1*

Surrogate Summary

Client: Innovative Engineering Solutions, Inc
Project/Site: IDS Wayland

TestAmerica Job ID: 480-31428-1

Method: 8260C - Volatile Organic Compounds (GC/MS)

Matrix: Water **Prep Type: Total/NA**

		Percent Surrogate Recovery (Acceptance Limits)		
		TOL	12DCE	BFB
Lab Sample ID	Client Sample ID	(70-130)	(70-130)	(70-130)
480-31428-1	REW-1-20130110-01	98	102	92
480-31428-1 - DL	REW-1-20130110-01	98	103	91
480-31428-1 MS	REW-1-20130110-01	95	97	91
480-31428-1 MSD	REW-1-20130110-01	95	95	91
480-31428-2	REW-6-20130110-01	92	98	87
480-31428-3	REW-7-20130110-01	101	101	91
480-31428-3 - DL	REW-7-20130110-01	95	99	90
480-31428-4	REW-8-20130110-01	98	102	93
480-31428-4 - DL	REW-8-20130110-01	97	100	92
480-31428-5	REW-12-20130110-01	96	99	89
480-31428-5 - DL	REW-12-20130110-01	94	98	86
480-31428-6	MW-261S-20130110-01	98	103	91
480-31428-6 - DL	MW-261S-20130110-01	95	103	89
480-31428-7 - DL	MW-265M-20130110-01	96	100	90
480-31428-8	MW-552-20130110-01	93	100	88
480-31428-9	MW-562-20130110-01	93	99	88
480-31428-10	MW-563-20130110-01	94	100	87
480-31428-11	DUP-X-20130110-01	97	100	91
480-31428-11 - DL	DUP-X-20130110-01	94	98	88
480-31428-12	Trip Blanks	95	102	89
LCS 480-99374/4	Lab Control Sample	101	103	100
LCS 480-99567/4	Lab Control Sample	98	99	95
LCSD 480-99374/5	Lab Control Sample Dup	97	97	94
LCSD 480-99567/5	Lab Control Sample Dup	99	101	96
MB 480-99374/7	Method Blank	97	99	90
MB 480-99567/7	Method Blank	96	98	90

Surrogate Legend

TOL = Toluene-d8 (Surr)
12DCE = 1,2-Dichloroethane-d4 (Surr)
BFB = 4-Bromofluorobenzene (Surr)

Method: 8260C - Volatile Organic Compounds (GC/MS)

Lab Sample ID: MB 480-99374/7
Matrix: Water
Analysis Batch: 99374

Client Sample ID: Method Blank
Prep Type: Total/NA

Analyte	MB Result	MB Qualifier	RL	MDL	Unit	D	Prepared	Analyzed	Dil Fac
1,1,1,2-Tetrachloroethane	ND		1.0	0.35	ug/L			01/14/13 13:37	1
1,1,1-Trichloroethane	ND		1.0	0.82	ug/L			01/14/13 13:37	1
1,1,2,2-Tetrachloroethane	ND		0.50	0.21	ug/L			01/14/13 13:37	1
1,1,2-Trichloroethane	ND		1.0	0.23	ug/L			01/14/13 13:37	1
1,1-Dichloroethane	ND		1.0	0.38	ug/L			01/14/13 13:37	1
1,1-Dichloroethene	ND		1.0	0.29	ug/L			01/14/13 13:37	1
1,1-Dichloropropene	ND		1.0	0.72	ug/L			01/14/13 13:37	1
1,2,3-Trichlorobenzene	ND		1.0	0.41	ug/L			01/14/13 13:37	1
1,2,3-Trichloropropane	ND		1.0	0.89	ug/L			01/14/13 13:37	1
1,2,4-Trichlorobenzene	ND		1.0	0.41	ug/L			01/14/13 13:37	1
1,2,4-Trimethylbenzene	ND		1.0	0.75	ug/L			01/14/13 13:37	1
1,2-Dibromo-3-Chloropropane	ND		5.0	0.39	ug/L			01/14/13 13:37	1
1,2-Dichlorobenzene	ND		1.0	0.79	ug/L			01/14/13 13:37	1
1,2-Dichloroethane	ND		1.0	0.21	ug/L			01/14/13 13:37	1
1,2-Dichloropropane	ND		1.0	0.72	ug/L			01/14/13 13:37	1
1,3,5-Trimethylbenzene	ND		1.0	0.77	ug/L			01/14/13 13:37	1
1,3-Dichlorobenzene	ND		1.0	0.78	ug/L			01/14/13 13:37	1
1,3-Dichloropropane	ND		1.0	0.75	ug/L			01/14/13 13:37	1
1,4-Dichlorobenzene	ND		1.0	0.84	ug/L			01/14/13 13:37	1
1,4-Dioxane	ND		50	9.3	ug/L			01/14/13 13:37	1
2,2-Dichloropropane	ND		1.0	0.40	ug/L			01/14/13 13:37	1
2-Butanone (MEK)	ND		10	1.3	ug/L			01/14/13 13:37	1
2-Chlorotoluene	ND		1.0	0.86	ug/L			01/14/13 13:37	1
2-Hexanone	ND		10	1.2	ug/L			01/14/13 13:37	1
4-Chlorotoluene	ND		1.0	0.84	ug/L			01/14/13 13:37	1
4-Isopropyltoluene	ND		1.0	0.31	ug/L			01/14/13 13:37	1
4-Methyl-2-pentanone (MIBK)	ND		10	2.1	ug/L			01/14/13 13:37	1
Acetone	ND		50	3.0	ug/L			01/14/13 13:37	1
Benzene	ND		1.0	0.41	ug/L			01/14/13 13:37	1
Bromobenzene	ND		1.0	0.80	ug/L			01/14/13 13:37	1
Bromoform	ND		1.0	0.26	ug/L			01/14/13 13:37	1
Bromomethane	ND		2.0	0.69	ug/L			01/14/13 13:37	1
Carbon disulfide	ND		10	0.19	ug/L			01/14/13 13:37	1
Carbon tetrachloride	ND		1.0	0.27	ug/L			01/14/13 13:37	1
Chlorobenzene	ND		1.0	0.75	ug/L			01/14/13 13:37	1
Chlorobromomethane	ND		1.0	0.87	ug/L			01/14/13 13:37	1
Chlorodibromomethane	ND		0.50	0.32	ug/L			01/14/13 13:37	1
Chloroethane	ND		2.0	0.32	ug/L			01/14/13 13:37	1
Chloroform	ND		1.0	0.34	ug/L			01/14/13 13:37	1
Chloromethane	ND		2.0	0.35	ug/L			01/14/13 13:37	1
cis-1,2-Dichloroethene	ND		1.0	0.81	ug/L			01/14/13 13:37	1
cis-1,3-Dichloropropene	ND		0.40	0.36	ug/L			01/14/13 13:37	1
Dichlorobromomethane	ND		0.50	0.39	ug/L			01/14/13 13:37	1
Dichlorodifluoromethane	ND		1.0	0.68	ug/L			01/14/13 13:37	1
Ethyl ether	ND		1.0	0.72	ug/L			01/14/13 13:37	1
Ethylbenzene	ND		1.0	0.74	ug/L			01/14/13 13:37	1
Ethylene Dibromide	ND		1.0	0.73	ug/L			01/14/13 13:37	1
Hexachlorobutadiene	ND		0.40	0.28	ug/L			01/14/13 13:37	1

Method: 8260C - Volatile Organic Compounds (GC/MS) (Continued)

Lab Sample ID: MB 480-99374/7
Matrix: Water
Analysis Batch: 99374

Client Sample ID: Method Blank
Prep Type: Total/NA

Analyte	MB Result	MB Qualifier	RL	MDL	Unit	D	Prepared	Analyzed	Dil Fac
Isopropyl ether	ND		10	0.59	ug/L			01/14/13 13:37	1
Isopropylbenzene	ND		1.0	0.79	ug/L			01/14/13 13:37	1
Methyl tert-butyl ether	ND		1.0	0.16	ug/L			01/14/13 13:37	1
Methylene Chloride	ND		1.0	0.44	ug/L			01/14/13 13:37	1
m-Xylene & p-Xylene	ND		2.0	0.66	ug/L			01/14/13 13:37	1
Naphthalene	ND		5.0	0.43	ug/L			01/14/13 13:37	1
n-Butylbenzene	ND		1.0	0.64	ug/L			01/14/13 13:37	1
N-Propylbenzene	ND		1.0	0.69	ug/L			01/14/13 13:37	1
o-Xylene	ND		1.0	0.76	ug/L			01/14/13 13:37	1
sec-Butylbenzene	ND		1.0	0.75	ug/L			01/14/13 13:37	1
Styrene	ND		1.0	0.73	ug/L			01/14/13 13:37	1
Tert-amyl methyl ether	ND		5.0	0.27	ug/L			01/14/13 13:37	1
Tert-butyl ethyl ether	ND		5.0	0.29	ug/L			01/14/13 13:37	1
tert-Butylbenzene	ND		1.0	0.81	ug/L			01/14/13 13:37	1
Tetrachloroethene	ND		1.0	0.36	ug/L			01/14/13 13:37	1
Tetrahydrofuran	ND		10	1.3	ug/L			01/14/13 13:37	1
Toluene	ND		1.0	0.51	ug/L			01/14/13 13:37	1
trans-1,2-Dichloroethene	ND		1.0	0.90	ug/L			01/14/13 13:37	1
trans-1,3-Dichloropropene	ND		0.40	0.37	ug/L			01/14/13 13:37	1
Trichloroethene	ND		1.0	0.46	ug/L			01/14/13 13:37	1
Trichlorofluoromethane	ND		1.0	0.88	ug/L			01/14/13 13:37	1
Vinyl chloride	ND		0.50	0.90	ug/L			01/14/13 13:37	1
Dibromomethane	ND		1.0	0.41	ug/L			01/14/13 13:37	1

Surrogate	*MB %Recovery*	*MB Qualifier*	*Limits*	*Prepared*	*Analyzed*	*Dil Fac*
Toluene-d8 (Surr)	*97*		*70 - 130*		*01/14/13 13:37*	*1*
1,2-Dichloroethane-d4 (Surr)	*99*		*70 - 130*		*01/14/13 13:37*	*1*
4-Bromofluorobenzene (Surr)	*90*		*70 - 130*		*01/14/13 13:37*	*1*

Lab Sample ID: LCS 480-99374/4
Matrix: Water
Analysis Batch: 99374

Client Sample ID: Lab Control Sample
Prep Type: Total/NA

Analyte	Spike Added	LCS Result	LCS Qualifier	Unit	D	%Rec	%Rec. Limits
1,1,1,2-Tetrachloroethane	25.0	27.5		ug/L		110	70 - 130
1,1,1-Trichloroethane	25.0	26.6		ug/L		106	70 - 130
1,1,2,2-Tetrachloroethane	25.0	26.5		ug/L		106	70 - 130
1,1,2-Trichloroethane	25.0	26.5		ug/L		106	70 - 130
1,1-Dichloroethane	25.0	26.6		ug/L		106	70 - 130
1,1-Dichloroethene	25.0	25.8		ug/L		103	70 - 130
1,1-Dichloropropene	25.0	28.0		ug/L		112	70 - 130
1,2,3-Trichlorobenzene	25.0	26.0		ug/L		104	70 - 130
1,2,3-Trichloropropane	25.0	25.9		ug/L		104	70 - 130
1,2,4-Trichlorobenzene	25.0	25.9		ug/L		104	70 - 130
1,2,4-Trimethylbenzene	25.0	26.9		ug/L		108	70 - 130
1,2-Dibromo-3-Chloropropane	25.0	25.8		ug/L		103	70 - 130
1,2-Dichlorobenzene	25.0	25.9		ug/L		104	70 - 130
1,2-Dichloroethane	25.0	25.8		ug/L		103	70 - 130

Method: 8260C - Volatile Organic Compounds (GC/MS) (Continued)

Lab Sample ID: LCS 480-99374/4
Matrix: Water
Analysis Batch: 99374

Client Sample ID: Lab Control Sample
Prep Type: Total/NA

Analyte	Spike Added	LCS Result	LCS Qualifier	Unit	D	%Rec	%Rec. Limits
1,2-Dichloropropane	25.0	26.8		ug/L		107	70 - 130
1,3,5-Trimethylbenzene	25.0	26.7		ug/L		107	70 - 130
1,3-Dichlorobenzene	25.0	26.1		ug/L		104	70 - 130
1,3-Dichloropropane	25.0	26.3		ug/L		105	70 - 130
1,4-Dichlorobenzene	25.0	26.1		ug/L		104	70 - 130
1,4-Dioxane	1000	952		ug/L		95	70 - 130
2,2-Dichloropropane	25.0	27.2		ug/L		109	70 - 130
2-Butanone (MEK)	125	188	*	ug/L		150	70 - 130
2-Chlorotoluene	25.0	30.2		ug/L		121	70 - 130
2-Hexanone	125	140		ug/L		112	70 - 130
4-Chlorotoluene	25.0	27.1		ug/L		108	70 - 130
4-Isopropyltoluene	25.0	27.6		ug/L		110	70 - 130
4-Methyl-2-pentanone (MIBK)	125	139		ug/L		112	70 - 130
Acetone	125	129		ug/L		104	70 - 130
Benzene	25.0	26.4		ug/L		106	70 - 130
Bromobenzene	25.0	25.7		ug/L		103	70 - 130
Bromoform	25.0	28.3		ug/L		113	70 - 130
Bromomethane	25.0	27.1		ug/L		109	70 - 130
Carbon disulfide	25.0	23.3		ug/L		93	70 - 130
Carbon tetrachloride	25.0	26.5		ug/L		106	70 - 130
Chlorobenzene	25.0	26.4		ug/L		105	70 - 130
Chlorobromomethane	25.0	27.3		ug/L		109	70 - 130
Chlorodibromomethane	25.0	28.3		ug/L		113	70 - 130
Chloroethane	25.0	25.3		ug/L		101	70 - 130
Chloroform	25.0	25.8		ug/L		103	70 - 130
Chloromethane	25.0	25.3		ug/L		101	70 - 130
cis-1,2-Dichloroethene	25.0	26.8		ug/L		107	70 - 130
cis-1,3-Dichloropropene	25.0	28.2		ug/L		113	70 - 130
Dichlorobromomethane	25.0	27.2		ug/L		109	70 - 130
Dichlorodifluoromethane	50.0	52.3		ug/L		105	70 - 130
Ethyl ether	25.0	27.2		ug/L		109	70 - 130
Ethylbenzene	25.0	26.8		ug/L		107	70 - 130
Ethylene Dibromide	25.0	26.7		ug/L		107	70 - 130
Hexachlorobutadiene	25.0	26.3		ug/L		105	70 - 130
Isopropyl ether	25.0	26.8		ug/L		107	70 - 130
Isopropylbenzene	25.0	26.5		ug/L		106	70 - 130
Methyl tert-butyl ether	25.0	26.5		ug/L		106	70 - 130
Methylene Chloride	25.0	26.5		ug/L		106	70 - 130
m-Xylene & p-Xylene	50.0	54.3		ug/L		109	70 - 130
Naphthalene	25.0	26.4		ug/L		106	70 - 130
n-Butylbenzene	25.0	27.2		ug/L		109	70 - 130
N-Propylbenzene	25.0	27.4		ug/L		110	70 - 130
o-Xylene	25.0	27.7		ug/L		111	70 - 130
sec-Butylbenzene	25.0	26.8		ug/L		107	70 - 130
Styrene	25.0	28.1		ug/L		112	70 - 130
Tert-amyl methyl ether	25.0	25.5		ug/L		102	70 - 130
Tert-butyl ethyl ether	25.0	25.2		ug/L		101	70 - 130
tert-Butylbenzene	25.0	27.2		ug/L		109	70 - 130

Method: 8260C - Volatile Organic Compounds (GC/MS) (Continued)

Lab Sample ID: LCS 480-99374/4
Matrix: Water
Analysis Batch: 99374

Client Sample ID: Lab Control Sample
Prep Type: Total/NA

Analyte	Spike Added	LCS Result	LCS Qualifier	Unit	D	%Rec	%Rec. Limits
Tetrachloroethene	25.0	28.1		ug/L		112	70 - 130
Tetrahydrofuran	125	137		ug/L		110	70 - 130
Toluene	25.0	27.2		ug/L		109	70 - 130
trans-1,2-Dichloroethene	25.0	26.4		ug/L		106	70 - 130
trans-1,3-Dichloropropene	25.0	29.6		ug/L		118	70 - 130
Trichloroethene	25.0	26.6		ug/L		107	70 - 130
Trichlorofluoromethane	25.0	25.8		ug/L		103	70 - 130
Vinyl chloride	25.0	24.9		ug/L		100	70 - 130
Dibromomethane	25.0	26.3		ug/L		105	70 - 130

Surrogate	*LCS %Recovery*	*LCS Qualifier*	*Limits*
Toluene-d8 (Surr)	*101*		*70 - 130*
1,2-Dichloroethane-d4 (Surr)	*103*		*70 - 130*
4-Bromofluorobenzene (Surr)	*100*		*70 - 130*

Lab Sample ID: LCSD 480-99374/5
Matrix: Water
Analysis Batch: 99374

Client Sample ID: Lab Control Sample Dup
Prep Type: Total/NA

Analyte	Spike Added	LCSD Result	LCSD Qualifier	Unit	D	%Rec	%Rec. Limits	RPD	RPD Limit
1,1,1,2-Tetrachloroethane	25.0	26.0		ug/L		104	70 - 130	5	20
1,1,1-Trichloroethane	25.0	24.8		ug/L		99	70 - 130	7	20
1,1,2,2-Tetrachloroethane	25.0	25.6		ug/L		102	70 - 130	3	20
1,1,2-Trichloroethane	25.0	25.7		ug/L		103	70 - 130	3	20
1,1-Dichloroethane	25.0	24.7		ug/L		99	70 - 130	8	20
1,1-Dichloroethene	25.0	23.0		ug/L		92	70 - 130	12	20
1,1-Dichloropropene	25.0	26.3		ug/L		105	70 - 130	6	20
1,2,3-Trichlorobenzene	25.0	25.4		ug/L		102	70 - 130	2	20
1,2,3-Trichloropropane	25.0	25.2		ug/L		101	70 - 130	3	20
1,2,4-Trichlorobenzene	25.0	25.4		ug/L		102	70 - 130	2	20
1,2,4-Trimethylbenzene	25.0	25.5		ug/L		102	70 - 130	5	20
1,2-Dibromo-3-Chloropropane	25.0	26.0		ug/L		104	70 - 130	1	20
1,2-Dichlorobenzene	25.0	24.9		ug/L		100	70 - 130	4	20
1,2-Dichloroethane	25.0	24.7		ug/L		99	70 - 130	4	20
1,2-Dichloropropane	25.0	25.1		ug/L		100	70 - 130	6	20
1,3,5-Trimethylbenzene	25.0	25.4		ug/L		102	70 - 130	5	20
1,3-Dichlorobenzene	25.0	24.8		ug/L		99	70 - 130	5	20
1,3-Dichloropropane	25.0	25.3		ug/L		101	70 - 130	4	20
1,4-Dichlorobenzene	25.0	24.8		ug/L		99	70 - 130	5	20
1,4-Dioxane	1000	895		ug/L		89	70 - 130	6	20
2,2-Dichloropropane	25.0	25.4		ug/L		102	70 - 130	7	20
2-Butanone (MEK)	125	182	*	ug/L		146	70 - 130	3	20
2-Chlorotoluene	25.0	28.3		ug/L		113	70 - 130	6	20
2-Hexanone	125	136		ug/L		109	70 - 130	2	20
4-Chlorotoluene	25.0	25.4		ug/L		102	70 - 130	6	20
4-Isopropyltoluene	25.0	25.9		ug/L		104	70 - 130	6	20
4-Methyl-2-pentanone (MIBK)	125	135		ug/L		108	70 - 130	3	20
Acetone	125	126		ug/L		101	70 - 130	3	20

Method: 8260C - Volatile Organic Compounds (GC/MS) (Continued)

Lab Sample ID: LCSD 480-99374/5
Matrix: Water
Analysis Batch: 99374

Client Sample ID: Lab Control Sample Dup
Prep Type: Total/NA

Analyte	Spike Added	LCSD Result	LCSD Qualifier	Unit	D	%Rec	%Rec. Limits	RPD	RPD Limit
Benzene	25.0	24.8		ug/L		99	70 - 130	6	20
Bromobenzene	25.0	24.7		ug/L		99	70 - 130	4	20
Bromoform	25.0	27.3		ug/L		109	70 - 130	3	20
Bromomethane	25.0	25.3		ug/L		101	70 - 130	7	20
Carbon disulfide	25.0	21.9		ug/L		88	70 - 130	6	20
Carbon tetrachloride	25.0	25.3		ug/L		101	70 - 130	5	20
Chlorobenzene	25.0	24.8		ug/L		99	70 - 130	6	20
Chlorobromomethane	25.0	25.5		ug/L		102	70 - 130	7	20
Chlorodibromomethane	25.0	26.8		ug/L		107	70 - 130	6	20
Chloroethane	25.0	23.2		ug/L		93	70 - 130	9	20
Chloroform	25.0	24.6		ug/L		98	70 - 130	5	20
Chloromethane	25.0	24.0		ug/L		96	70 - 130	5	20
cis-1,2-Dichloroethene	25.0	24.9		ug/L		100	70 - 130	7	20
cis-1,3-Dichloropropene	25.0	26.7		ug/L		107	70 - 130	5	20
Dichlorobromomethane	25.0	25.4		ug/L		102	70 - 130	7	20
Dichlorodifluoromethane	50.0	47.4		ug/L		95	70 - 130	10	20
Ethyl ether	25.0	25.9		ug/L		104	70 - 130	5	20
Ethylbenzene	25.0	24.7		ug/L		99	70 - 130	8	20
Ethylene Dibromide	25.0	25.8		ug/L		103	70 - 130	4	20
Hexachlorobutadiene	25.0	25.3		ug/L		101	70 - 130	4	20
Isopropyl ether	25.0	25.6		ug/L		102	70 - 130	5	20
Isopropylbenzene	25.0	25.1		ug/L		100	70 - 130	6	20
Methyl tert-butyl ether	25.0	25.6		ug/L		102	70 - 130	3	20
Methylene Chloride	25.0	24.6		ug/L		98	70 - 130	7	20
m-Xylene & p-Xylene	50.0	51.2		ug/L		102	70 - 130	6	20
Naphthalene	25.0	25.8		ug/L		103	70 - 130	2	20
n-Butylbenzene	25.0	25.3		ug/L		101	70 - 130	7	20
N-Propylbenzene	25.0	25.8		ug/L		103	70 - 130	6	20
o-Xylene	25.0	25.9		ug/L		104	70 - 130	7	20
sec-Butylbenzene	25.0	25.3		ug/L		101	70 - 130	6	20
Styrene	25.0	26.3		ug/L		105	70 - 130	6	20
Tert-amyl methyl ether	25.0	24.7		ug/L		99	70 - 130	3	20
Tert-butyl ethyl ether	25.0	23.9		ug/L		95	70 - 130	5	20
tert-Butylbenzene	25.0	25.5		ug/L		102	70 - 130	6	20
Tetrachloroethene	25.0	26.1		ug/L		104	70 - 130	7	20
Tetrahydrofuran	125	133		ug/L		106	70 - 130	3	20
Toluene	25.0	25.4		ug/L		102	70 - 130	7	20
trans-1,2-Dichloroethene	25.0	24.8		ug/L		99	70 - 130	7	20
trans-1,3-Dichloropropene	25.0	28.0		ug/L		112	70 - 130	6	20
Trichloroethene	25.0	25.0		ug/L		100	70 - 130	6	20
Trichlorofluoromethane	25.0	23.6		ug/L		94	70 - 130	9	20
Vinyl chloride	25.0	23.1		ug/L		93	70 - 130	7	20
Dibromomethane	25.0	25.1		ug/L		100	70 - 130	5	20

Surrogate	*LCSD %Recovery*	*LCSD Qualifier*	*Limits*
Toluene-d8 (Surr)	*97*		*70 - 130*
1,2-Dichloroethane-d4 (Surr)	*97*		*70 - 130*
4-Bromofluorobenzene (Surr)	*94*		*70 - 130*

Method: 8260C - Volatile Organic Compounds (GC/MS) (Continued)

Lab Sample ID: MB 480-99567/7
Matrix: Water
Analysis Batch: 99567

Client Sample ID: Method Blank
Prep Type: Total/NA

Analyte	MB Result	MB Qualifier	RL	MDL	Unit	D	Prepared	Analyzed	Dil Fac
1,1,1,2-Tetrachloroethane	ND		1.0	0.35	ug/L			01/15/13 13:50	1
1,1,1-Trichloroethane	ND		1.0	0.82	ug/L			01/15/13 13:50	1
1,1,2,2-Tetrachloroethane	ND		0.50	0.21	ug/L			01/15/13 13:50	1
1,1,2-Trichloroethane	ND		1.0	0.23	ug/L			01/15/13 13:50	1
1,1-Dichloroethane	ND		1.0	0.38	ug/L			01/15/13 13:50	1
1,1-Dichloroethene	ND		1.0	0.29	ug/L			01/15/13 13:50	1
1,1-Dichloropropene	ND		1.0	0.72	ug/L			01/15/13 13:50	1
1,2,3-Trichlorobenzene	ND		1.0	0.41	ug/L			01/15/13 13:50	1
1,2,3-Trichloropropane	ND		1.0	0.89	ug/L			01/15/13 13:50	1
1,2,4-Trichlorobenzene	ND		1.0	0.41	ug/L			01/15/13 13:50	1
1,2,4-Trimethylbenzene	ND		1.0	0.75	ug/L			01/15/13 13:50	1
1,2-Dibromo-3-Chloropropane	ND		5.0	0.39	ug/L			01/15/13 13:50	1
1,2-Dichlorobenzene	ND		1.0	0.79	ug/L			01/15/13 13:50	1
1,2-Dichloroethane	ND		1.0	0.21	ug/L			01/15/13 13:50	1
1,2-Dichloropropane	ND		1.0	0.72	ug/L			01/15/13 13:50	1
1,3,5-Trimethylbenzene	ND		1.0	0.77	ug/L			01/15/13 13:50	1
1,3-Dichlorobenzene	ND		1.0	0.78	ug/L			01/15/13 13:50	1
1,3-Dichloropropane	ND		1.0	0.75	ug/L			01/15/13 13:50	1
1,4-Dichlorobenzene	ND		1.0	0.84	ug/L			01/15/13 13:50	1
1,4-Dioxane	ND		50	9.3	ug/L			01/15/13 13:50	1
2,2-Dichloropropane	ND		1.0	0.40	ug/L			01/15/13 13:50	1
2-Butanone (MEK)	ND		10	1.3	ug/L			01/15/13 13:50	1
2-Chlorotoluene	ND		1.0	0.86	ug/L			01/15/13 13:50	1
2-Hexanone	ND		10	1.2	ug/L			01/15/13 13:50	1
4-Chlorotoluene	ND		1.0	0.84	ug/L			01/15/13 13:50	1
4-Isopropyltoluene	ND		1.0	0.31	ug/L			01/15/13 13:50	1
4-Methyl-2-pentanone (MIBK)	ND		10	2.1	ug/L			01/15/13 13:50	1
Acetone	ND		50	3.0	ug/L			01/15/13 13:50	1
Benzene	ND		1.0	0.41	ug/L			01/15/13 13:50	1
Bromobenzene	ND		1.0	0.80	ug/L			01/15/13 13:50	1
Bromoform	ND		1.0	0.26	ug/L			01/15/13 13:50	1
Bromomethane	ND		2.0	0.69	ug/L			01/15/13 13:50	1
Carbon disulfide	ND		10	0.19	ug/L			01/15/13 13:50	1
Carbon tetrachloride	ND		1.0	0.27	ug/L			01/15/13 13:50	1
Chlorobenzene	ND		1.0	0.75	ug/L			01/15/13 13:50	1
Chlorobromomethane	ND		1.0	0.87	ug/L			01/15/13 13:50	1
Chlorodibromomethane	ND		0.50	0.32	ug/L			01/15/13 13:50	1
Chloroethane	ND		2.0	0.32	ug/L			01/15/13 13:50	1
Chloroform	ND		1.0	0.34	ug/L			01/15/13 13:50	1
Chloromethane	ND		2.0	0.35	ug/L			01/15/13 13:50	1
cis-1,2-Dichloroethene	ND		1.0	0.81	ug/L			01/15/13 13:50	1
cis-1,3-Dichloropropene	ND		0.40	0.36	ug/L			01/15/13 13:50	1
Dichlorobromomethane	ND		0.50	0.39	ug/L			01/15/13 13:50	1
Dichlorodifluoromethane	ND		1.0	0.68	ug/L			01/15/13 13:50	1
Ethyl ether	ND		1.0	0.72	ug/L			01/15/13 13:50	1
Ethylbenzene	ND		1.0	0.74	ug/L			01/15/13 13:50	1
Ethylene Dibromide	ND		1.0	0.73	ug/L			01/15/13 13:50	1
Hexachlorobutadiene	ND		0.40	0.28	ug/L			01/15/13 13:50	1

Method: 8260C - Volatile Organic Compounds (GC/MS) (Continued)

Lab Sample ID: MB 480-99567/7
Matrix: Water
Analysis Batch: 99567

Client Sample ID: Method Blank
Prep Type: Total/NA

Analyte	MB Result	MB Qualifier	RL	MDL	Unit	D	Prepared	Analyzed	Dil Fac
Isopropyl ether	ND		10	0.59	ug/L			01/15/13 13:50	1
Isopropylbenzene	ND		1.0	0.79	ug/L			01/15/13 13:50	1
Methyl tert-butyl ether	ND		1.0	0.16	ug/L			01/15/13 13:50	1
Methylene Chloride	ND		1.0	0.44	ug/L			01/15/13 13:50	1
m-Xylene & p-Xylene	ND		2.0	0.66	ug/L			01/15/13 13:50	1
Naphthalene	ND		5.0	0.43	ug/L			01/15/13 13:50	1
n-Butylbenzene	ND		1.0	0.64	ug/L			01/15/13 13:50	1
N-Propylbenzene	ND		1.0	0.69	ug/L			01/15/13 13:50	1
o-Xylene	ND		1.0	0.76	ug/L			01/15/13 13:50	1
sec-Butylbenzene	ND		1.0	0.75	ug/L			01/15/13 13:50	1
Styrene	ND		1.0	0.73	ug/L			01/15/13 13:50	1
Tert-amyl methyl ether	ND		5.0	0.27	ug/L			01/15/13 13:50	1
Tert-butyl ethyl ether	ND		5.0	0.29	ug/L			01/15/13 13:50	1
tert-Butylbenzene	ND		1.0	0.81	ug/L			01/15/13 13:50	1
Tetrachloroethene	ND		1.0	0.36	ug/L			01/15/13 13:50	1
Tetrahydrofuran	ND		10	1.3	ug/L			01/15/13 13:50	1
Toluene	ND		1.0	0.51	ug/L			01/15/13 13:50	1
trans-1,2-Dichloroethene	ND		1.0	0.90	ug/L			01/15/13 13:50	1
trans-1,3-Dichloropropene	ND		0.40	0.37	ug/L			01/15/13 13:50	1
Trichloroethene	ND		1.0	0.46	ug/L			01/15/13 13:50	1
Trichlorofluoromethane	ND		1.0	0.88	ug/L			01/15/13 13:50	1
Vinyl chloride	ND		0.50	0.90	ug/L			01/15/13 13:50	1
Dibromomethane	ND		1.0	0.41	ug/L			01/15/13 13:50	1

Surrogate	*MB %Recovery*	*MB Qualifier*	*Limits*	*Prepared*	*Analyzed*	*Dil Fac*
Toluene-d8 (Surr)	*96*		*70 - 130*		*01/15/13 13:50*	*1*
1,2-Dichloroethane-d4 (Surr)	*98*		*70 - 130*		*01/15/13 13:50*	*1*
4-Bromofluorobenzene (Surr)	*90*		*70 - 130*		*01/15/13 13:50*	*1*

Lab Sample ID: LCS 480-99567/4
Matrix: Water
Analysis Batch: 99567

Client Sample ID: Lab Control Sample
Prep Type: Total/NA

Analyte	Spike Added	LCS Result	LCS Qualifier	Unit	D	%Rec	%Rec. Limits
1,1,1,2-Tetrachloroethane	25.0	26.3		ug/L		105	70 - 130
1,1,1-Trichloroethane	25.0	25.0		ug/L		100	70 - 130
1,1,2,2-Tetrachloroethane	25.0	25.4		ug/L		101	70 - 130
1,1,2-Trichloroethane	25.0	25.4		ug/L		102	70 - 130
1,1-Dichloroethane	25.0	25.6		ug/L		103	70 - 130
1,1-Dichloroethene	25.0	23.2		ug/L		93	70 - 130
1,1-Dichloropropene	25.0	26.7		ug/L		107	70 - 130
1,2,3-Trichlorobenzene	25.0	25.0		ug/L		100	70 - 130
1,2,3-Trichloropropane	25.0	25.0		ug/L		100	70 - 130
1,2,4-Trichlorobenzene	25.0	24.8		ug/L		99	70 - 130
1,2,4-Trimethylbenzene	25.0	25.6		ug/L		102	70 - 130
1,2-Dibromo-3-Chloropropane	25.0	25.1		ug/L		100	70 - 130
1,2-Dichlorobenzene	25.0	24.6		ug/L		98	70 - 130
1,2-Dichloroethane	25.0	24.9		ug/L		100	70 - 130

Method: 8260C - Volatile Organic Compounds (GC/MS) (Continued)

Lab Sample ID: LCS 480-99567/4
Matrix: Water
Analysis Batch: 99567

Client Sample ID: Lab Control Sample
Prep Type: Total/NA

Analyte	Spike Added	LCS Result	LCS Qualifier	Unit	D	%Rec	%Rec. Limits
1,2-Dichloropropane	25.0	25.6		ug/L		102	70 - 130
1,3,5-Trimethylbenzene	25.0	25.5		ug/L		102	70 - 130
1,3-Dichlorobenzene	25.0	24.7		ug/L		99	70 - 130
1,3-Dichloropropane	25.0	25.3		ug/L		101	70 - 130
1,4-Dichlorobenzene	25.0	24.9		ug/L		100	70 - 130
1,4-Dioxane	1000	927		ug/L		93	70 - 130
2,2-Dichloropropane	25.0	25.5		ug/L		102	70 - 130
2-Butanone (MEK)	125	180	*	ug/L		144	70 - 130
2-Chlorotoluene	25.0	27.9		ug/L		112	70 - 130
2-Hexanone	125	132		ug/L		105	70 - 130
4-Chlorotoluene	25.0	26.3		ug/L		105	70 - 130
4-Isopropyltoluene	25.0	26.0		ug/L		104	70 - 130
4-Methyl-2-pentanone (MIBK)	125	132		ug/L		106	70 - 130
Acetone	125	123		ug/L		98	70 - 130
Benzene	25.0	25.5		ug/L		102	70 - 130
Bromobenzene	25.0	25.1		ug/L		100	70 - 130
Bromoform	25.0	26.8		ug/L		107	70 - 130
Bromomethane	25.0	24.8		ug/L		99	70 - 130
Carbon disulfide	25.0	21.4		ug/L		86	70 - 130
Carbon tetrachloride	25.0	25.1		ug/L		100	70 - 130
Chlorobenzene	25.0	25.1		ug/L		101	70 - 130
Chlorobromomethane	25.0	25.6		ug/L		103	70 - 130
Chlorodibromomethane	25.0	26.5		ug/L		106	70 - 130
Chloroethane	25.0	23.7		ug/L		95	70 - 130
Chloroform	25.0	25.2		ug/L		101	70 - 130
Chloromethane	25.0	23.7		ug/L		95	70 - 130
cis-1,2-Dichloroethene	25.0	25.3		ug/L		101	70 - 130
cis-1,3-Dichloropropene	25.0	27.3		ug/L		109	70 - 130
Dichlorobromomethane	25.0	25.7		ug/L		103	70 - 130
Dichlorodifluoromethane	50.0	50.1		ug/L		100	70 - 130
Ethyl ether	25.0	27.3		ug/L		109	70 - 130
Ethylbenzene	25.0	25.1		ug/L		100	70 - 130
Ethylene Dibromide	25.0	25.3		ug/L		101	70 - 130
Hexachlorobutadiene	25.0	26.1		ug/L		104	70 - 130
Isopropyl ether	25.0	26.4		ug/L		106	70 - 130
Isopropylbenzene	25.0	25.2		ug/L		101	70 - 130
Methyl tert-butyl ether	25.0	25.2		ug/L		101	70 - 130
Methylene Chloride	25.0	25.4		ug/L		102	70 - 130
m-Xylene & p-Xylene	50.0	51.8		ug/L		104	70 - 130
Naphthalene	25.0	25.1		ug/L		101	70 - 130
n-Butylbenzene	25.0	25.9		ug/L		104	70 - 130
N-Propylbenzene	25.0	26.0		ug/L		104	70 - 130
o-Xylene	25.0	25.9		ug/L		104	70 - 130
sec-Butylbenzene	25.0	25.7		ug/L		103	70 - 130
Styrene	25.0	26.4		ug/L		105	70 - 130
Tert-amyl methyl ether	25.0	25.0		ug/L		100	70 - 130
Tert-butyl ethyl ether	25.0	24.5		ug/L		98	70 - 130
tert-Butylbenzene	25.0	26.0		ug/L		104	70 - 130

Method: 8260C - Volatile Organic Compounds (GC/MS) (Continued)

Lab Sample ID: LCS 480-99567/4
Matrix: Water
Analysis Batch: 99567

Client Sample ID: Lab Control Sample
Prep Type: Total/NA

Analyte	Spike Added	LCS Result	LCS Qualifier	Unit	D	%Rec	%Rec. Limits
Tetrachloroethene	25.0	27.2		ug/L		109	70 - 130
Tetrahydrofuran	125	131		ug/L		105	70 - 130
Toluene	25.0	25.8		ug/L		103	70 - 130
trans-1,2-Dichloroethene	25.0	25.3		ug/L		101	70 - 130
trans-1,3-Dichloropropene	25.0	28.1		ug/L		112	70 - 130
Trichloroethene	25.0	25.7		ug/L		103	70 - 130
Trichlorofluoromethane	25.0	24.7		ug/L		99	70 - 130
Vinyl chloride	25.0	23.1		ug/L		93	70 - 130
Dibromomethane	25.0	25.4		ug/L		102	70 - 130

Surrogate	*LCS %Recovery*	*LCS Qualifier*	*Limits*
Toluene-d8 (Surr)	*98*		*70 - 130*
1,2-Dichloroethane-d4 (Surr)	*99*		*70 - 130*
4-Bromofluorobenzene (Surr)	*95*		*70 - 130*

Lab Sample ID: LCSD 480-99567/5
Matrix: Water
Analysis Batch: 99567

Client Sample ID: Lab Control Sample Dup
Prep Type: Total/NA

Analyte	Spike Added	LCSD Result	LCSD Qualifier	Unit	D	%Rec	%Rec. Limits	RPD	RPD Limit
1,1,1,2-Tetrachloroethane	25.0	26.2		ug/L		105	70 - 130	0	20
1,1,1-Trichloroethane	25.0	26.0		ug/L		104	70 - 130	4	20
1,1,2,2-Tetrachloroethane	25.0	25.7		ug/L		103	70 - 130	1	20
1,1,2-Trichloroethane	25.0	25.2		ug/L		101	70 - 130	1	20
1,1-Dichloroethane	25.0	26.4		ug/L		106	70 - 130	3	20
1,1-Dichloroethene	25.0	25.3		ug/L		101	70 - 130	9	20
1,1-Dichloropropene	25.0	27.8		ug/L		111	70 - 130	4	20
1,2,3-Trichlorobenzene	25.0	25.9		ug/L		104	70 - 130	4	20
1,2,3-Trichloropropane	25.0	25.5		ug/L		102	70 - 130	2	20
1,2,4-Trichlorobenzene	25.0	26.0		ug/L		104	70 - 130	5	20
1,2,4-Trimethylbenzene	25.0	27.0		ug/L		108	70 - 130	5	20
1,2-Dibromo-3-Chloropropane	25.0	25.4		ug/L		102	70 - 130	1	20
1,2-Dichlorobenzene	25.0	25.9		ug/L		104	70 - 130	5	20
1,2-Dichloroethane	25.0	25.4		ug/L		102	70 - 130	2	20
1,2-Dichloropropane	25.0	26.6		ug/L		106	70 - 130	4	20
1,3,5-Trimethylbenzene	25.0	26.9		ug/L		108	70 - 130	6	20
1,3-Dichlorobenzene	25.0	26.0		ug/L		104	70 - 130	5	20
1,3-Dichloropropane	25.0	25.4		ug/L		102	70 - 130	0	20
1,4-Dichlorobenzene	25.0	25.8		ug/L		103	70 - 130	4	20
1,4-Dioxane	1000	947		ug/L		95	70 - 130	2	20
2,2-Dichloropropane	25.0	26.7		ug/L		107	70 - 130	5	20
2-Butanone (MEK)	125	181	*	ug/L		145	70 - 130	1	20
2-Chlorotoluene	25.0	30.9		ug/L		123	70 - 130	10	20
2-Hexanone	125	130		ug/L		104	70 - 130	1	20
4-Chlorotoluene	25.0	31.3		ug/L		125	70 - 130	17	20
4-Isopropyltoluene	25.0	27.6		ug/L		110	70 - 130	6	20
4-Methyl-2-pentanone (MIBK)	125	132		ug/L		106	70 - 130	0	20
Acetone	125	123		ug/L		98	70 - 130	0	20

Method: 8260C - Volatile Organic Compounds (GC/MS) (Continued)

Lab Sample ID: LCSD 480-99567/5
Matrix: Water
Analysis Batch: 99567

Client Sample ID: Lab Control Sample Dup
Prep Type: Total/NA

Analyte	Spike Added	LCSD Result	LCSD Qualifier	Unit	D	%Rec	%Rec. Limits	RPD	RPD Limit
Benzene	25.0	26.2		ug/L		105	70 - 130	3	20
Bromobenzene	25.0	25.9		ug/L		104	70 - 130	3	20
Bromoform	25.0	27.4		ug/L		110	70 - 130	2	20
Bromomethane	25.0	26.5		ug/L		106	70 - 130	7	20
Carbon disulfide	25.0	21.5		ug/L		86	70 - 130	1	20
Carbon tetrachloride	25.0	26.8		ug/L		107	70 - 130	7	20
Chlorobenzene	25.0	25.5		ug/L		102	70 - 130	1	20
Chlorobromomethane	25.0	26.5		ug/L		106	70 - 130	3	20
Chlorodibromomethane	25.0	26.4		ug/L		105	70 - 130	1	20
Chloroethane	25.0	25.0		ug/L		100	70 - 130	5	20
Chloroform	25.0	25.8		ug/L		103	70 - 130	3	20
Chloromethane	25.0	24.9		ug/L		99	70 - 130	5	20
cis-1,2-Dichloroethene	25.0	26.1		ug/L		104	70 - 130	3	20
cis-1,3-Dichloropropene	25.0	27.4		ug/L		110	70 - 130	1	20
Dichlorobromomethane	25.0	26.2		ug/L		105	70 - 130	2	20
Dichlorodifluoromethane	50.0	52.5		ug/L		105	70 - 130	5	20
Ethyl ether	25.0	26.9		ug/L		108	70 - 130	1	20
Ethylbenzene	25.0	25.8		ug/L		103	70 - 130	3	20
Ethylene Dibromide	25.0	25.7		ug/L		103	70 - 130	2	20
Hexachlorobutadiene	25.0	27.3		ug/L		109	70 - 130	4	20
Isopropyl ether	25.0	26.8		ug/L		107	70 - 130	1	20
Isopropylbenzene	25.0	26.6		ug/L		107	70 - 130	5	20
Methyl tert-butyl ether	25.0	25.7		ug/L		103	70 - 130	2	20
Methylene Chloride	25.0	26.1		ug/L		105	70 - 130	3	20
m-Xylene & p-Xylene	50.0	53.0		ug/L		106	70 - 130	2	20
Naphthalene	25.0	25.7		ug/L		103	70 - 130	2	20
n-Butylbenzene	25.0	27.5		ug/L		110	70 - 130	6	20
N-Propylbenzene	25.0	27.3		ug/L		109	70 - 130	5	20
o-Xylene	25.0	26.5		ug/L		106	70 - 130	3	20
sec-Butylbenzene	25.0	27.2		ug/L		109	70 - 130	6	20
Styrene	25.0	27.3		ug/L		109	70 - 130	4	20
Tert-amyl methyl ether	25.0	25.5		ug/L		102	70 - 130	2	20
Tert-butyl ethyl ether	25.0	25.1		ug/L		100	70 - 130	2	20
tert-Butylbenzene	25.0	27.2		ug/L		109	70 - 130	5	20
Tetrachloroethene	25.0	27.7		ug/L		111	70 - 130	2	20
Tetrahydrofuran	125	128		ug/L		102	70 - 130	2	20
Toluene	25.0	26.5		ug/L		106	70 - 130	2	20
trans-1,2-Dichloroethene	25.0	26.1		ug/L		104	70 - 130	3	20
trans-1,3-Dichloropropene	25.0	28.1		ug/L		112	70 - 130	0	20
Trichloroethene	25.0	26.8		ug/L		107	70 - 130	4	20
Trichlorofluoromethane	25.0	25.3		ug/L		101	70 - 130	3	20
Vinyl chloride	25.0	24.2		ug/L		97	70 - 130	4	20
Dibromomethane	25.0	25.7		ug/L		103	70 - 130	1	20

Surrogate	*LCSD %Recovery*	*LCSD Qualifier*	*Limits*
Toluene-d8 (Surr)	*99*		*70 - 130*
1,2-Dichloroethane-d4 (Surr)	*101*		*70 - 130*
4-Bromofluorobenzene (Surr)	*96*		*70 - 130*

Method: 8260C - Volatile Organic Compounds (GC/MS) (Continued)

Lab Sample ID: 480-31428-1 MS
Matrix: Water
Analysis Batch: 99567

Client Sample ID: REW-1-20130110-01
Prep Type: Total/NA

Analyte	Sample Result	Sample Qualifier	Spike Added	MS Result	MS Qualifier	Unit	D	%Rec	%Rec. Limits
1,1,1,2-Tetrachloroethane	ND		2500	2510		ug/L		100	70 - 130
1,1,1-Trichloroethane	ND		2500	2480		ug/L		99	70 - 130
1,1,2,2-Tetrachloroethane	ND		2500	2460		ug/L		98	70 - 130
1,1,2-Trichloroethane	ND		2500	2520		ug/L		101	70 - 130
1,1-Dichloroethane	ND		2500	2590		ug/L		104	70 - 130
1,1-Dichloroethene	ND		2500	2480		ug/L		99	70 - 130
1,1-Dichloropropene	ND		2500	2680		ug/L		107	70 - 130
1,2,3-Trichlorobenzene	ND		2500	2370		ug/L		95	70 - 130
1,2,3-Trichloropropane	ND		2500	2390		ug/L		96	70 - 130
1,2,4-Trichlorobenzene	ND		2500	2320		ug/L		93	70 - 130
1,2,4-Trimethylbenzene	ND		2500	2470		ug/L		99	70 - 130
1,2-Dibromo-3-Chloropropane	ND		2500	2360		ug/L		94	70 - 130
1,2-Dichlorobenzene	ND		2500	2400		ug/L		96	70 - 130
1,2-Dichloroethane	ND		2500	2480		ug/L		99	70 - 130
1,2-Dichloropropane	ND		2500	2570		ug/L		103	70 - 130
1,3,5-Trimethylbenzene	ND		2500	2460		ug/L		99	70 - 130
1,3-Dichlorobenzene	ND		2500	2400		ug/L		96	70 - 130
1,3-Dichloropropane	ND		2500	2470		ug/L		99	70 - 130
1,4-Dichlorobenzene	ND		2500	2410		ug/L		96	70 - 130
1,4-Dioxane	ND		100000	77700		ug/L		78	70 - 130
2,2-Dichloropropane	ND		2500	2220		ug/L		89	70 - 130
2-Butanone (MEK)	170		12500	17700	F	ug/L		140	70 - 130
2-Chlorotoluene	ND		2500	2810		ug/L		112	70 - 130
2-Hexanone	ND		12500	12700		ug/L		101	70 - 130
4-Chlorotoluene	ND		2500	2870		ug/L		115	70 - 130
4-Isopropyltoluene	ND		2500	2490		ug/L		100	70 - 130
4-Methyl-2-pentanone (MIBK)	ND		12500	12800		ug/L		102	70 - 130
Acetone	29000		12500	38000		ug/L		71	70 - 130
Benzene	ND		2500	2560		ug/L		102	70 - 130
Bromobenzene	ND		2500	2410		ug/L		96	70 - 130
Bromoform	ND		2500	2630		ug/L		105	70 - 130
Bromomethane	ND		2500	2560		ug/L		103	70 - 130
Carbon disulfide	ND		2500	2280		ug/L		91	70 - 130
Carbon tetrachloride	ND		2500	2580		ug/L		103	70 - 130
Chlorobenzene	ND		2500	2490		ug/L		99	70 - 130
Chlorobromomethane	ND		2500	2630		ug/L		105	70 - 130
Chlorodibromomethane	ND		2500	2590		ug/L		104	70 - 130
Chloroethane	ND		2500	2420		ug/L		97	70 - 130
Chloroform	ND		2500	2500		ug/L		100	70 - 130
Chloromethane	ND		2500	2430		ug/L		97	70 - 130
cis-1,2-Dichloroethene	ND		2500	2560		ug/L		102	70 - 130
cis-1,3-Dichloropropene	ND		2500	2550		ug/L		102	70 - 130
Dichlorobromomethane	ND		2500	2550		ug/L		102	70 - 130
Dichlorodifluoromethane	ND		5000	5090		ug/L		102	70 - 130
Ethyl ether	ND		2500	2590		ug/L		104	70 - 130
Ethylbenzene	ND		2500	2460		ug/L		99	70 - 130
Ethylene Dibromide	ND		2500	2450		ug/L		98	70 - 130
Hexachlorobutadiene	ND		2500	2370		ug/L		95	70 - 130

Method: 8260C - Volatile Organic Compounds (GC/MS) (Continued)

Lab Sample ID: 480-31428-1 MS
Matrix: Water
Analysis Batch: 99567

Client Sample ID: REW-1-20130110-01
Prep Type: Total/NA

Analyte	Sample Result	Sample Qualifier	Spike Added	MS Result	MS Qualifier	Unit	D	%Rec	%Rec. Limits
Isopropyl ether	ND		2500	2570		ug/L		103	70 - 130
Isopropylbenzene	ND		2500	2420		ug/L		97	70 - 130
Methyl tert-butyl ether	ND		2500	2530		ug/L		101	70 - 130
Methylene Chloride	ND		2500	2550		ug/L		102	70 - 130
m-Xylene & p-Xylene	ND		5000	5080		ug/L		102	70 - 130
Naphthalene	ND		2500	2340		ug/L		94	70 - 130
n-Butylbenzene	ND		2500	2430		ug/L		97	70 - 130
N-Propylbenzene	ND		2500	2500		ug/L		100	70 - 130
o-Xylene	ND		2500	2550		ug/L		102	70 - 130
sec-Butylbenzene	ND		2500	2470		ug/L		99	70 - 130
Styrene	ND		2500	2610		ug/L		104	70 - 130
Tert-amyl methyl ether	ND		2500	2400		ug/L		96	70 - 130
Tert-butyl ethyl ether	ND		2500	2390		ug/L		96	70 - 130
tert-Butylbenzene	ND		2500	2480		ug/L		99	70 - 130
Tetrachloroethene	ND		2500	2650		ug/L		106	70 - 130
Tetrahydrofuran	ND		12500	12800		ug/L		102	70 - 130
Toluene	ND		2500	2540		ug/L		102	70 - 130
trans-1,2-Dichloroethene	ND		2500	2540		ug/L		102	70 - 130
trans-1,3-Dichloropropene	ND		2500	2630		ug/L		105	70 - 130
Trichloroethene	ND		2500	2580		ug/L		103	70 - 130
Trichlorofluoromethane	ND		2500	2520		ug/L		101	70 - 130
Vinyl chloride	ND		2500	2380		ug/L		95	70 - 130
Dibromomethane	ND		2500	2460		ug/L		98	70 - 130

Surrogate	*MS %Recovery*	*MS Qualifier*	*Limits*
Toluene-d8 (Surr)	*95*		*70 - 130*
1,2-Dichloroethane-d4 (Surr)	*97*		*70 - 130*
4-Bromofluorobenzene (Surr)	*91*		*70 - 130*

Lab Sample ID: 480-31428-1 MSD
Matrix: Water
Analysis Batch: 99567

Client Sample ID: REW-1-20130110-01
Prep Type: Total/NA

Analyte	Sample Result	Sample Qualifier	Spike Added	MSD Result	MSD Qualifier	Unit	D	%Rec	%Rec. Limits	RPD	RPD Limit
1,1,1,2-Tetrachloroethane	ND		2500	2470		ug/L		99	70 - 130	2	20
1,1,1-Trichloroethane	ND		2500	2440		ug/L		98	70 - 130	2	20
1,1,2,2-Tetrachloroethane	ND		2500	2480		ug/L		99	70 - 130	1	20
1,1,2-Trichloroethane	ND		2500	2470		ug/L		99	70 - 130	2	20
1,1-Dichloroethane	ND		2500	2500		ug/L		100	70 - 130	3	20
1,1-Dichloroethene	ND		2500	2370		ug/L		95	70 - 130	5	20
1,1-Dichloropropene	ND		2500	2580		ug/L		103	70 - 130	4	20
1,2,3-Trichlorobenzene	ND		2500	2400		ug/L		96	70 - 130	1	20
1,2,3-Trichloropropane	ND		2500	2390		ug/L		95	70 - 130	0	20
1,2,4-Trichlorobenzene	ND		2500	2350		ug/L		94	70 - 130	1	20
1,2,4-Trimethylbenzene	ND		2500	2460		ug/L		99	70 - 130	0	20
1,2-Dibromo-3-Chloropropane	ND		2500	2420		ug/L		97	70 - 130	3	20
1,2-Dichlorobenzene	ND		2500	2380		ug/L		95	70 - 130	1	20
1,2-Dichloroethane	ND		2500	2400		ug/L		96	70 - 130	3	20

Method: 8260C - Volatile Organic Compounds (GC/MS) (Continued)

Lab Sample ID: 480-31428-1 MSD
Matrix: Water
Analysis Batch: 99567

Client Sample ID: REW-1-20130110-01
Prep Type: Total/NA

Analyte	Sample Result	Sample Qualifier	Spike Added	MSD Result	MSD Qualifier	Unit	D	%Rec	%Rec. Limits	RPD	RPD Limit
1,2-Dichloropropane	ND		2500	2500		ug/L		100	70 - 130	3	20
1,3,5-Trimethylbenzene	ND		2500	2420		ug/L		97	70 - 130	2	20
1,3-Dichlorobenzene	ND		2500	2380		ug/L		95	70 - 130	1	20
1,3-Dichloropropane	ND		2500	2420		ug/L		97	70 - 130	2	20
1,4-Dichlorobenzene	ND		2500	2390		ug/L		96	70 - 130	1	20
1,4-Dioxane	ND		100000	87800		ug/L		88	70 - 130	12	20
2,2-Dichloropropane	ND		2500	2170		ug/L		87	70 - 130	2	20
2-Butanone (MEK)	170		12500	17500	F	ug/L		139	70 - 130	1	20
2-Chlorotoluene	ND		2500	2740		ug/L		110	70 - 130	2	20
2-Hexanone	ND		12500	12700		ug/L		102	70 - 130	0	20
4-Chlorotoluene	ND		2500	2890		ug/L		116	70 - 130	1	20
4-Isopropyltoluene	ND		2500	2460		ug/L		98	70 - 130	1	20
4-Methyl-2-pentanone (MIBK)	ND		12500	12800		ug/L		103	70 - 130	0	20
Acetone	29000		12500	37400	F	ug/L		66	70 - 130	1	20
Benzene	ND		2500	2470		ug/L		99	70 - 130	3	20
Bromobenzene	ND		2500	2370		ug/L		95	70 - 130	1	20
Bromoform	ND		2500	2550		ug/L		102	70 - 130	3	20
Bromomethane	ND		2500	2460		ug/L		99	70 - 130	4	20
Carbon disulfide	ND		2500	2140		ug/L		85	70 - 130	6	20
Carbon tetrachloride	ND		2500	2540		ug/L		101	70 - 130	2	20
Chlorobenzene	ND		2500	2420		ug/L		97	70 - 130	3	20
Chlorobromomethane	ND		2500	2520		ug/L		101	70 - 130	4	20
Chlorodibromomethane	ND		2500	2530		ug/L		101	70 - 130	2	20
Chloroethane	ND		2500	2280		ug/L		91	70 - 130	6	20
Chloroform	ND		2500	2400		ug/L		96	70 - 130	4	20
Chloromethane	ND		2500	2320		ug/L		93	70 - 130	5	20
cis-1,2-Dichloroethene	ND		2500	2500		ug/L		100	70 - 130	2	20
cis-1,3-Dichloropropene	ND		2500	2530		ug/L		101	70 - 130	1	20
Dichlorobromomethane	ND		2500	2490		ug/L		100	70 - 130	2	20
Dichlorodifluoromethane	ND		5000	4800		ug/L		96	70 - 130	6	20
Ethyl ether	ND		2500	2580		ug/L		103	70 - 130	1	20
Ethylbenzene	ND		2500	2420		ug/L		97	70 - 130	2	20
Ethylene Dibromide	ND		2500	2480		ug/L		99	70 - 130	1	20
Hexachlorobutadiene	ND		2500	2420		ug/L		97	70 - 130	2	20
Isopropyl ether	ND		2500	2500		ug/L		100	70 - 130	3	20
Isopropylbenzene	ND		2500	2400		ug/L		96	70 - 130	1	20
Methyl tert-butyl ether	ND		2500	2470		ug/L		99	70 - 130	2	20
Methylene Chloride	ND		2500	2500		ug/L		100	70 - 130	2	20
m-Xylene & p-Xylene	ND		5000	4950		ug/L		99	70 - 130	3	20
Naphthalene	ND		2500	2400		ug/L		96	70 - 130	2	20
n-Butylbenzene	ND		2500	2420		ug/L		97	70 - 130	0	20
N-Propylbenzene	ND		2500	2450		ug/L		98	70 - 130	2	20
o-Xylene	ND		2500	2490		ug/L		100	70 - 130	3	20
sec-Butylbenzene	ND		2500	2440		ug/L		98	70 - 130	1	20
Styrene	ND		2500	2560		ug/L		103	70 - 130	2	20
Tert-amyl methyl ether	ND		2500	2380		ug/L		95	70 - 130	1	20
Tert-butyl ethyl ether	ND		2500	2330		ug/L		93	70 - 130	2	20
tert-Butylbenzene	ND		2500	2450		ug/L		98	70 - 130	1	20

Method: 8260C - Volatile Organic Compounds (GC/MS) (Continued)

Lab Sample ID: 480-31428-1 MSD
Matrix: Water
Analysis Batch: 99567

Client Sample ID: REW-1-20130110-01
Prep Type: Total/NA

Analyte	Sample Result	Sample Qualifier	Spike Added	MSD Result	MSD Qualifier	Unit	D	%Rec	%Rec. Limits	RPD	RPD Limit
Tetrachloroethene	ND		2500	2610		ug/L		104	70 - 130	2	20
Tetrahydrofuran	ND		12500	12800		ug/L		102	70 - 130	0	20
Toluene	ND		2500	2490		ug/L		100	70 - 130	2	20
trans-1,2-Dichloroethene	ND		2500	2470		ug/L		99	70 - 130	3	20
trans-1,3-Dichloropropene	ND		2500	2570		ug/L		103	70 - 130	3	20
Trichloroethene	ND		2500	2530		ug/L		101	70 - 130	2	20
Trichlorofluoromethane	ND		2500	1880	F	ug/L		75	70 - 130	29	20
Vinyl chloride	ND		2500	2310		ug/L		92	70 - 130	3	20
Dibromomethane	ND		2500	2420		ug/L		97	70 - 130	1	20

Surrogate	*MSD %Recovery*	*MSD Qualifier*	*Limits*
Toluene-d8 (Surr)	*95*		*70 - 130*
1,2-Dichloroethane-d4 (Surr)	*95*		*70 - 130*
4-Bromofluorobenzene (Surr)	*91*		*70 - 130*

QC Association Summary

Client: Innovative Engineering Solutions, Inc
Project/Site: IDS Wayland

TestAmerica Job ID: 480-31428-1

GC/MS VOA

Analysis Batch: 99374

Lab Sample ID	Client Sample ID	Prep Type	Matrix	Method	Prep Batch
480-31428-1	REW-1-20130110-01	Total/NA	Water	8260C	
480-31428-3	REW-7-20130110-01	Total/NA	Water	8260C	
480-31428-4	REW-8-20130110-01	Total/NA	Water	8260C	
480-31428-5	REW-12-20130110-01	Total/NA	Water	8260C	
480-31428-6	MW-261S-20130110-01	Total/NA	Water	8260C	
480-31428-11	DUP-X-20130110-01	Total/NA	Water	8260C	
LCS 480-99374/4	Lab Control Sample	Total/NA	Water	8260C	
LCSD 480-99374/5	Lab Control Sample Dup	Total/NA	Water	8260C	
MB 480-99374/7	Method Blank	Total/NA	Water	8260C	

Analysis Batch: 99567

Lab Sample ID	Client Sample ID	Prep Type	Matrix	Method	Prep Batch
480-31428-1 - DL	REW-1-20130110-01	Total/NA	Water	8260C	
480-31428-1 MS	REW-1-20130110-01	Total/NA	Water	8260C	
480-31428-1 MSD	REW-1-20130110-01	Total/NA	Water	8260C	
480-31428-2	REW-6-20130110-01	Total/NA	Water	8260C	
480-31428-3 - DL	REW-7-20130110-01	Total/NA	Water	8260C	
480-31428-4 - DL	REW-8-20130110-01	Total/NA	Water	8260C	
480-31428-5 - DL	REW-12-20130110-01	Total/NA	Water	8260C	
480-31428-6 - DL	MW-261S-20130110-01	Total/NA	Water	8260C	
480-31428-7 - DL	MW-265M-20130110-01	Total/NA	Water	8260C	
480-31428-8	MW-552-20130110-01	Total/NA	Water	8260C	
480-31428-9	MW-562-20130110-01	Total/NA	Water	8260C	
480-31428-10	MW-563-20130110-01	Total/NA	Water	8260C	
480-31428-11 - DL	DUP-X-20130110-01	Total/NA	Water	8260C	
480-31428-12	Trip Blanks	Total/NA	Water	8260C	
LCS 480-99567/4	Lab Control Sample	Total/NA	Water	8260C	
LCSD 480-99567/5	Lab Control Sample Dup	Total/NA	Water	8260C	
MB 480-99567/7	Method Blank	Total/NA	Water	8260C	

Lab Chronicle

Client: Innovative Engineering Solutions, Inc
Project/Site: IDS Wayland

TestAmerica Job ID: 480-31428-1

Client Sample ID: REW-1-20130110-01 — Lab Sample ID: 480-31428-1

Date Collected: 01/10/13 11:50 — **Matrix: Water**
Date Received: 01/11/13 08:00

Prep Type	Batch Type	Batch Method	Run	Dilution Factor	Batch Number	Prepared or Analyzed	Analyst	Lab
Total/NA	Analysis	8260C		5	99374	01/14/13 17:14	LH	TAL BUF
Total/NA	Analysis	8260C	DL	100	99567	01/15/13 14:31	RL	TAL BUF

Client Sample ID: REW-6-20130110-01 — Lab Sample ID: 480-31428-2

Date Collected: 01/10/13 09:50 — **Matrix: Water**
Date Received: 01/11/13 08:00

Prep Type	Batch Type	Batch Method	Run	Dilution Factor	Batch Number	Prepared or Analyzed	Analyst	Lab
Total/NA	Analysis	8260C		8	99567	01/15/13 14:56	RL	TAL BUF

Client Sample ID: REW-7-20130110-01 — Lab Sample ID: 480-31428-3

Date Collected: 01/10/13 11:10 — **Matrix: Water**
Date Received: 01/11/13 08:00

Prep Type	Batch Type	Batch Method	Run	Dilution Factor	Batch Number	Prepared or Analyzed	Analyst	Lab
Total/NA	Analysis	8260C		1	99374	01/14/13 18:04	LH	TAL BUF
Total/NA	Analysis	8260C	DL	20	99567	01/15/13 15:22	RL	TAL BUF

Client Sample ID: REW-8-20130110-01 — Lab Sample ID: 480-31428-4

Date Collected: 01/10/13 12:30 — **Matrix: Water**
Date Received: 01/11/13 08:00

Prep Type	Batch Type	Batch Method	Run	Dilution Factor	Batch Number	Prepared or Analyzed	Analyst	Lab
Total/NA	Analysis	8260C		1	99374	01/14/13 18:29	LH	TAL BUF
Total/NA	Analysis	8260C	DL	5	99567	01/15/13 15:47	RL	TAL BUF

Client Sample ID: REW-12-20130110-01 — Lab Sample ID: 480-31428-5

Date Collected: 01/10/13 08:55 — **Matrix: Water**
Date Received: 01/11/13 08:00

Prep Type	Batch Type	Batch Method	Run	Dilution Factor	Batch Number	Prepared or Analyzed	Analyst	Lab
Total/NA	Analysis	8260C		1	99374	01/14/13 18:54	LH	TAL BUF
Total/NA	Analysis	8260C	DL	4	99567	01/15/13 16:12	RL	TAL BUF

Client Sample ID: MW-261S-20130110-01 — Lab Sample ID: 480-31428-6

Date Collected: 01/10/13 10:35 — **Matrix: Water**
Date Received: 01/11/13 08:00

Prep Type	Batch Type	Batch Method	Run	Dilution Factor	Batch Number	Prepared or Analyzed	Analyst	Lab
Total/NA	Analysis	8260C		5	99374	01/14/13 19:19	LH	TAL BUF
Total/NA	Analysis	8260C	DL	400	99567	01/15/13 16:37	RL	TAL BUF

Lab Chronicle

Client: Innovative Engineering Solutions, Inc
Project/Site: IDS Wayland

TestAmerica Job ID: 480-31428-1

Client Sample ID: MW-265M-20130110-01 — Lab Sample ID: 480-31428-7

Date Collected: 01/10/13 12:10 — **Matrix: Water**
Date Received: 01/11/13 08:00

Prep Type	Batch Type	Batch Method	Run	Dilution Factor	Batch Number	Prepared or Analyzed	Analyst	Lab
Total/NA	Analysis	8260C	DL	100	99567	01/15/13 17:02	RL	TAL BUF

Client Sample ID: MW-552-20130110-01 — Lab Sample ID: 480-31428-8

Date Collected: 01/10/13 09:45 — **Matrix: Water**
Date Received: 01/11/13 08:00

Prep Type	Batch Type	Batch Method	Run	Dilution Factor	Batch Number	Prepared or Analyzed	Analyst	Lab
Total/NA	Analysis	8260C		40	99567	01/15/13 17:27	RL	TAL BUF

Client Sample ID: MW-562-20130110-01 — Lab Sample ID: 480-31428-9

Date Collected: 01/10/13 11:25 — **Matrix: Water**
Date Received: 01/11/13 08:00

Prep Type	Batch Type	Batch Method	Run	Dilution Factor	Batch Number	Prepared or Analyzed	Analyst	Lab
Total/NA	Analysis	8260C		40	99567	01/15/13 17:52	RL	TAL BUF

Client Sample ID: MW-563-20130110-01 — Lab Sample ID: 480-31428-10

Date Collected: 01/10/13 09:00 — **Matrix: Water**
Date Received: 01/11/13 08:00

Prep Type	Batch Type	Batch Method	Run	Dilution Factor	Batch Number	Prepared or Analyzed	Analyst	Lab
Total/NA	Analysis	8260C		5	99567	01/15/13 18:17	RL	TAL BUF

Client Sample ID: DUP-X-20130110-01 — Lab Sample ID: 480-31428-11

Date Collected: 01/10/13 00:00 — **Matrix: Water**
Date Received: 01/11/13 08:00

Prep Type	Batch Type	Batch Method	Run	Dilution Factor	Batch Number	Prepared or Analyzed	Analyst	Lab
Total/NA	Analysis	8260C		1	99374	01/14/13 21:26	LH	TAL BUF
Total/NA	Analysis	8260C	DL	4	99567	01/15/13 18:43	RL	TAL BUF

Client Sample ID: Trip Blanks — Lab Sample ID: 480-31428-12

Date Collected: 01/10/13 00:00 — **Matrix: Water**
Date Received: 01/11/13 08:00

Prep Type	Batch Type	Batch Method	Run	Dilution Factor	Batch Number	Prepared or Analyzed	Analyst	Lab
Total/NA	Analysis	8260C		1	99567	01/15/13 19:08	RL	TAL BUF

Laboratory References:

TAL BUF = TestAmerica Buffalo, 10 Hazelwood Drive, Amherst, NY 14228-2298, TEL (716)691-2600

Certification Summary

Client: Innovative Engineering Solutions, Inc
Project/Site: IDS Wayland

TestAmerica Job ID: 480-31428-1

Laboratory: TestAmerica Buffalo

All certifications held by this laboratory are listed. Not all certifications are applicable to this report.

Authority	Program	EPA Region	Certification ID	Expiration Date
Arkansas DEQ	State Program	6	88-0686	07-06-13
California	NELAP	9	1169CA	09-30-13
Connecticut	State Program	1	PH-0568	09-30-14
Florida	NELAP	4	E87672	06-30-13
Georgia	State Program	4	N/A	03-31-13
Georgia	State Program	4	956	06-30-13
Georgia	State Program	4	956	06-30-13
Illinois	NELAP	5	200003	09-30-13
Iowa	State Program	7	374	03-01-13
Kansas	NELAP	7	E-10187	01-31-13
Kentucky	State Program	4	90029	12-31-12
Kentucky (UST)	State Program	4	30	04-01-13
Louisiana	NELAP	6	02031	06-30-13
Maine	State Program	1	NY00044	12-04-13
Maryland	State Program	3	294	03-31-13
Massachusetts	State Program	1	M-NY044	06-30-13
Michigan	State Program	5	9937	04-01-13
Minnesota	NELAP	5	036-999-337	12-31-13
New Hampshire	NELAP	1	2973	09-11-13
New Hampshire	NELAP	1	2337	11-17-13
New Jersey	NELAP	2	NY455	06-30-13
New York	NELAP	2	10026	03-31-13
North Dakota	State Program	8	R-176	03-31-13
Oklahoma	State Program	6	9421	08-31-13
Oregon	NELAP	10	NY200003	06-09-13
Pennsylvania	NELAP	3	68-00281	07-31-13
Rhode Island	State Program	1	LAO00328	12-31-13
Tennessee	State Program	4	TN02970	04-01-13
Texas	NELAP	6	T104704412-11-2	07-31-13
USDA	Federal		P330-11-00386	11-22-14
Virginia	NELAP	3	460185	09-14-13
Washington	State Program	10	C784	02-10-13
West Virginia DEP	State Program	3	252	09-30-13
Wisconsin	State Program	5	998310390	08-31-13

Method Summary

Client: Innovative Engineering Solutions, Inc
Project/Site: IDS Wayland

TestAmerica Job ID: 480-31428-1

Method	Method Description	Protocol	Laboratory
8260C	Volatile Organic Compounds (GC/MS)	MA DEP	TAL BUF

Protocol References:

MA DEP = Massachusetts Department Of Environmental Protection

Laboratory References:

TAL BUF = TestAmerica Buffalo, 10 Hazelwood Drive, Amherst, NY 14228-2298, TEL (716)691-2600

Sample Summary

Client: Innovative Engineering Solutions, Inc
Project/Site: IDS Wayland

TestAmerica Job ID: 480-31428-1

Lab Sample ID	Client Sample ID	Matrix	Collected	Received
480-31428-1	REW-1-20130110-01	Water	01/10/13 11:50	01/11/13 08:00
480-31428-2	REW-6-20130110-01	Water	01/10/13 09:50	01/11/13 08:00
480-31428-3	REW-7-20130110-01	Water	01/10/13 11:10	01/11/13 08:00
480-31428-4	REW-8-20130110-01	Water	01/10/13 12:30	01/11/13 08:00
480-31428-5	REW-12-20130110-01	Water	01/10/13 08:55	01/11/13 08:00
480-31428-6	MW-261S-20130110-01	Water	01/10/13 10:35	01/11/13 08:00
480-31428-7	MW-265M-20130110-01	Water	01/10/13 12:10	01/11/13 08:00
480-31428-8	MW-552-20130110-01	Water	01/10/13 09:45	01/11/13 08:00
480-31428-9	MW-562-20130110-01	Water	01/10/13 11:25	01/11/13 08:00
480-31428-10	MW-563-20130110-01	Water	01/10/13 09:00	01/11/13 08:00
480-31428-11	DUP-X-20130110-01	Water	01/10/13 00:00	01/11/13 08:00
480-31428-12	Trip Blanks	Water	01/10/13 00:00	01/11/13 08:00

TestAmerica Westfield
Westfield Executive Park 53 Southampton Road
Westfield, MA 01085
Phone (413) 572-4000 Fax (413) 572-3707

Boston Service Center
240 Bear Hill Rd. Suite 104
Waltham, MA 02451
Phone (781) 466-6900 Fax (781) 466-6901

Chain of Custody Record

TestAmerica
THE LEADER IN ENVIRONMENTAL TESTING

Client Information	Sampler: Dwy Jones Dennis Bolls	Lab PM	Carrier Tracking No(s)	COC No: 22437
Client Contact: Vicki Parkyn	Phone: same	E-Mail: same		Page: 1 of 2
Company: Integrated Engineering Solutions Inc				Job #
Address: 25 Spring St	Due Date Requested: 1/24/13			
City: Wilpole	TAT Requested (days):			
State, Zip: MA 02081				
Phone: 508-668-0033	Quote #			
Email: vparkyn@IESonline.com	PO # RA-008			
Project Name/number: RA-008	WO #			
Site: Raytheon - Wayland	SSOW#			

Analysis Requested

Preservation Codes:
A - HCL; B - NaOH; C - Zn Acetate; D - Nitric Acid; E - NaHSO4; F - MeOH; H - Ascorbic Acid; I - Ice; J - DI Water; M - Hexane; N - None; P - Na2O4S; Q - Na2SO3; R - Na2S2SO3; S - H2SO4; Z - other (specify)

Regulatory programs: MCP ☐ GW1/S1 ☒; RCP ☐ CT RSR ☐; DEP Form ☐ EDD Required ☐

Sample Identification	Sample Date	Sample Time	Sample Type (C=comp, G=grab)	Matrix (W=water, S=solid, O=waste/oil, BT=Tissue, A=Air)	Sampler's Initials	Field Filtered Sample?	Perform MS/MSD?	8260C	Total Number of containers	Special Instructions/Note:
			Preservation Code:					A+		
REW-1-20130110-01	1/10/13	1150	G	W	DJ			X	3	
REW-6-20130110-01	1/10/13	0950	G	W	DJ			X	3	
REW-7-20130110-01	1/10/13	1110	G	W	DJ			X	3	
REW-8-20130110-01	1/10/13	1030	G	W	DJ			X	3	
REW-12-20130110-01	1/10/13	0855	G	W	DJ			X	3	
MW-361S-20130110-01	1/10/13	1035	G	W				X	3	
MW-365M-20130110-01	1/10/13	1210	G	W				X	3	
MW-552-20130110-01	1/10/13	0945	G	W				X	3	
MW-562-20130110-01	1/10/13	1125	G	W				X	3	
MW-563-20130110-01	1/10/13	0900	G	W				X	3	

Possible Hazard Identification
☒ Non-Hazard ☐ Flammable ☐ Skin Irritant ☐ Poison B ☐ Unknown ☐ Radiological

Sample Disposal (~~A fee may be assessed if samples are retained longer than 1 month~~)
☐ Return To Client ☒ Disposal By Lab ☐ Archive For ____ Months

Deliverable Requested: I, II, III, IV, Other (specify)

Special Instructions/QC Requirements:

Relinquished by	Date/Time	Company	Received by	Date/Time	Company
[signature]	1/10/13 1330	IESI	[signature]	1/10/13 1400	TAL
[signature]	1/10/13 1630	TAL	[signature]	1/11/13 0800	

Custody Seals Intact: ☐ Yes ☐ No
Custody Seal No.:
Cooler Temperature(s) °C and Other Remarks: 4/1 #3

TAL-8245-360 1111

TestAmerica Westfield
Westfield Executive Park 53 Southampton Road
Westfield, MA 01085
Phone (413) 572-4000 Fax (413) 572-3707

Boston Service Center
240 Bear Hill Rd Suite 104
Waltham, MA 02451
Phone (781) 466-6900 Fax (781) 466-6901

Chain of Custody Record

TestAmerica
THE LEADER IN ENVIRONMENTAL TESTING

Client Information				
Sampler: Dwayne Rollo	Lab PM:	Carrier Tracking No(s):	COC No: 22436	
Client Contact: Vicki Partyka	Phone: same	E-Mail: same	Page: 2 of 2	
Company: Investigative Engineering Solutions Inc			Job #	
Address: 23 Spring St	Due Date Requested: 1/24/13			
City: Walpole	TAT Requested (days):			
State, Zip: MA 02081				
Phone: 508-668-0033	Quote #			
Email: vpartyka@IESonline.com	PO #: RA-008			
Project Name/number: RA-008	WO #			
Site: Raytheon Wayland	SSOW#			

Analysis Requested

Sample Identification	Sample Date	Sample Time	Sample Type (C=comp, G=grab)	Matrix (W=water, S=solid, O=waste/oil BT=Tissue A=Air)	Sampler's Initials	Field Filtered Sample?	Perform MS/MSD?	8260C	Total Number of containers	Special Instructions/Note:
			Preservation Code:							
Dup X-30130110-01	—	—	C	W	—			X		
Trip Blanks	—	—	—	W				X		

Preservation Codes:
A - HCL; B - NaOH; C - Zn Acetate; D - Nitric Acid; E - NaHSO4; F - MeOH; H - Ascorbic Acid; I - Ice; J - DI Water; M - Hexane; N - None; P - Na2O4S; Q - Na2SO3; R - Na2S2SO3; S - H2SO4; Z - other (specify)

Regulatory programs:
MCP ☐ GW1/S1 ☒
RCP ☐ CT RSR ☐
DEP Form ☐ EDD Required ☐

Possible Hazard Identification
☒ Non-Hazard ☐ Flammable ☐ Skin Irritant ☐ Poison B ☐ Unknown ☐ Radiological

Sample Disposal (A fee may be assessed if samples are retained longer than 1 month)
☐ Return To Client ☒ Disposal By Lab ☐ Archive For ____ Months

Deliverable Requested: I, II, III, IV, Other (specify)

Special Instructions/QC Requirements:

Relinquished by	Date/Time	Company	Received by	Date/Time	Company
[signature]	1/10/13 1320	IES	[signature]	1/10/13 1400	TAL
[signature]	1/10/13 1630	TAL	[signature]	1/11/13 0800	
Relinquished by	Date/Time	Company	Received by	Date/Time	Company

Custody Seals Intact: ☐ Yes ☐ No
Custody Seal No.:
Cooler Temperature(s) °C and Other Remarks: Cl # 5

TAL-8245-360 1111

Login Sample Receipt Checklist

Client: Innovative Engineering Solutions, Inc

Job Number: 480-31428-1

Login Number: 31428
List Number: 1
Creator: Janish, Carl

List Source: TestAmerica Buffalo

Question	Answer	Comment
Radioactivity wasn't checked or is </= background as measured by a survey meter.		
The cooler's custody seal, if present, is intact.		
The cooler or samples do not appear to have been compromised or tampered with.		
Samples were received on ice.		
Cooler Temperature is acceptable.		
Cooler Temperature is recorded.		
COC is present.		
COC is filled out in ink and legible.		
COC is filled out with all pertinent information.		
Is the Field Sampler's name present on COC?		
There are no discrepancies between the sample IDs on the containers and the COC.		
Samples are received within Holding Time.		
Sample containers have legible labels.		
Containers are not broken or leaking.		
Sample collection date/times are provided.		
Appropriate sample containers are used.		
Sample bottles are completely filled.		
Sample Preservation Verified		
There is sufficient vol. for all requested analyses, incl. any requested MS/MSDs		
Containers requiring zero headspace have no headspace or bubble is <6mm (1/4").		
If necessary, staff have been informed of any short hold time or quick TAT needs		
Multiphasic samples are not present.		
Samples do not require splitting or compositing.		

Login Sample Receipt Checklist

Client: Innovative Engineering Solutions, Inc

Job Number: 480-31428-1

Login Number: 31428
List Number: 2
Creator: Janish, Carl

List Source: TestAmerica Buffalo

Question	Answer	Comment
Radioactivity either was not measured or, if measured, is at or below background	True	
The cooler's custody seal, if present, is intact.	True	
The cooler or samples do not appear to have been compromised or tampered with.	True	
Samples were received on ice.	True	
Cooler Temperature is acceptable.	True	
Cooler Temperature is recorded.	True	
COC is present.	True	
COC is filled out in ink and legible.	True	
COC is filled out with all pertinent information.	True	
Is the Field Sampler's name present on COC?	True	
There are no discrepancies between the sample IDs on the containers and the COC.	True	
Samples are received within Holding Time.	True	
Sample containers have legible labels.	True	
Containers are not broken or leaking.	True	
Sample collection date/times are provided.	True	
Appropriate sample containers are used.	True	
Sample bottles are completely filled.	True	
Sample Preservation Verified	True	
There is sufficient vol. for all requested analyses, incl. any requested MS/MSDs	True	
VOA sample vials do not have headspace or bubble is <6mm (1/4") in diameter.	True	
If necessary, staff have been informed of any short hold time or quick TAT needs	True	
Multiphasic samples are not present.	True	
Samples do not require splitting or compositing.	True	
Sampling Company provided.	True	iesi
Samples received within 48 hours of sampling.	True	
Samples requiring field filtration have been filtered in the field.	N/A	
Chlorine Residual checked.	N/A	

TestAmerica

THE LEADER IN ENVIRONMENTAL TESTING

ANALYTICAL REPORT

TestAmerica Laboratories, Inc.
TestAmerica Buffalo
10 Hazelwood Drive
Amherst, NY 14228-2298
Tel: (716)691-2600

TestAmerica Job ID: 480-35387-1
Client Project/Site: IDS Wayland

For:
Innovative Engineering Solutions, Inc
25 Spring Street
Walpole, Massachusetts 02081

Attn: Vicki Pariyar

Authorized for release by:
4/9/2013 11:46:00 AM

Becky Mason
Project Manager II
becky.mason@testamericainc.com

LINKS

Review your project results through TotalAccess

Have a Question? Ask The Expert

Visit us at: www.testamericainc.com

The test results in this report meet all 2003 NELAC and 2009 TNI requirements for accredited parameters, exceptions are noted in this report. This report may not be reproduced except in full, and with written approval from the laboratory. For questions please contact the Project Manager at the e-mail address or telephone number listed on this page.

This report has been electronically signed and authorized by the signatory. Electronic signature is intended to be the legally binding equivalent of a traditionally handwritten signature.

Results relate only to the items tested and the sample(s) as received by the laboratory.

Table of Contents

Cover Page 1
Table of Contents 2
Definitions/Glossary 3
Case Narrative 4
Detection Summary 7
Client Sample Results 12
Surrogate Summary 75
QC Sample Results 77
QC Association Summary 102
Lab Chronicle 104
Certification Summary 111
Method Summary 112
Sample Summary 113
Chain of Custody 114
Receipt Checklists 118

Qualifiers

GC/MS VOA

Qualifier	Qualifier Description
*	LCS or LCSD exceeds the control limits
X	Surrogate is outside control limits
F	MS or MSD exceeds the control limits

Glossary

Abbreviation	These commonly used abbreviations may or may not be present in this report.
¤	Listed under the "D" column to designate that the result is reported on a dry weight basis
%R	Percent Recovery
CNF	Contains no Free Liquid
DER	Duplicate error ratio (normalized absolute difference)
DL, RA, RE, IN	Indicates a Dilution, Re-analysis, Re-extraction, or additional Initial metals/anion analysis of the sample
DLC	Decision level concentration
MDA	Minimum detectable activity
EDL	Estimated Detection Limit
MDC	Minimum detectable concentration
MDL	Method Detection Limit
ML	Minimum Level (Dioxin)
ND	Not detected at the reporting limit (or MDL or EDL if shown)
PQL	Practical Quantitation Limit
QC	Quality Control
RER	Relative error ratio
RL	Reporting Limit or Requested Limit (Radiochemistry)
RPD	Relative Percent Difference, a measure of the relative difference between two points
TEF	Toxicity Equivalent Factor (Dioxin)
TEQ	Toxicity Equivalent Quotient (Dioxin)

Job ID: 480-35387-1

Laboratory: TestAmerica Buffalo

Narrative

CASE NARRATIVE

Client: Innovative Engineering Solutions, Inc

Project: IDS Wayland

Report Number: 480-35387-1

With the exceptions noted as flags or footnotes, standard analytical protocols were followed in the analysis of the samples and no problems were encountered or anomalies observed. In addition all laboratory quality control samples were within established control limits, with any exceptions noted below. Each sample was analyzed to achieve the lowest possible reporting limit within the constraints of the method. In some cases, due to interference or analytes present at high concentrations, samples were diluted. For diluted samples, the reporting limits are adjusted relative to the dilution required.

Calculations are performed before rounding to avoid round-off errors in calculated results.

All holding times were met and proper preservation noted for the methods performed on these samples, unless otherwise detailed in the individual sections below.

RECEIPT
The samples were received on 04/02/2013; the samples arrived in good condition, properly preserved and on ice. The temperature of the coolers at receipt was 3.0 C.

Note: All samples that require thermal preservation are considered acceptable if the arrival temperature is within the method's specified temperature range or for general analysis, ranging from 6°C to just above the freezing temperature of water. Samples that are hand delivered, immediately following collection, may not meet these criteria; however, they will be considered acceptable according to NELAC and State standards, if there is evidence that the chilling process has begun, such as stored and transported to the laboratory on ice.

VOLATILE ORGANIC COMPOUNDS (GC-MS SIM)
Samples MW-261S-2013 0401 (480-35387-3), MW-265M-2013 0329-01 (480-35387-7), MW-266Ma-2013 0329-01 (480-35387-9), MW-267S-2013 0329-01 (480-35387-11), MW-268M-2013 0329-01 (480-35387-13), MW-269Ma-2013 0329-01 (480-35387-15), MW-552-2013 0329-01 (480-35387-17), DUPX2-2013 0329-01 (480-35387-34) and Trip Blank (480-35387-36) were analyzed for volatile organic compounds (GC-MS SIM) in accordance with EPA SW-846 Method 8260B SIM. The samples were analyzed on 04/03/2013.

Surrogate recovery for the following sample was outside control limits: MW-552-2013 0329-01 (480-35387-17). Evidence of matrix interference is present; therefore, re-extraction and/or re-analysis was not performed.

Samples MW-261S-2013 0401 (480-35387-3)[4X], MW-265M-2013 0329-01 (480-35387-7)[4X] and MW-552-2013 0329-01 (480-35387-17)[2X] required dilution prior to analysis. The reporting limits have been adjusted accordingly.

No other difficulties were encountered during the VOA SIM analyses.

All other quality control parameters were within the acceptance limits.

VOLATILE ORGANIC COMPOUNDS (GC-MS)
Samples DEP-19M-2013 0401-01 (480-35387-1), DEP-21-2013 0401-01 (480-35387-2), MW-261S-2013 0401 (480-35387-3), MW-263M-2013 0401 (480-35387-4), MW-264M-2013 0401 (480-35387-5), MW-265S-2013 0401 (480-35387-6), MW-265M-2013 0329-01 (480-35387-7), MW-265D-2013 0401-01 (480-35387-8), MW-266Ma-2013 0329-01 (480-35387-9), MW-266Mb-2013 0401-01 (480-35387-10), MW-267S-2013 0329-01 (480-35387-11), MW-267M-2013 0329-01 (480-35387-12), MW-268M-2013 0329-01 (480-35387-13), MW-268D-2013 0401 (480-35387-14), MW-269Ma-2013 0329-01 (480-35387-15), MW-551-2013 0329-01 (480-35387-16), MW-552-2013 0329-01 (480-35387-17), MW-553-2013 0329-01 (480-35387-18), MW-560-2013 0329-01 (480-35387-19),

Job ID: 480-35387-1 (Continued)

Laboratory: TestAmerica Buffalo (Continued)

MW-561-2013 0329-01 (480-35387-20), MW-562-2013 0329-01 (480-35387-21), MW-563-2013 0329-01 (480-35387-22), REW-1-2013 0328-01 (480-35387-23), REW-4-2013 0328-01 (480-35387-24), REW-5-2013 0328-01 (480-35387-25), REW-6-2013 0329-01 (480-35387-26), REW-7-2013 0401-01 (480-35387-27), REW-8-2013 0328-01 (480-35387-28), REW-9-2013 0328-01 (480-35387-29), REW-10-2013 0328-01 (480-35387-30), REW-11-2013 0329-01 (480-35387-31), REW-12-2013 0328-01 (480-35387-32), DUPX1-2013 0328-01 (480-35387-33), DUPX2-2013 0329-01 (480-35387-34), DUPX3-2013 0401-01 (480-35387-35) and Trip Blank (480-35387-36) were analyzed for volatile organic compounds (GC-MS) in accordance with SW846 8260C. The samples were analyzed on 04/04/2013, 04/05/2013 and 04/06/2013.

The following sample(s) was diluted to bring the concentration of target analytes within the calibration range: MW-261S-2013 0401 (480-35387-3), MW-265M-2013 0329-01 (480-35387-7), MW-267M-2013 0329-01 (480-35387-12), MW-551-2013 0329-01 (480-35387-16), MW-553-2013 0329-01 (480-35387-18) (480-35387-7 MS), (480-35387-7 MSD), MW-265M-2013 0329-01 (480-35387-7), MW-267M-2013 0329-01 (480-35387-12), MW-267S-2013 0329-01 (480-35387-11), MW-268M-2013 0329-01 (480-35387-13), MW-551-2013 0329-01 (480-35387-16), MW-552-2013 0329-01 (480-35387-17), MW-553-2013 0329-01 (480-35387-18), MW-561-2013 0329-01 (480-35387-20), MW-562-2013 0329-01 (480-35387-21), REW-4-2013 0328-01 (480-35387-24), MW-563-2013 0329-01 (480-35387-22), REW-1-2013 0328-01 (480-35387-23), REW-4-2013 0328-01 (480-35387-24), REW-5-2013 0328-01 (480-35387-25), REW-6-2013 0329-01 (480-35387-26), REW-7-2013 0401-01 (480-35387-27), REW-8-2013 0328-01 (480-35387-28), REW-9-2013 0328-01 (480-35387-29), DUPX1-2013 0328-01 (480-35387-33), REW-11-2013 0329-01 (480-35387-31), REW-12-2013 0328-01 (480-35387-32) . Elevated reporting limits (RLs) are provided.

The laboratory control sample (LCS) and / or the laboratory control sample duplicate (LCSD) for batch 111019 exceeded control limits for the following analytes: Chloroethane. MCP protocol allows for 10% of the target compounds to be outside of the limits provided the recoveries are over 10%.

The laboratory control sample (LCS) and / or the laboratory control sample duplicate (LCSD) for batch 111260 exceeded control limits for the following analytes: Acetone and Dichlorodifluoromethane. MCP protocol allows for 10% of the target compounds to be outside of the limits provided the recoveries are over 10%.

2,2-Dichloropropane, Acetone and Bromoform failed the recovery criteria low for the MS of sample MW-265M-2013 0329-01MS (480-35387-7) in batch 480-111019.

2,2-Dichloropropane, Acetone and Carbon disulfide failed the recovery criteria low for the MSD of sample MW-265M-2013 0329-01MSD (480-35387-7) in batch 480-111019.

2,2-Dichloropropane and Trichloroethene failed the recovery criteria low for the MS of sample 480-35540-7 in batch 480-111112.

2,2-Dichloropropane, Acetone and Trichloroethene failed the recovery criteria low for the MSD of sample 480-35540-7 in batch 480-111112. Acetone exceeded the rpd limit.

The continuing calibration verification (CCV) for Carbon tetrachloride, Chloroethane, 4-Chlorotoluene, 1.2-Dichloroethane, 1,1,1-Trichloroethane, and 2,2-Dichloropropane associated with batch 111112 recovered above the MCP upper control limit. MCP protocol allows for 20% of the target compounds to be outside the 20% difference but not over 40% difference.

The continuing calibration verification (CCV) for 2-Hexanone, Acetone, Dichlorodifluoromethane, 1,2-Dichloroethane, and 4-Methyl-2-pentanone (MIBK) associated with batch 111260 recovered above the MCP upper control limit. MCP protocol allows for 20% of the target compounds to be outside the 20% difference but not over 40% difference.

The continuing calibration verification (CCV) for 1,2-Dichloroethane and 4-Chlorotoluene associated with batch 110854 recovered above the MCP upper control limit. MCP protocol allows for 20% of the target compounds to be outside the 20% difference but not over 40% difference.

No other difficulties were encountered during the volatile organic compounds (GC-MS) analyses.

All other quality control parameters were within the acceptance limits.

MassDEP Analytical Protocol Certification Form

Laboratory Name: **TestAmerica Buffalo** Project #: **480-35387-1**

Project Location: **IDS Wayland** RTN:

This form provides certifications for the following data set: list Laboratory Sample ID Number(s):

480-35381-1[1-36]

Matrices: [X] Groundwater/Surface Water [ ] Soil/Sediment [ ] Drinking Water [ ] Air [ ] Other:

CAM Protocols (check all that apply below):

8260 VOC CAM II A [X]	7470/7471 Hg CAM III B [ ]	Mass DEP VPH CAM IV A [ ]	8081 Pesticides CAM V B [ ]	7196 Hex Cr CAM VI B [ ]	Mass DEP APH CAM IX A [ ]
8270 SVOC CAM II B [ ]	6010 Metals CAM III C [ ]	Mass DEP EPH CAM IV B [ ]	8151 Herbicides CAM V C [ ]	8330 Explosives CAM VIII A [ ]	TO-15 VOC CAM IX B [ ]
6010 Metals CAM III A [ ]	6020 Metals CAM III D [ ]	8082 PCB CAM V A [ ]	9014 Total Cyanide/PAC CAM VI A [ ]	6860 Perchlorate CAM VIII B [ ]	

Affirmative Responses to Questions A through F are required for "Presumptive Certainty" status

A	Were all samples received in a condition consistent with those described on the Chain-of-Custody, properly preserved (including temperature) in the field or laboratory, and prepared/analyzed within method holding time.	[X] Yes [ ] No
B	Were the analytical method(s) and all associated QC requirements specified in the selected CAM protocol(s) followed?	[X] Yes [ ] No
C	Were all required corrective actions and analytical response actions specified in the selected CAM protocol(s) implemented for all identified performance standard non-conformances?	[X] Yes [ ] No
D	Does the laboratory report comply with all the reporting requirements specified in CAM VII A, "Quality Assurance and Quality Control Guidelines for the Acquisition and Reporting of Analytical Data"?	[X] Yes [ ] No
E	a. VPH, EPH and APH Methods only: Was each method conducted without significant modification(s)? (Refer to the individual method(s) for a list of significant modifications). b. APH and TO-15 Methods only: Was the complete analyte list reported for each method?	[ ] Yes [ ] No [ ] Yes [ ] No
F	Were all applicable CAM protocol QC and performance standard non-conformances identified and evaluated in a laboratory narrative (including all "No" responses to Questions A through E)?	[X] Yes [ ] No

Responses to Questions G, H and I below are required for "Presumptive Certainty" status

G	Were the reporting limits at or below all CAM reporting limits specified in the selected CAM protocol(s)?	[ ] Yes [X] No[1]

***Data User Note:* Data that achieve "Presumptive Certainty" status may not necessarily meet the data usability and representativeness requirements described in 310 CMR 40. 1056 (2)(k) and WCS-07-350**

H	Were **all** QC performance standards specified in the CAM protocol(s) achieved?	[ ] Yes [X] No[1]
I	Were results reported for the complete analyte list specified in the selected CAM protocol(s) ?	[X] Yes [ ] No[1]

[1] All negative responses must be addressed in an attached laboratory narrative.

I, the undersigned, attest under the pains and penalties of perjury that, based upon my personal inquiry of those responsible for obtaining the information, the material contained in this analytical report is, to the best of my knowledge and belief, is accurate and complete.

Signature: Position: Project Manager

Printed Name: Becky Mason Date: 4/9/13 11:44

This form has been electronically signed and approved

Detection Summary

Client: Innovative Engineering Solutions, Inc
Project/Site: IDS Wayland

TestAmerica Job ID: 480-35387-1

Client Sample ID: DEP-19M-2013 0401-01 — Lab Sample ID: 480-35387-1

No Detections.

Client Sample ID: DEP-21-2013 0401-01 — Lab Sample ID: 480-35387-2

Analyte	Result	Qualifier	RL	MDL	Unit	Dil Fac	D	Method	Prep Type
cis-1,2-Dichloroethene	4.8		1.0		ug/L	1		8260C	Total/NA
Trichloroethene	1.2		1.0		ug/L	1		8260C	Total/NA

Client Sample ID: MW-261S-2013 0401 — Lab Sample ID: 480-35387-3

Analyte	Result	Qualifier	RL	MDL	Unit	Dil Fac	D	Method	Prep Type
Acetone	52000		10000		ug/L	200		8260C	Total/NA

Client Sample ID: MW-263M-2013 0401 — Lab Sample ID: 480-35387-4

No Detections.

Client Sample ID: MW-264M-2013 0401 — Lab Sample ID: 480-35387-5

Analyte	Result	Qualifier	RL	MDL	Unit	Dil Fac	D	Method	Prep Type
cis-1,2-Dichloroethene	6.2		1.0		ug/L	1		8260C	Total/NA
Tetrachloroethene	1.5		1.0		ug/L	1		8260C	Total/NA
Trichloroethene	8.6		1.0		ug/L	1		8260C	Total/NA

Client Sample ID: MW-265S-2013 0401 — Lab Sample ID: 480-35387-6

No Detections.

Client Sample ID: MW-265M-2013 0329-01 — Lab Sample ID: 480-35387-7

Analyte	Result	Qualifier	RL	MDL	Unit	Dil Fac	D	Method	Prep Type
2-Butanone (MEK)	110		100		ug/L	10		8260C	Total/NA
cis-1,2-Dichloroethene	32		10		ug/L	10		8260C	Total/NA
Vinyl chloride	26		10		ug/L	10		8260C	Total/NA
Acetone - DL	7500		1300		ug/L	25		8260C	Total/NA

Client Sample ID: MW-265D-2013 0401-01 — Lab Sample ID: 480-35387-8

No Detections.

Client Sample ID: MW-266Ma-2013 0329-01 — Lab Sample ID: 480-35387-9

Analyte	Result	Qualifier	RL	MDL	Unit	Dil Fac	D	Method	Prep Type
1,4-Dioxane	6.2		1.6		ug/L	1		8260B SIM	Total/NA
cis-1,2-Dichloroethene	9.1		1.0		ug/L	1		8260C	Total/NA
Trichloroethene	27		1.0		ug/L	1		8260C	Total/NA

Client Sample ID: MW-266Mb-2013 0401-01 — Lab Sample ID: 480-35387-10

Analyte	Result	Qualifier	RL	MDL	Unit	Dil Fac	D	Method	Prep Type
cis-1,2-Dichloroethene	80		1.0		ug/L	1		8260C	Total/NA
Tetrachloroethene	13		1.0		ug/L	1		8260C	Total/NA

This Detection Summary does not include radiochemical test results.

Client Sample ID: MW-266Mb-2013 0401-01 (Continued) — Lab Sample ID: 480-35387-10

Analyte	Result	Qualifier	RL	MDL	Unit	Dil Fac	D	Method	Prep Type
Trichloroethene	53		1.0		ug/L	1		8260C	Total/NA
Vinyl chloride	7.5		1.0		ug/L	1		8260C	Total/NA

Client Sample ID: MW-267S-2013 0329-01 — Lab Sample ID: 480-35387-11

Analyte	Result	Qualifier	RL	MDL	Unit	Dil Fac	D	Method	Prep Type
1,4-Dioxane	7.4		1.6		ug/L	1		8260B SIM	Total/NA
cis-1,2-Dichloroethene	72		5.0		ug/L	5		8260C	Total/NA
Tetrachloroethene	7.6		5.0		ug/L	5		8260C	Total/NA
Trichloroethene	370		5.0		ug/L	5		8260C	Total/NA

Client Sample ID: MW-267M-2013 0329-01 — Lab Sample ID: 480-35387-12

Analyte	Result	Qualifier	RL	MDL	Unit	Dil Fac	D	Method	Prep Type
Tetrachloroethene	14		5.0		ug/L	5		8260C	Total/NA
Trichloroethene	350		5.0		ug/L	5		8260C	Total/NA
Vinyl chloride	20		5.0		ug/L	5		8260C	Total/NA
cis-1,2-Dichloroethene - DL	590		10		ug/L	10		8260C	Total/NA

Client Sample ID: MW-268M-2013 0329-01 — Lab Sample ID: 480-35387-13

Analyte	Result	Qualifier	RL	MDL	Unit	Dil Fac	D	Method	Prep Type
1,4-Dioxane	14		1.6		ug/L	1		8260B SIM	Total/NA
cis-1,2-Dichloroethene	2100		25		ug/L	25		8260C	Total/NA
Tetrachloroethene	42		25		ug/L	25		8260C	Total/NA
Trichloroethene	1100		25		ug/L	25		8260C	Total/NA
Vinyl chloride	91		25		ug/L	25		8260C	Total/NA

Client Sample ID: MW-268D-2013 0401 — Lab Sample ID: 480-35387-14

Analyte	Result	Qualifier	RL	MDL	Unit	Dil Fac	D	Method	Prep Type
cis-1,2-Dichloroethene	9.3		1.0		ug/L	1		8260C	Total/NA
Trichloroethene	6.3		1.0		ug/L	1		8260C	Total/NA

Client Sample ID: MW-269Ma-2013 0329-01 — Lab Sample ID: 480-35387-15

Analyte	Result	Qualifier	RL	MDL	Unit	Dil Fac	D	Method	Prep Type
1,4-Dioxane	2.0		1.6		ug/L	1		8260B SIM	Total/NA
cis-1,2-Dichloroethene	2.2		1.0		ug/L	1		8260C	Total/NA
Trichloroethene	1.0		1.0		ug/L	1		8260C	Total/NA

Client Sample ID: MW-551-2013 0329-01 — Lab Sample ID: 480-35387-16

Analyte	Result	Qualifier	RL	MDL	Unit	Dil Fac	D	Method	Prep Type
cis-1,2-Dichloroethene	240		100		ug/L	100		8260C	Total/NA
Vinyl chloride	130		100		ug/L	100		8260C	Total/NA
Acetone - DL	130000		20000		ug/L	400		8260C	Total/NA

Client Sample ID: MW-552-2013 0329-01 — Lab Sample ID: 480-35387-17

This Detection Summary does not include radiochemical test results.

Client Sample ID: MW-552-2013 0329-01 (Continued) — Lab Sample ID: 480-35387-17

Analyte	Result	Qualifier	RL	MDL	Unit	Dil Fac	D	Method	Prep Type
1,4-Dioxane	3.7		3.2		ug/L	2		8260B SIM	Total/NA
Acetone	2900		400		ug/L	8		8260C	Total/NA
cis-1,2-Dichloroethene	320		8.0		ug/L	8		8260C	Total/NA
Trichloroethene	39		8.0		ug/L	8		8260C	Total/NA
Vinyl chloride	260		8.0		ug/L	8		8260C	Total/NA

Client Sample ID: MW-553-2013 0329-01 — Lab Sample ID: 480-35387-18

Analyte	Result	Qualifier	RL	MDL	Unit	Dil Fac	D	Method	Prep Type
Acetone - DL	130000		20000		ug/L	400		8260C	Total/NA

Client Sample ID: MW-560-2013 0329-01 — Lab Sample ID: 480-35387-19

Analyte	Result	Qualifier	RL	MDL	Unit	Dil Fac	D	Method	Prep Type
cis-1,2-Dichloroethene	16		1.0		ug/L	1		8260C	Total/NA
Trichloroethene	3.3		1.0		ug/L	1		8260C	Total/NA
Vinyl chloride	1.4		1.0		ug/L	1		8260C	Total/NA

Client Sample ID: MW-561-2013 0329-01 — Lab Sample ID: 480-35387-20

Analyte	Result	Qualifier	RL	MDL	Unit	Dil Fac	D	Method	Prep Type
cis-1,2-Dichloroethene	220		5.0		ug/L	5		8260C	Total/NA
trans-1,2-Dichloroethene	20		5.0		ug/L	5		8260C	Total/NA
Trichloroethene	96		5.0		ug/L	5		8260C	Total/NA
Vinyl chloride	310		5.0		ug/L	5		8260C	Total/NA

Client Sample ID: MW-562-2013 0329-01 — Lab Sample ID: 480-35387-21

Analyte	Result	Qualifier	RL	MDL	Unit	Dil Fac	D	Method	Prep Type
2-Butanone (MEK)	540		40		ug/L	4		8260C	Total/NA
Acetone	930		200		ug/L	4		8260C	Total/NA

Client Sample ID: MW-563-2013 0329-01 — Lab Sample ID: 480-35387-22

Analyte	Result	Qualifier	RL	MDL	Unit	Dil Fac	D	Method	Prep Type
cis-1,2-Dichloroethene	420		10		ug/L	10		8260C	Total/NA
Vinyl chloride	91		10		ug/L	10		8260C	Total/NA

Client Sample ID: REW-1-2013 0328-01 — Lab Sample ID: 480-35387-23

Analyte	Result	Qualifier	RL	MDL	Unit	Dil Fac	D	Method	Prep Type
Acetone	24000		2500		ug/L	50		8260C	Total/NA
cis-1,2-Dichloroethene	81		50		ug/L	50		8260C	Total/NA

Client Sample ID: REW-4-2013 0328-01 — Lab Sample ID: 480-35387-24

Analyte	Result	Qualifier	RL	MDL	Unit	Dil Fac	D	Method	Prep Type
2-Butanone (MEK)	81		50		ug/L	5		8260C	Total/NA
cis-1,2-Dichloroethene	41		5.0		ug/L	5		8260C	Total/NA
Vinyl chloride	31		5.0		ug/L	5		8260C	Total/NA

This Detection Summary does not include radiochemical test results.

Client Sample ID: REW-4-2013 0328-01 (Continued) — Lab Sample ID: 480-35387-24

Analyte	Result	Qualifier	RL	MDL	Unit	Dil Fac	D	Method	Prep Type
Acetone - DL	4400		500		ug/L	10		8260C	Total/NA

Client Sample ID: REW-5-2013 0328-01 — Lab Sample ID: 480-35387-25

Analyte	Result	Qualifier	RL	MDL	Unit	Dil Fac	D	Method	Prep Type
Acetone	4800		500		ug/L	10		8260C	Total/NA
cis-1,2-Dichloroethene	290		10		ug/L	10		8260C	Total/NA
Trichloroethene	93		10		ug/L	10		8260C	Total/NA
Vinyl chloride	44		10		ug/L	10		8260C	Total/NA

Client Sample ID: REW-6-2013 0329-01 — Lab Sample ID: 480-35387-26

Analyte	Result	Qualifier	RL	MDL	Unit	Dil Fac	D	Method	Prep Type
cis-1,2-Dichloroethene	420		10		ug/L	10		8260C	Total/NA
Tetrachloroethene	18		10		ug/L	10		8260C	Total/NA
Trichloroethene	510		10		ug/L	10		8260C	Total/NA
Vinyl chloride	17		10		ug/L	10		8260C	Total/NA

Client Sample ID: REW-7-2013 0401-01 — Lab Sample ID: 480-35387-27

Analyte	Result	Qualifier	RL	MDL	Unit	Dil Fac	D	Method	Prep Type
cis-1,2-Dichloroethene	920		10		ug/L	10		8260C	Total/NA
Trichloroethene	300		10		ug/L	10		8260C	Total/NA
Vinyl chloride	130		10		ug/L	10		8260C	Total/NA

Client Sample ID: REW-8-2013 0328-01 — Lab Sample ID: 480-35387-28

Analyte	Result	Qualifier	RL	MDL	Unit	Dil Fac	D	Method	Prep Type
cis-1,2-Dichloroethene	410		10		ug/L	10		8260C	Total/NA
Trichloroethene	300		10		ug/L	10		8260C	Total/NA
Vinyl chloride	72		10		ug/L	10		8260C	Total/NA

Client Sample ID: REW-9-2013 0328-01 — Lab Sample ID: 480-35387-29

Analyte	Result	Qualifier	RL	MDL	Unit	Dil Fac	D	Method	Prep Type
cis-1,2-Dichloroethene	34		1.0		ug/L	1		8260C	Total/NA
Trichloroethene	7.9		1.0		ug/L	1		8260C	Total/NA
Vinyl chloride	4.2		1.0		ug/L	1		8260C	Total/NA

Client Sample ID: REW-10-2013 0328-01 — Lab Sample ID: 480-35387-30

Analyte	Result	Qualifier	RL	MDL	Unit	Dil Fac	D	Method	Prep Type
cis-1,2-Dichloroethene	10		1.0		ug/L	1		8260C	Total/NA
Trichloroethene	3.5		1.0		ug/L	1		8260C	Total/NA

Client Sample ID: REW-11-2013 0329-01 — Lab Sample ID: 480-35387-31

Analyte	Result	Qualifier	RL	MDL	Unit	Dil Fac	D	Method	Prep Type
1,1-Dichloroethane	4.8		1.0		ug/L	1		8260C	Total/NA
1,1-Dichloroethene	2.1		1.0		ug/L	1		8260C	Total/NA

This Detection Summary does not include radiochemical test results.

Detection Summary

Client: Innovative Engineering Solutions, Inc
Project/Site: IDS Wayland

TestAmerica Job ID: 480-35387-1

Client Sample ID: REW-11-2013 0329-01 (Continued) — Lab Sample ID: 480-35387-31

Analyte	Result	Qualifier	RL	MDL	Unit	Dil Fac	D	Method	Prep Type
1,2,4-Trimethylbenzene	1.1		1.0		ug/L	1		8260C	Total/NA
Benzene	1.4		1.0		ug/L	1		8260C	Total/NA
o-Xylene	1.7		1.0		ug/L	1		8260C	Total/NA
Tetrachloroethene	22		1.0		ug/L	1		8260C	Total/NA
trans-1,2-Dichloroethene	2.7		1.0		ug/L	1		8260C	Total/NA
Vinyl chloride	45		1.0		ug/L	1		8260C	Total/NA
cis-1,2-Dichloroethene - DL	1400		25		ug/L	25		8260C	Total/NA
Trichloroethene - DL	410		25		ug/L	25		8260C	Total/NA

Client Sample ID: REW-12-2013 0328-01 — Lab Sample ID: 480-35387-32

Analyte	Result	Qualifier	RL	MDL	Unit	Dil Fac	D	Method	Prep Type
1,1-Dichloroethane	1.3		1.0		ug/L	1		8260C	Total/NA
Tetrachloroethene	10		1.0		ug/L	1		8260C	Total/NA
trans-1,2-Dichloroethene	1.0		1.0		ug/L	1		8260C	Total/NA
Vinyl chloride	23		1.0		ug/L	1		8260C	Total/NA
cis-1,2-Dichloroethene - DL	280		4.0		ug/L	4		8260C	Total/NA
Trichloroethene - DL	180		4.0		ug/L	4		8260C	Total/NA

Client Sample ID: DUPX1-2013 0328-01 — Lab Sample ID: 480-35387-33

Analyte	Result	Qualifier	RL	MDL	Unit	Dil Fac	D	Method	Prep Type
cis-1,2-Dichloroethene	390		5.0		ug/L	5		8260C	Total/NA
trans-1,2-Dichloroethene	7.9		5.0		ug/L	5		8260C	Total/NA
Trichloroethene	280		5.0		ug/L	5		8260C	Total/NA
Vinyl chloride	70		5.0		ug/L	5		8260C	Total/NA

Client Sample ID: DUPX2-2013 0329-01 — Lab Sample ID: 480-35387-34

Analyte	Result	Qualifier	RL	MDL	Unit	Dil Fac	D	Method	Prep Type
1,4-Dioxane	6.0		1.6		ug/L	1		8260B SIM	Total/NA
cis-1,2-Dichloroethene	9.2		1.0		ug/L	1		8260C	Total/NA
Trichloroethene	27		1.0		ug/L	1		8260C	Total/NA

Client Sample ID: DUPX3-2013 0401-01 — Lab Sample ID: 480-35387-35

No Detections.

Client Sample ID: Trip Blank — Lab Sample ID: 480-35387-36

No Detections.

This Detection Summary does not include radiochemical test results.

Client: Innovative Engineering Solutions, Inc
Project/Site: IDS Wayland

TestAmerica Job ID: 480-35387-1

Client Sample ID: DEP-19M-2013 0401-01
Date Collected: 04/01/13 12:40
Date Received: 04/02/13 01:40

Lab Sample ID: 480-35387-1
Matrix: Water

Method: 8260C - Volatile Organic Compounds (GC/MS)

Analyte	Result	Qualifier	RL	MDL	Unit	D	Prepared	Analyzed	Dil Fac
1,1,1,2-Tetrachloroethane	ND		1.0		ug/L			04/04/13 12:37	1
1,1,1-Trichloroethane	ND		1.0		ug/L			04/04/13 12:37	1
1,1,2,2-Tetrachloroethane	ND		0.50		ug/L			04/04/13 12:37	1
1,1,2-Trichloroethane	ND		1.0		ug/L			04/04/13 12:37	1
1,1-Dichloroethane	ND		1.0		ug/L			04/04/13 12:37	1
1,1-Dichloroethene	ND		1.0		ug/L			04/04/13 12:37	1
1,1-Dichloropropene	ND		1.0		ug/L			04/04/13 12:37	1
1,2,3-Trichlorobenzene	ND		1.0		ug/L			04/04/13 12:37	1
1,2,3-Trichloropropane	ND		1.0		ug/L			04/04/13 12:37	1
1,2,4-Trichlorobenzene	ND		1.0		ug/L			04/04/13 12:37	1
1,2,4-Trimethylbenzene	ND		1.0		ug/L			04/04/13 12:37	1
1,2-Dibromo-3-Chloropropane	ND		5.0		ug/L			04/04/13 12:37	1
1,2-Dichlorobenzene	ND		1.0		ug/L			04/04/13 12:37	1
1,2-Dichloroethane	ND		1.0		ug/L			04/04/13 12:37	1
1,2-Dichloropropane	ND		1.0		ug/L			04/04/13 12:37	1
1,3,5-Trimethylbenzene	ND		1.0		ug/L			04/04/13 12:37	1
1,3-Dichlorobenzene	ND		1.0		ug/L			04/04/13 12:37	1
1,3-Dichloropropane	ND		1.0		ug/L			04/04/13 12:37	1
1,4-Dichlorobenzene	ND		1.0		ug/L			04/04/13 12:37	1
1,4-Dioxane	ND		50		ug/L			04/04/13 12:37	1
2,2-Dichloropropane	ND		1.0		ug/L			04/04/13 12:37	1
2-Butanone (MEK)	ND		10		ug/L			04/04/13 12:37	1
2-Chlorotoluene	ND		1.0		ug/L			04/04/13 12:37	1
2-Hexanone	ND		10		ug/L			04/04/13 12:37	1
4-Chlorotoluene	ND		1.0		ug/L			04/04/13 12:37	1
4-Isopropyltoluene	ND		1.0		ug/L			04/04/13 12:37	1
4-Methyl-2-pentanone (MIBK)	ND		10		ug/L			04/04/13 12:37	1
Acetone	ND		50		ug/L			04/04/13 12:37	1
Benzene	ND		1.0		ug/L			04/04/13 12:37	1
Bromobenzene	ND		1.0		ug/L			04/04/13 12:37	1
Bromoform	ND		1.0		ug/L			04/04/13 12:37	1
Bromomethane	ND		2.0		ug/L			04/04/13 12:37	1
Carbon disulfide	ND		10		ug/L			04/04/13 12:37	1
Carbon tetrachloride	ND		1.0		ug/L			04/04/13 12:37	1
Chlorobenzene	ND		1.0		ug/L			04/04/13 12:37	1
Chlorobromomethane	ND		1.0		ug/L			04/04/13 12:37	1
Chlorodibromomethane	ND		0.50		ug/L			04/04/13 12:37	1
Chloroethane	ND		2.0		ug/L			04/04/13 12:37	1
Chloroform	ND		1.0		ug/L			04/04/13 12:37	1
Chloromethane	ND		2.0		ug/L			04/04/13 12:37	1
cis-1,2-Dichloroethene	ND		1.0		ug/L			04/04/13 12:37	1
cis-1,3-Dichloropropene	ND		0.40		ug/L			04/04/13 12:37	1
Dichlorobromomethane	ND		0.50		ug/L			04/04/13 12:37	1
Dichlorodifluoromethane	ND		1.0		ug/L			04/04/13 12:37	1
Ethyl ether	ND		1.0		ug/L			04/04/13 12:37	1
Ethylbenzene	ND		1.0		ug/L			04/04/13 12:37	1
Ethylene Dibromide	ND		1.0		ug/L			04/04/13 12:37	1
Hexachlorobutadiene	ND		0.40		ug/L			04/04/13 12:37	1
Isopropyl ether	ND		10		ug/L			04/04/13 12:37	1

Client Sample ID: DEP-19M-2013 0401-01

Lab Sample ID: 480-35387-1

Date Collected: 04/01/13 12:40

Matrix: Water

Date Received: 04/02/13 01:40

Method: 8260C - Volatile Organic Compounds (GC/MS) (Continued)

Analyte	Result	Qualifier	RL	MDL	Unit	D	Prepared	Analyzed	Dil Fac
Isopropylbenzene	ND		1.0		ug/L			04/04/13 12:37	1
Methyl tert-butyl ether	ND		1.0		ug/L			04/04/13 12:37	1
Methylene Chloride	ND		1.0		ug/L			04/04/13 12:37	1
m-Xylene & p-Xylene	ND		2.0		ug/L			04/04/13 12:37	1
Naphthalene	ND		5.0		ug/L			04/04/13 12:37	1
n-Butylbenzene	ND		1.0		ug/L			04/04/13 12:37	1
N-Propylbenzene	ND		1.0		ug/L			04/04/13 12:37	1
o-Xylene	ND		1.0		ug/L			04/04/13 12:37	1
sec-Butylbenzene	ND		1.0		ug/L			04/04/13 12:37	1
Styrene	ND		1.0		ug/L			04/04/13 12:37	1
Tert-amyl methyl ether	ND		5.0		ug/L			04/04/13 12:37	1
Tert-butyl ethyl ether	ND		5.0		ug/L			04/04/13 12:37	1
tert-Butylbenzene	ND		1.0		ug/L			04/04/13 12:37	1
Tetrachloroethene	ND		1.0		ug/L			04/04/13 12:37	1
Tetrahydrofuran	ND		10		ug/L			04/04/13 12:37	1
Toluene	ND		1.0		ug/L			04/04/13 12:37	1
trans-1,2-Dichloroethene	ND		1.0		ug/L			04/04/13 12:37	1
trans-1,3-Dichloropropene	ND		0.40		ug/L			04/04/13 12:37	1
Trichloroethene	ND		1.0		ug/L			04/04/13 12:37	1
Trichlorofluoromethane	ND		1.0		ug/L			04/04/13 12:37	1
Vinyl chloride	ND		1.0		ug/L			04/04/13 12:37	1
Dibromomethane	ND		1.0		ug/L			04/04/13 12:37	1

Surrogate	*%Recovery*	*Qualifier*	*Limits*	*Prepared*	*Analyzed*	*Dil Fac*
Toluene-d8 (Surr)	*95*		*70 - 130*		*04/04/13 12:37*	*1*
1,2-Dichloroethane-d4 (Surr)	*87*		*70 - 130*		*04/04/13 12:37*	*1*
4-Bromofluorobenzene (Surr)	*103*		*70 - 130*		*04/04/13 12:37*	*1*

Client Sample ID: DEP-21-2013 0401-01

Lab Sample ID: 480-35387-2

Date Collected: 04/01/13 12:00

Matrix: Water

Date Received: 04/02/13 01:40

Method: 8260C - Volatile Organic Compounds (GC/MS)

Analyte	Result	Qualifier	RL	MDL	Unit	D	Prepared	Analyzed	Dil Fac
1,1,1,2-Tetrachloroethane	ND		1.0		ug/L			04/04/13 13:01	1
1,1,1-Trichloroethane	ND		1.0		ug/L			04/04/13 13:01	1
1,1,2,2-Tetrachloroethane	ND		0.50		ug/L			04/04/13 13:01	1
1,1,2-Trichloroethane	ND		1.0		ug/L			04/04/13 13:01	1
1,1-Dichloroethane	ND		1.0		ug/L			04/04/13 13:01	1
1,1-Dichloroethene	ND		1.0		ug/L			04/04/13 13:01	1
1,1-Dichloropropene	ND		1.0		ug/L			04/04/13 13:01	1
1,2,3-Trichlorobenzene	ND		1.0		ug/L			04/04/13 13:01	1
1,2,3-Trichloropropane	ND		1.0		ug/L			04/04/13 13:01	1
1,2,4-Trichlorobenzene	ND		1.0		ug/L			04/04/13 13:01	1
1,2,4-Trimethylbenzene	ND		1.0		ug/L			04/04/13 13:01	1
1,2-Dibromo-3-Chloropropane	ND		5.0		ug/L			04/04/13 13:01	1
1,2-Dichlorobenzene	ND		1.0		ug/L			04/04/13 13:01	1
1,2-Dichloroethane	ND		1.0		ug/L			04/04/13 13:01	1
1,2-Dichloropropane	ND		1.0		ug/L			04/04/13 13:01	1
1,3,5-Trimethylbenzene	ND		1.0		ug/L			04/04/13 13:01	1

Client Sample ID: DEP-21-2013 0401-01
Date Collected: 04/01/13 12:00
Date Received: 04/02/13 01:40

Lab Sample ID: 480-35387-2
Matrix: Water

Method: 8260C - Volatile Organic Compounds (GC/MS) (Continued)

Analyte	Result	Qualifier	RL	MDL	Unit	D	Prepared	Analyzed	Dil Fac
1,3-Dichlorobenzene	ND		1.0		ug/L			04/04/13 13:01	1
1,3-Dichloropropane	ND		1.0		ug/L			04/04/13 13:01	1
1,4-Dichlorobenzene	ND		1.0		ug/L			04/04/13 13:01	1
1,4-Dioxane	ND		50		ug/L			04/04/13 13:01	1
2,2-Dichloropropane	ND		1.0		ug/L			04/04/13 13:01	1
2-Butanone (MEK)	ND		10		ug/L			04/04/13 13:01	1
2-Chlorotoluene	ND		1.0		ug/L			04/04/13 13:01	1
2-Hexanone	ND		10		ug/L			04/04/13 13:01	1
4-Chlorotoluene	ND		1.0		ug/L			04/04/13 13:01	1
4-Isopropyltoluene	ND		1.0		ug/L			04/04/13 13:01	1
4-Methyl-2-pentanone (MIBK)	ND		10		ug/L			04/04/13 13:01	1
Acetone	ND		50		ug/L			04/04/13 13:01	1
Benzene	ND		1.0		ug/L			04/04/13 13:01	1
Bromobenzene	ND		1.0		ug/L			04/04/13 13:01	1
Bromoform	ND		1.0		ug/L			04/04/13 13:01	1
Bromomethane	ND		2.0		ug/L			04/04/13 13:01	1
Carbon disulfide	ND		10		ug/L			04/04/13 13:01	1
Carbon tetrachloride	ND		1.0		ug/L			04/04/13 13:01	1
Chlorobenzene	ND		1.0		ug/L			04/04/13 13:01	1
Chlorobromomethane	ND		1.0		ug/L			04/04/13 13:01	1
Chlorodibromomethane	ND		0.50		ug/L			04/04/13 13:01	1
Chloroethane	ND		2.0		ug/L			04/04/13 13:01	1
Chloroform	ND		1.0		ug/L			04/04/13 13:01	1
Chloromethane	ND		2.0		ug/L			04/04/13 13:01	1
cis-1,2-Dichloroethene	**4.8**		1.0		ug/L			04/04/13 13:01	1
cis-1,3-Dichloropropene	ND		0.40		ug/L			04/04/13 13:01	1
Dichlorobromomethane	ND		0.50		ug/L			04/04/13 13:01	1
Dichlorodifluoromethane	ND		1.0		ug/L			04/04/13 13:01	1
Ethyl ether	ND		1.0		ug/L			04/04/13 13:01	1
Ethylbenzene	ND		1.0		ug/L			04/04/13 13:01	1
Ethylene Dibromide	ND		1.0		ug/L			04/04/13 13:01	1
Hexachlorobutadiene	ND		0.40		ug/L			04/04/13 13:01	1
Isopropyl ether	ND		10		ug/L			04/04/13 13:01	1
Isopropylbenzene	ND		1.0		ug/L			04/04/13 13:01	1
Methyl tert-butyl ether	ND		1.0		ug/L			04/04/13 13:01	1
Methylene Chloride	ND		1.0		ug/L			04/04/13 13:01	1
m-Xylene & p-Xylene	ND		2.0		ug/L			04/04/13 13:01	1
Naphthalene	ND		5.0		ug/L			04/04/13 13:01	1
n-Butylbenzene	ND		1.0		ug/L			04/04/13 13:01	1
N-Propylbenzene	ND		1.0		ug/L			04/04/13 13:01	1
o-Xylene	ND		1.0		ug/L			04/04/13 13:01	1
sec-Butylbenzene	ND		1.0		ug/L			04/04/13 13:01	1
Styrene	ND		1.0		ug/L			04/04/13 13:01	1
Tert-amyl methyl ether	ND		5.0		ug/L			04/04/13 13:01	1
Tert-butyl ethyl ether	ND		5.0		ug/L			04/04/13 13:01	1
tert-Butylbenzene	ND		1.0		ug/L			04/04/13 13:01	1
Tetrachloroethene	ND		1.0		ug/L			04/04/13 13:01	1
Tetrahydrofuran	ND		10		ug/L			04/04/13 13:01	1
Toluene	ND		1.0		ug/L			04/04/13 13:01	1

Client Sample ID: DEP-21-2013 0401-01

Lab Sample ID: 480-35387-2

Date Collected: 04/01/13 12:00

Matrix: Water

Date Received: 04/02/13 01:40

Method: 8260C - Volatile Organic Compounds (GC/MS) (Continued)

Analyte	Result	Qualifier	RL	MDL	Unit	D	Prepared	Analyzed	Dil Fac
trans-1,2-Dichloroethene	ND		1.0		ug/L			04/04/13 13:01	1
trans-1,3-Dichloropropene	ND		0.40		ug/L			04/04/13 13:01	1
Trichloroethene	**1.2**		1.0		ug/L			04/04/13 13:01	1
Trichlorofluoromethane	ND		1.0		ug/L			04/04/13 13:01	1
Vinyl chloride	ND		1.0		ug/L			04/04/13 13:01	1
Dibromomethane	ND		1.0		ug/L			04/04/13 13:01	1

Surrogate	*%Recovery*	*Qualifier*	*Limits*	*Prepared*	*Analyzed*	*Dil Fac*
Toluene-d8 (Surr)	*93*		*70 - 130*		*04/04/13 13:01*	*1*
1,2-Dichloroethane-d4 (Surr)	*88*		*70 - 130*		*04/04/13 13:01*	*1*
4-Bromofluorobenzene (Surr)	*103*		*70 - 130*		*04/04/13 13:01*	*1*

Client Sample ID: MW-261S-2013 0401

Lab Sample ID: 480-35387-3

Date Collected: 04/01/13 08:35

Matrix: Water

Date Received: 04/02/13 01:40

Method: 8260B SIM - Volatile Organic Compounds (GC/MS)

Analyte	Result	Qualifier	RL	MDL	Unit	D	Prepared	Analyzed	Dil Fac
1,4-Dioxane	ND		6.4		ug/L			04/03/13 16:20	4

Surrogate	*%Recovery*	*Qualifier*	*Limits*	*Prepared*	*Analyzed*	*Dil Fac*
Dibromofluoromethane (Surr)	*100*		*50 - 150*		*04/03/13 16:20*	*4*
TBA-d9 (Surr)	*202*	*X*	*50 - 150*		*04/03/13 16:20*	*4*

Method: 8260C - Volatile Organic Compounds (GC/MS)

Analyte	Result	Qualifier	RL	MDL	Unit	D	Prepared	Analyzed	Dil Fac
1,1,1,2-Tetrachloroethane	ND		200		ug/L			04/04/13 13:25	200
1,1,1-Trichloroethane	ND		200		ug/L			04/04/13 13:25	200
1,1,2,2-Tetrachloroethane	ND		100		ug/L			04/04/13 13:25	200
1,1,2-Trichloroethane	ND		200		ug/L			04/04/13 13:25	200
1,1-Dichloroethane	ND		200		ug/L			04/04/13 13:25	200
1,1-Dichloroethene	ND		200		ug/L			04/04/13 13:25	200
1,1-Dichloropropene	ND		200		ug/L			04/04/13 13:25	200
1,2,3-Trichlorobenzene	ND		200		ug/L			04/04/13 13:25	200
1,2,3-Trichloropropane	ND		200		ug/L			04/04/13 13:25	200
1,2,4-Trichlorobenzene	ND		200		ug/L			04/04/13 13:25	200
1,2,4-Trimethylbenzene	ND		200		ug/L			04/04/13 13:25	200
1,2-Dibromo-3-Chloropropane	ND		1000		ug/L			04/04/13 13:25	200
1,2-Dichlorobenzene	ND		200		ug/L			04/04/13 13:25	200
1,2-Dichloroethane	ND		200		ug/L			04/04/13 13:25	200
1,2-Dichloropropane	ND		200		ug/L			04/04/13 13:25	200
1,3,5-Trimethylbenzene	ND		200		ug/L			04/04/13 13:25	200
1,3-Dichlorobenzene	ND		200		ug/L			04/04/13 13:25	200
1,3-Dichloropropane	ND		200		ug/L			04/04/13 13:25	200
1,4-Dichlorobenzene	ND		200		ug/L			04/04/13 13:25	200
1,4-Dioxane	ND		10000		ug/L			04/04/13 13:25	200
2,2-Dichloropropane	ND		200		ug/L			04/04/13 13:25	200
2-Butanone (MEK)	ND		2000		ug/L			04/04/13 13:25	200
2-Chlorotoluene	ND		200		ug/L			04/04/13 13:25	200
2-Hexanone	ND		2000		ug/L			04/04/13 13:25	200

Client Sample ID: MW-261S-2013 0401

Lab Sample ID: 480-35387-3

Date Collected: 04/01/13 08:35

Matrix: Water

Date Received: 04/02/13 01:40

Method: 8260C - Volatile Organic Compounds (GC/MS) (Continued)

Analyte	Result	Qualifier	RL	MDL	Unit	D	Prepared	Analyzed	Dil Fac
4-Chlorotoluene	ND		200		ug/L			04/04/13 13:25	200
4-Isopropyltoluene	ND		200		ug/L			04/04/13 13:25	200
4-Methyl-2-pentanone (MIBK)	ND		2000		ug/L			04/04/13 13:25	200
Acetone	**52000**		10000		ug/L			04/04/13 13:25	200
Benzene	ND		200		ug/L			04/04/13 13:25	200
Bromobenzene	ND		200		ug/L			04/04/13 13:25	200
Bromoform	ND		200		ug/L			04/04/13 13:25	200
Bromomethane	ND		400		ug/L			04/04/13 13:25	200
Carbon disulfide	ND		2000		ug/L			04/04/13 13:25	200
Carbon tetrachloride	ND		200		ug/L			04/04/13 13:25	200
Chlorobenzene	ND		200		ug/L			04/04/13 13:25	200
Chlorobromomethane	ND		200		ug/L			04/04/13 13:25	200
Chlorodibromomethane	ND		100		ug/L			04/04/13 13:25	200
Chloroethane	ND		400		ug/L			04/04/13 13:25	200
Chloroform	ND		200		ug/L			04/04/13 13:25	200
Chloromethane	ND		400		ug/L			04/04/13 13:25	200
cis-1,2-Dichloroethene	ND		200		ug/L			04/04/13 13:25	200
cis-1,3-Dichloropropene	ND		80		ug/L			04/04/13 13:25	200
Dichlorobromomethane	ND		100		ug/L			04/04/13 13:25	200
Dichlorodifluoromethane	ND		200		ug/L			04/04/13 13:25	200
Ethyl ether	ND		200		ug/L			04/04/13 13:25	200
Ethylbenzene	ND		200		ug/L			04/04/13 13:25	200
Ethylene Dibromide	ND		200		ug/L			04/04/13 13:25	200
Hexachlorobutadiene	ND		80		ug/L			04/04/13 13:25	200
Isopropyl ether	ND		2000		ug/L			04/04/13 13:25	200
Isopropylbenzene	ND		200		ug/L			04/04/13 13:25	200
Methyl tert-butyl ether	ND		200		ug/L			04/04/13 13:25	200
Methylene Chloride	ND		200		ug/L			04/04/13 13:25	200
m-Xylene & p-Xylene	ND		400		ug/L			04/04/13 13:25	200
Naphthalene	ND		1000		ug/L			04/04/13 13:25	200
n-Butylbenzene	ND		200		ug/L			04/04/13 13:25	200
N-Propylbenzene	ND		200		ug/L			04/04/13 13:25	200
o-Xylene	ND		200		ug/L			04/04/13 13:25	200
sec-Butylbenzene	ND		200		ug/L			04/04/13 13:25	200
Styrene	ND		200		ug/L			04/04/13 13:25	200
Tert-amyl methyl ether	ND		1000		ug/L			04/04/13 13:25	200
Tert-butyl ethyl ether	ND		1000		ug/L			04/04/13 13:25	200
tert-Butylbenzene	ND		200		ug/L			04/04/13 13:25	200
Tetrachloroethene	ND		200		ug/L			04/04/13 13:25	200
Tetrahydrofuran	ND		2000		ug/L			04/04/13 13:25	200
Toluene	ND		200		ug/L			04/04/13 13:25	200
trans-1,2-Dichloroethene	ND		200		ug/L			04/04/13 13:25	200
trans-1,3-Dichloropropene	ND		80		ug/L			04/04/13 13:25	200
Trichloroethene	ND		200		ug/L			04/04/13 13:25	200
Trichlorofluoromethane	ND		200		ug/L			04/04/13 13:25	200
Vinyl chloride	ND		200		ug/L			04/04/13 13:25	200
Dibromomethane	ND		200		ug/L			04/04/13 13:25	200

Surrogate	*%Recovery*	*Qualifier*	*Limits*	*Prepared*	*Analyzed*	*Dil Fac*
Toluene-d8 (Surr)	*95*		*70 - 130*		*04/04/13 13:25*	*200*

Client Sample ID: MW-261S-2013 0401

Lab Sample ID: 480-35387-3

Date Collected: 04/01/13 08:35

Matrix: Water

Date Received: 04/02/13 01:40

Method: 8260C - Volatile Organic Compounds (GC/MS) (Continued)

Surrogate	*%Recovery*	*Qualifier*	*Limits*	*Prepared*	*Analyzed*	*Dil Fac*
1,2-Dichloroethane-d4 (Surr)	*88*		*70 - 130*		*04/04/13 13:25*	*200*
4-Bromofluorobenzene (Surr)	*103*		*70 - 130*		*04/04/13 13:25*	*200*

Client Sample ID: MW-263M-2013 0401

Lab Sample ID: 480-35387-4

Date Collected: 04/01/13 10:55

Matrix: Water

Date Received: 04/02/13 01:40

Method: 8260C - Volatile Organic Compounds (GC/MS)

Analyte	Result	Qualifier	RL	MDL	Unit	D	Prepared	Analyzed	Dil Fac
1,1,1,2-Tetrachloroethane	ND		1.0		ug/L			04/04/13 13:48	1
1,1,1-Trichloroethane	ND		1.0		ug/L			04/04/13 13:48	1
1,1,2,2-Tetrachloroethane	ND		0.50		ug/L			04/04/13 13:48	1
1,1,2-Trichloroethane	ND		1.0		ug/L			04/04/13 13:48	1
1,1-Dichloroethane	ND		1.0		ug/L			04/04/13 13:48	1
1,1-Dichloroethene	ND		1.0		ug/L			04/04/13 13:48	1
1,1-Dichloropropene	ND		1.0		ug/L			04/04/13 13:48	1
1,2,3-Trichlorobenzene	ND		1.0		ug/L			04/04/13 13:48	1
1,2,3-Trichloropropane	ND		1.0		ug/L			04/04/13 13:48	1
1,2,4-Trichlorobenzene	ND		1.0		ug/L			04/04/13 13:48	1
1,2,4-Trimethylbenzene	ND		1.0		ug/L			04/04/13 13:48	1
1,2-Dibromo-3-Chloropropane	ND		5.0		ug/L			04/04/13 13:48	1
1,2-Dichlorobenzene	ND		1.0		ug/L			04/04/13 13:48	1
1,2-Dichloroethane	ND		1.0		ug/L			04/04/13 13:48	1
1,2-Dichloropropane	ND		1.0		ug/L			04/04/13 13:48	1
1,3,5-Trimethylbenzene	ND		1.0		ug/L			04/04/13 13:48	1
1,3-Dichlorobenzene	ND		1.0		ug/L			04/04/13 13:48	1
1,3-Dichloropropane	ND		1.0		ug/L			04/04/13 13:48	1
1,4-Dichlorobenzene	ND		1.0		ug/L			04/04/13 13:48	1
1,4-Dioxane	ND		50		ug/L			04/04/13 13:48	1
2,2-Dichloropropane	ND		1.0		ug/L			04/04/13 13:48	1
2-Butanone (MEK)	ND		10		ug/L			04/04/13 13:48	1
2-Chlorotoluene	ND		1.0		ug/L			04/04/13 13:48	1
2-Hexanone	ND		10		ug/L			04/04/13 13:48	1
4-Chlorotoluene	ND		1.0		ug/L			04/04/13 13:48	1
4-Isopropyltoluene	ND		1.0		ug/L			04/04/13 13:48	1
4-Methyl-2-pentanone (MIBK)	ND		10		ug/L			04/04/13 13:48	1
Acetone	ND		50		ug/L			04/04/13 13:48	1
Benzene	ND		1.0		ug/L			04/04/13 13:48	1
Bromobenzene	ND		1.0		ug/L			04/04/13 13:48	1
Bromoform	ND		1.0		ug/L			04/04/13 13:48	1
Bromomethane	ND		2.0		ug/L			04/04/13 13:48	1
Carbon disulfide	ND		10		ug/L			04/04/13 13:48	1
Carbon tetrachloride	ND		1.0		ug/L			04/04/13 13:48	1
Chlorobenzene	ND		1.0		ug/L			04/04/13 13:48	1
Chlorobromomethane	ND		1.0		ug/L			04/04/13 13:48	1
Chlorodibromomethane	ND		0.50		ug/L			04/04/13 13:48	1
Chloroethane	ND		2.0		ug/L			04/04/13 13:48	1
Chloroform	ND		1.0		ug/L			04/04/13 13:48	1
Chloromethane	ND		2.0		ug/L			04/04/13 13:48	1

Client Sample ID: MW-263M-2013 0401

Lab Sample ID: 480-35387-4

Date Collected: 04/01/13 10:55

Matrix: Water

Date Received: 04/02/13 01:40

Method: 8260C - Volatile Organic Compounds (GC/MS) (Continued)

Analyte	Result	Qualifier	RL	MDL	Unit	D	Prepared	Analyzed	Dil Fac
cis-1,2-Dichloroethene	ND		1.0		ug/L			04/04/13 13:48	1
cis-1,3-Dichloropropene	ND		0.40		ug/L			04/04/13 13:48	1
Dichlorobromomethane	ND		0.50		ug/L			04/04/13 13:48	1
Dichlorodifluoromethane	ND		1.0		ug/L			04/04/13 13:48	1
Ethyl ether	ND		1.0		ug/L			04/04/13 13:48	1
Ethylbenzene	ND		1.0		ug/L			04/04/13 13:48	1
Ethylene Dibromide	ND		1.0		ug/L			04/04/13 13:48	1
Hexachlorobutadiene	ND		0.40		ug/L			04/04/13 13:48	1
Isopropyl ether	ND		10		ug/L			04/04/13 13:48	1
Isopropylbenzene	ND		1.0		ug/L			04/04/13 13:48	1
Methyl tert-butyl ether	ND		1.0		ug/L			04/04/13 13:48	1
Methylene Chloride	ND		1.0		ug/L			04/04/13 13:48	1
m-Xylene & p-Xylene	ND		2.0		ug/L			04/04/13 13:48	1
Naphthalene	ND		5.0		ug/L			04/04/13 13:48	1
n-Butylbenzene	ND		1.0		ug/L			04/04/13 13:48	1
N-Propylbenzene	ND		1.0		ug/L			04/04/13 13:48	1
o-Xylene	ND		1.0		ug/L			04/04/13 13:48	1
sec-Butylbenzene	ND		1.0		ug/L			04/04/13 13:48	1
Styrene	ND		1.0		ug/L			04/04/13 13:48	1
Tert-amyl methyl ether	ND		5.0		ug/L			04/04/13 13:48	1
Tert-butyl ethyl ether	ND		5.0		ug/L			04/04/13 13:48	1
tert-Butylbenzene	ND		1.0		ug/L			04/04/13 13:48	1
Tetrachloroethene	ND		1.0		ug/L			04/04/13 13:48	1
Tetrahydrofuran	ND		10		ug/L			04/04/13 13:48	1
Toluene	ND		1.0		ug/L			04/04/13 13:48	1
trans-1,2-Dichloroethene	ND		1.0		ug/L			04/04/13 13:48	1
trans-1,3-Dichloropropene	ND		0.40		ug/L			04/04/13 13:48	1
Trichloroethene	ND		1.0		ug/L			04/04/13 13:48	1
Trichlorofluoromethane	ND		1.0		ug/L			04/04/13 13:48	1
Vinyl chloride	ND		1.0		ug/L			04/04/13 13:48	1
Dibromomethane	ND		1.0		ug/L			04/04/13 13:48	1

Surrogate	*%Recovery*	*Qualifier*	*Limits*	*Prepared*	*Analyzed*	*Dil Fac*
Toluene-d8 (Surr)	*97*		*70 - 130*		*04/04/13 13:48*	*1*
1,2-Dichloroethane-d4 (Surr)	*89*		*70 - 130*		*04/04/13 13:48*	*1*
4-Bromofluorobenzene (Surr)	*104*		*70 - 130*		*04/04/13 13:48*	*1*

Client Sample ID: MW-264M-2013 0401

Lab Sample ID: 480-35387-5

Date Collected: 04/01/13 10:20

Matrix: Water

Date Received: 04/02/13 01:40

Method: 8260C - Volatile Organic Compounds (GC/MS)

Analyte	Result	Qualifier	RL	MDL	Unit	D	Prepared	Analyzed	Dil Fac
1,1,1,2-Tetrachloroethane	ND		1.0		ug/L			04/04/13 14:12	1
1,1,1-Trichloroethane	ND		1.0		ug/L			04/04/13 14:12	1
1,1,2,2-Tetrachloroethane	ND		0.50		ug/L			04/04/13 14:12	1
1,1,2-Trichloroethane	ND		1.0		ug/L			04/04/13 14:12	1
1,1-Dichloroethane	ND		1.0		ug/L			04/04/13 14:12	1
1,1-Dichloroethene	ND		1.0		ug/L			04/04/13 14:12	1
1,1-Dichloropropene	ND		1.0		ug/L			04/04/13 14:12	1

Client Sample ID: MW-264M-2013 0401
Date Collected: 04/01/13 10:20
Date Received: 04/02/13 01:40

Lab Sample ID: 480-35387-5
Matrix: Water

Method: 8260C - Volatile Organic Compounds (GC/MS) (Continued)

Analyte	Result	Qualifier	RL	MDL	Unit	D	Prepared	Analyzed	Dil Fac
1,2,3-Trichlorobenzene	ND		1.0		ug/L			04/04/13 14:12	1
1,2,3-Trichloropropane	ND		1.0		ug/L			04/04/13 14:12	1
1,2,4-Trichlorobenzene	ND		1.0		ug/L			04/04/13 14:12	1
1,2,4-Trimethylbenzene	ND		1.0		ug/L			04/04/13 14:12	1
1,2-Dibromo-3-Chloropropane	ND		5.0		ug/L			04/04/13 14:12	1
1,2-Dichlorobenzene	ND		1.0		ug/L			04/04/13 14:12	1
1,2-Dichloroethane	ND		1.0		ug/L			04/04/13 14:12	1
1,2-Dichloropropane	ND		1.0		ug/L			04/04/13 14:12	1
1,3,5-Trimethylbenzene	ND		1.0		ug/L			04/04/13 14:12	1
1,3-Dichlorobenzene	ND		1.0		ug/L			04/04/13 14:12	1
1,3-Dichloropropane	ND		1.0		ug/L			04/04/13 14:12	1
1,4-Dichlorobenzene	ND		1.0		ug/L			04/04/13 14:12	1
1,4-Dioxane	ND		50		ug/L			04/04/13 14:12	1
2,2-Dichloropropane	ND		1.0		ug/L			04/04/13 14:12	1
2-Butanone (MEK)	ND		10		ug/L			04/04/13 14:12	1
2-Chlorotoluene	ND		1.0		ug/L			04/04/13 14:12	1
2-Hexanone	ND		10		ug/L			04/04/13 14:12	1
4-Chlorotoluene	ND		1.0		ug/L			04/04/13 14:12	1
4-Isopropyltoluene	ND		1.0		ug/L			04/04/13 14:12	1
4-Methyl-2-pentanone (MIBK)	ND		10		ug/L			04/04/13 14:12	1
Acetone	ND		50		ug/L			04/04/13 14:12	1
Benzene	ND		1.0		ug/L			04/04/13 14:12	1
Bromobenzene	ND		1.0		ug/L			04/04/13 14:12	1
Bromoform	ND		1.0		ug/L			04/04/13 14:12	1
Bromomethane	ND		2.0		ug/L			04/04/13 14:12	1
Carbon disulfide	ND		10		ug/L			04/04/13 14:12	1
Carbon tetrachloride	ND		1.0		ug/L			04/04/13 14:12	1
Chlorobenzene	ND		1.0		ug/L			04/04/13 14:12	1
Chlorobromomethane	ND		1.0		ug/L			04/04/13 14:12	1
Chlorodibromomethane	ND		0.50		ug/L			04/04/13 14:12	1
Chloroethane	ND		2.0		ug/L			04/04/13 14:12	1
Chloroform	ND		1.0		ug/L			04/04/13 14:12	1
Chloromethane	ND		2.0		ug/L			04/04/13 14:12	1
cis-1,2-Dichloroethene	**6.2**		1.0		ug/L			04/04/13 14:12	1
cis-1,3-Dichloropropene	ND		0.40		ug/L			04/04/13 14:12	1
Dichlorobromomethane	ND		0.50		ug/L			04/04/13 14:12	1
Dichlorodifluoromethane	ND		1.0		ug/L			04/04/13 14:12	1
Ethyl ether	ND		1.0		ug/L			04/04/13 14:12	1
Ethylbenzene	ND		1.0		ug/L			04/04/13 14:12	1
Ethylene Dibromide	ND		1.0		ug/L			04/04/13 14:12	1
Hexachlorobutadiene	ND		0.40		ug/L			04/04/13 14:12	1
Isopropyl ether	ND		10		ug/L			04/04/13 14:12	1
Isopropylbenzene	ND		1.0		ug/L			04/04/13 14:12	1
Methyl tert-butyl ether	ND		1.0		ug/L			04/04/13 14:12	1
Methylene Chloride	ND		1.0		ug/L			04/04/13 14:12	1
m-Xylene & p-Xylene	ND		2.0		ug/L			04/04/13 14:12	1
Naphthalene	ND		5.0		ug/L			04/04/13 14:12	1
n-Butylbenzene	ND		1.0		ug/L			04/04/13 14:12	1
N-Propylbenzene	ND		1.0		ug/L			04/04/13 14:12	1

Client Sample ID: MW-264M-2013 0401

Lab Sample ID: 480-35387-5

Date Collected: 04/01/13 10:20

Matrix: Water

Date Received: 04/02/13 01:40

Method: 8260C - Volatile Organic Compounds (GC/MS) (Continued)

Analyte	Result	Qualifier	RL	MDL	Unit	D	Prepared	Analyzed	Dil Fac
o-Xylene	ND		1.0		ug/L			04/04/13 14:12	1
sec-Butylbenzene	ND		1.0		ug/L			04/04/13 14:12	1
Styrene	ND		1.0		ug/L			04/04/13 14:12	1
Tert-amyl methyl ether	ND		5.0		ug/L			04/04/13 14:12	1
Tert-butyl ethyl ether	ND		5.0		ug/L			04/04/13 14:12	1
tert-Butylbenzene	ND		1.0		ug/L			04/04/13 14:12	1
Tetrachloroethene	**1.5**		1.0		ug/L			04/04/13 14:12	1
Tetrahydrofuran	ND		10		ug/L			04/04/13 14:12	1
Toluene	ND		1.0		ug/L			04/04/13 14:12	1
trans-1,2-Dichloroethene	ND		1.0		ug/L			04/04/13 14:12	1
trans-1,3-Dichloropropene	ND		0.40		ug/L			04/04/13 14:12	1
Trichloroethene	**8.6**		1.0		ug/L			04/04/13 14:12	1
Trichlorofluoromethane	ND		1.0		ug/L			04/04/13 14:12	1
Vinyl chloride	ND		1.0		ug/L			04/04/13 14:12	1
Dibromomethane	ND		1.0		ug/L			04/04/13 14:12	1

Surrogate	*%Recovery*	*Qualifier*	*Limits*	*Prepared*	*Analyzed*	*Dil Fac*
Toluene-d8 (Surr)	*94*		*70 - 130*		*04/04/13 14:12*	*1*
1,2-Dichloroethane-d4 (Surr)	*88*		*70 - 130*		*04/04/13 14:12*	*1*
4-Bromofluorobenzene (Surr)	*104*		*70 - 130*		*04/04/13 14:12*	*1*

Client Sample ID: MW-265S-2013 0401

Lab Sample ID: 480-35387-6

Date Collected: 04/01/13 10:20

Matrix: Water

Date Received: 04/02/13 01:40

Method: 8260C - Volatile Organic Compounds (GC/MS)

Analyte	Result	Qualifier	RL	MDL	Unit	D	Prepared	Analyzed	Dil Fac
1,1,1,2-Tetrachloroethane	ND		1.0		ug/L			04/05/13 00:33	1
1,1,1-Trichloroethane	ND		1.0		ug/L			04/05/13 00:33	1
1,1,2,2-Tetrachloroethane	ND		0.50		ug/L			04/05/13 00:33	1
1,1,2-Trichloroethane	ND		1.0		ug/L			04/05/13 00:33	1
1,1-Dichloroethane	ND		1.0		ug/L			04/05/13 00:33	1
1,1-Dichloroethene	ND		1.0		ug/L			04/05/13 00:33	1
1,1-Dichloropropene	ND		1.0		ug/L			04/05/13 00:33	1
1,2,3-Trichlorobenzene	ND		1.0		ug/L			04/05/13 00:33	1
1,2,3-Trichloropropane	ND		1.0		ug/L			04/05/13 00:33	1
1,2,4-Trichlorobenzene	ND		1.0		ug/L			04/05/13 00:33	1
1,2,4-Trimethylbenzene	ND		1.0		ug/L			04/05/13 00:33	1
1,2-Dibromo-3-Chloropropane	ND		5.0		ug/L			04/05/13 00:33	1
1,2-Dichlorobenzene	ND		1.0		ug/L			04/05/13 00:33	1
1,2-Dichloroethane	ND		1.0		ug/L			04/05/13 00:33	1
1,2-Dichloropropane	ND		1.0		ug/L			04/05/13 00:33	1
1,3,5-Trimethylbenzene	ND		1.0		ug/L			04/05/13 00:33	1
1,3-Dichlorobenzene	ND		1.0		ug/L			04/05/13 00:33	1
1,3-Dichloropropane	ND		1.0		ug/L			04/05/13 00:33	1
1,4-Dichlorobenzene	ND		1.0		ug/L			04/05/13 00:33	1
1,4-Dioxane	ND		50		ug/L			04/05/13 00:33	1
2,2-Dichloropropane	ND		1.0		ug/L			04/05/13 00:33	1
2-Butanone (MEK)	ND		10		ug/L			04/05/13 00:33	1
2-Chlorotoluene	ND		1.0		ug/L			04/05/13 00:33	1

Client Sample ID: MW-265S-2013 0401
Date Collected: 04/01/13 10:20
Date Received: 04/02/13 01:40

Lab Sample ID: 480-35387-6
Matrix: Water

Method: 8260C - Volatile Organic Compounds (GC/MS) (Continued)

Analyte	Result	Qualifier	RL	MDL	Unit	D	Prepared	Analyzed	Dil Fac
2-Hexanone	ND		10		ug/L			04/05/13 00:33	1
4-Chlorotoluene	ND		1.0		ug/L			04/05/13 00:33	1
4-Isopropyltoluene	ND		1.0		ug/L			04/05/13 00:33	1
4-Methyl-2-pentanone (MIBK)	ND		10		ug/L			04/05/13 00:33	1
Acetone	ND		50		ug/L			04/05/13 00:33	1
Benzene	ND		1.0		ug/L			04/05/13 00:33	1
Bromobenzene	ND		1.0		ug/L			04/05/13 00:33	1
Bromoform	ND		1.0		ug/L			04/05/13 00:33	1
Bromomethane	ND		2.0		ug/L			04/05/13 00:33	1
Carbon disulfide	ND		10		ug/L			04/05/13 00:33	1
Carbon tetrachloride	ND		1.0		ug/L			04/05/13 00:33	1
Chlorobenzene	ND		1.0		ug/L			04/05/13 00:33	1
Chlorobromomethane	ND		1.0		ug/L			04/05/13 00:33	1
Chlorodibromomethane	ND		0.50		ug/L			04/05/13 00:33	1
Chloroethane	ND	*	2.0		ug/L			04/05/13 00:33	1
Chloroform	ND		1.0		ug/L			04/05/13 00:33	1
Chloromethane	ND		2.0		ug/L			04/05/13 00:33	1
cis-1,2-Dichloroethene	ND		1.0		ug/L			04/05/13 00:33	1
cis-1,3-Dichloropropene	ND		0.40		ug/L			04/05/13 00:33	1
Dichlorobromomethane	ND		0.50		ug/L			04/05/13 00:33	1
Dichlorodifluoromethane	ND		1.0		ug/L			04/05/13 00:33	1
Ethyl ether	ND		1.0		ug/L			04/05/13 00:33	1
Ethylbenzene	ND		1.0		ug/L			04/05/13 00:33	1
Ethylene Dibromide	ND		1.0		ug/L			04/05/13 00:33	1
Hexachlorobutadiene	ND		0.40		ug/L			04/05/13 00:33	1
Isopropyl ether	ND		10		ug/L			04/05/13 00:33	1
Isopropylbenzene	ND		1.0		ug/L			04/05/13 00:33	1
Methyl tert-butyl ether	ND		1.0		ug/L			04/05/13 00:33	1
Methylene Chloride	ND		1.0		ug/L			04/05/13 00:33	1
m-Xylene & p-Xylene	ND		2.0		ug/L			04/05/13 00:33	1
Naphthalene	ND		5.0		ug/L			04/05/13 00:33	1
n-Butylbenzene	ND		1.0		ug/L			04/05/13 00:33	1
N-Propylbenzene	ND		1.0		ug/L			04/05/13 00:33	1
o-Xylene	ND		1.0		ug/L			04/05/13 00:33	1
sec-Butylbenzene	ND		1.0		ug/L			04/05/13 00:33	1
Styrene	ND		1.0		ug/L			04/05/13 00:33	1
Tert-amyl methyl ether	ND		5.0		ug/L			04/05/13 00:33	1
Tert-butyl ethyl ether	ND		5.0		ug/L			04/05/13 00:33	1
tert-Butylbenzene	ND		1.0		ug/L			04/05/13 00:33	1
Tetrachloroethene	ND		1.0		ug/L			04/05/13 00:33	1
Tetrahydrofuran	ND		10		ug/L			04/05/13 00:33	1
Toluene	ND		1.0		ug/L			04/05/13 00:33	1
trans-1,2-Dichloroethene	ND		1.0		ug/L			04/05/13 00:33	1
trans-1,3-Dichloropropene	ND		0.40		ug/L			04/05/13 00:33	1
Trichloroethene	ND		1.0		ug/L			04/05/13 00:33	1
Trichlorofluoromethane	ND		1.0		ug/L			04/05/13 00:33	1
Vinyl chloride	ND		1.0		ug/L			04/05/13 00:33	1
Dibromomethane	ND		1.0		ug/L			04/05/13 00:33	1

Client Sample ID: MW-265S-2013 0401

Lab Sample ID: 480-35387-6

Date Collected: 04/01/13 10:20

Matrix: Water

Date Received: 04/02/13 01:40

Surrogate	*%Recovery*	*Qualifier*	*Limits*	*Prepared*	*Analyzed*	*Dil Fac*
Toluene-d8 (Surr)	*97*		*70 - 130*		*04/05/13 00:33*	*1*
1,2-Dichloroethane-d4 (Surr)	*87*		*70 - 130*		*04/05/13 00:33*	*1*
4-Bromofluorobenzene (Surr)	*106*		*70 - 130*		*04/05/13 00:33*	*1*

Client Sample ID: MW-265M-2013 0329-01

Lab Sample ID: 480-35387-7

Date Collected: 03/29/13 11:30

Matrix: Water

Date Received: 04/02/13 01:40

Method: 8260B SIM - Volatile Organic Compounds (GC/MS)

Analyte	Result	Qualifier	RL	MDL	Unit	D	Prepared	Analyzed	Dil Fac
1,4-Dioxane	ND		6.4		ug/L			04/03/13 16:44	4

Surrogate	*%Recovery*	*Qualifier*	*Limits*	*Prepared*	*Analyzed*	*Dil Fac*
Dibromofluoromethane (Surr)	*106*		*50 - 150*		*04/03/13 16:44*	*4*
TBA-d9 (Surr)	*156*	*X*	*50 - 150*		*04/03/13 16:44*	*4*

Method: 8260C - Volatile Organic Compounds (GC/MS)

Analyte	Result	Qualifier	RL	MDL	Unit	D	Prepared	Analyzed	Dil Fac
1,1,1,2-Tetrachloroethane	ND		10		ug/L			04/04/13 15:00	10
1,1,1-Trichloroethane	ND		10		ug/L			04/04/13 15:00	10
1,1,2,2-Tetrachloroethane	ND		5.0		ug/L			04/04/13 15:00	10
1,1,2-Trichloroethane	ND		10		ug/L			04/04/13 15:00	10
1,1-Dichloroethane	ND		10		ug/L			04/04/13 15:00	10
1,1-Dichloroethene	ND		10		ug/L			04/04/13 15:00	10
1,1-Dichloropropene	ND		10		ug/L			04/04/13 15:00	10
1,2,3-Trichlorobenzene	ND		10		ug/L			04/04/13 15:00	10
1,2,3-Trichloropropane	ND		10		ug/L			04/04/13 15:00	10
1,2,4-Trichlorobenzene	ND		10		ug/L			04/04/13 15:00	10
1,2,4-Trimethylbenzene	ND		10		ug/L			04/04/13 15:00	10
1,2-Dibromo-3-Chloropropane	ND		50		ug/L			04/04/13 15:00	10
1,2-Dichlorobenzene	ND		10		ug/L			04/04/13 15:00	10
1,2-Dichloroethane	ND		10		ug/L			04/04/13 15:00	10
1,2-Dichloropropane	ND		10		ug/L			04/04/13 15:00	10
1,3,5-Trimethylbenzene	ND		10		ug/L			04/04/13 15:00	10
1,3-Dichlorobenzene	ND		10		ug/L			04/04/13 15:00	10
1,3-Dichloropropane	ND		10		ug/L			04/04/13 15:00	10
1,4-Dichlorobenzene	ND		10		ug/L			04/04/13 15:00	10
1,4-Dioxane	ND		500		ug/L			04/04/13 15:00	10
2,2-Dichloropropane	ND		10		ug/L			04/04/13 15:00	10
2-Butanone (MEK)	**110**		100		ug/L			04/04/13 15:00	10
2-Chlorotoluene	ND		10		ug/L			04/04/13 15:00	10
2-Hexanone	ND		100		ug/L			04/04/13 15:00	10
4-Chlorotoluene	ND		10		ug/L			04/04/13 15:00	10
4-Isopropyltoluene	ND		10		ug/L			04/04/13 15:00	10
4-Methyl-2-pentanone (MIBK)	ND		100		ug/L			04/04/13 15:00	10
Benzene	ND		10		ug/L			04/04/13 15:00	10
Bromobenzene	ND		10		ug/L			04/04/13 15:00	10
Bromoform	ND		10		ug/L			04/04/13 15:00	10
Bromomethane	ND		20		ug/L			04/04/13 15:00	10
Carbon disulfide	ND		100		ug/L			04/04/13 15:00	10
Carbon tetrachloride	ND		10		ug/L			04/04/13 15:00	10

Client Sample ID: MW-265M-2013 0329-01

Lab Sample ID: 480-35387-7

Date Collected: 03/29/13 11:30

Matrix: Water

Date Received: 04/02/13 01:40

Method: 8260C - Volatile Organic Compounds (GC/MS) (Continued)

Analyte	Result	Qualifier	RL	MDL	Unit	D	Prepared	Analyzed	Dil Fac
Chlorobenzene	ND		10		ug/L			04/04/13 15:00	10
Chlorobromomethane	ND		10		ug/L			04/04/13 15:00	10
Chlorodibromomethane	ND		5.0		ug/L			04/04/13 15:00	10
Chloroethane	ND		20		ug/L			04/04/13 15:00	10
Chloroform	ND		10		ug/L			04/04/13 15:00	10
Chloromethane	ND		20		ug/L			04/04/13 15:00	10
cis-1,2-Dichloroethene	**32**		10		ug/L			04/04/13 15:00	10
cis-1,3-Dichloropropene	ND		4.0		ug/L			04/04/13 15:00	10
Dichlorobromomethane	ND		5.0		ug/L			04/04/13 15:00	10
Dichlorodifluoromethane	ND		10		ug/L			04/04/13 15:00	10
Ethyl ether	ND		10		ug/L			04/04/13 15:00	10
Ethylbenzene	ND		10		ug/L			04/04/13 15:00	10
Ethylene Dibromide	ND		10		ug/L			04/04/13 15:00	10
Hexachlorobutadiene	ND		4.0		ug/L			04/04/13 15:00	10
Isopropyl ether	ND		100		ug/L			04/04/13 15:00	10
Isopropylbenzene	ND		10		ug/L			04/04/13 15:00	10
Methyl tert-butyl ether	ND		10		ug/L			04/04/13 15:00	10
Methylene Chloride	ND		10		ug/L			04/04/13 15:00	10
m-Xylene & p-Xylene	ND		20		ug/L			04/04/13 15:00	10
Naphthalene	ND		50		ug/L			04/04/13 15:00	10
n-Butylbenzene	ND		10		ug/L			04/04/13 15:00	10
N-Propylbenzene	ND		10		ug/L			04/04/13 15:00	10
o-Xylene	ND		10		ug/L			04/04/13 15:00	10
sec-Butylbenzene	ND		10		ug/L			04/04/13 15:00	10
Styrene	ND		10		ug/L			04/04/13 15:00	10
Tert-amyl methyl ether	ND		50		ug/L			04/04/13 15:00	10
Tert-butyl ethyl ether	ND		50		ug/L			04/04/13 15:00	10
tert-Butylbenzene	ND		10		ug/L			04/04/13 15:00	10
Tetrachloroethene	ND		10		ug/L			04/04/13 15:00	10
Tetrahydrofuran	ND		100		ug/L			04/04/13 15:00	10
Toluene	ND		10		ug/L			04/04/13 15:00	10
trans-1,2-Dichloroethene	ND		10		ug/L			04/04/13 15:00	10
trans-1,3-Dichloropropene	ND		4.0		ug/L			04/04/13 15:00	10
Trichloroethene	ND		10		ug/L			04/04/13 15:00	10
Trichlorofluoromethane	ND		10		ug/L			04/04/13 15:00	10
Vinyl chloride	**26**		10		ug/L			04/04/13 15:00	10
Dibromomethane	ND		10		ug/L			04/04/13 15:00	10

Surrogate	*%Recovery*	*Qualifier*	*Limits*	*Prepared*	*Analyzed*	*Dil Fac*
Toluene-d8 (Surr)	*96*		*70 - 130*		*04/04/13 15:00*	*10*
1,2-Dichloroethane-d4 (Surr)	*89*		*70 - 130*		*04/04/13 15:00*	*10*
4-Bromofluorobenzene (Surr)	*102*		*70 - 130*		*04/04/13 15:00*	*10*

Method: 8260C - Volatile Organic Compounds (GC/MS) - DL

Analyte	Result	Qualifier	RL	MDL	Unit	D	Prepared	Analyzed	Dil Fac
Acetone	**7500**		1300		ug/L			04/05/13 00:57	25

Surrogate	*%Recovery*	*Qualifier*	*Limits*	*Prepared*	*Analyzed*	*Dil Fac*
Toluene-d8 (Surr)	*96*		*70 - 130*		*04/05/13 00:57*	*25*
1,2-Dichloroethane-d4 (Surr)	*86*		*70 - 130*		*04/05/13 00:57*	*25*

Client Sample ID: MW-265M-2013 0329-01

Lab Sample ID: 480-35387-7

Date Collected: 03/29/13 11:30

Matrix: Water

Date Received: 04/02/13 01:40

Method: 8260C - Volatile Organic Compounds (GC/MS) - DL (Continued)

Surrogate	%Recovery	Qualifier	Limits	Prepared	Analyzed	Dil Fac
4-Bromofluorobenzene (Surr)	102		70 - 130		04/05/13 00:57	25

Client Sample ID: MW-265D-2013 0401-01

Lab Sample ID: 480-35387-8

Date Collected: 04/01/13 11:35

Matrix: Water

Date Received: 04/02/13 01:40

Method: 8260C - Volatile Organic Compounds (GC/MS)

Analyte	Result	Qualifier	RL	MDL	Unit	D	Prepared	Analyzed	Dil Fac
1,1,1,2-Tetrachloroethane	ND		1.0		ug/L			04/04/13 15:23	1
1,1,1-Trichloroethane	ND		1.0		ug/L			04/04/13 15:23	1
1,1,2,2-Tetrachloroethane	ND		0.50		ug/L			04/04/13 15:23	1
1,1,2-Trichloroethane	ND		1.0		ug/L			04/04/13 15:23	1
1,1-Dichloroethane	ND		1.0		ug/L			04/04/13 15:23	1
1,1-Dichloroethene	ND		1.0		ug/L			04/04/13 15:23	1
1,1-Dichloropropene	ND		1.0		ug/L			04/04/13 15:23	1
1,2,3-Trichlorobenzene	ND		1.0		ug/L			04/04/13 15:23	1
1,2,3-Trichloropropane	ND		1.0		ug/L			04/04/13 15:23	1
1,2,4-Trichlorobenzene	ND		1.0		ug/L			04/04/13 15:23	1
1,2,4-Trimethylbenzene	ND		1.0		ug/L			04/04/13 15:23	1
1,2-Dibromo-3-Chloropropane	ND		5.0		ug/L			04/04/13 15:23	1
1,2-Dichlorobenzene	ND		1.0		ug/L			04/04/13 15:23	1
1,2-Dichloroethane	ND		1.0		ug/L			04/04/13 15:23	1
1,2-Dichloropropane	ND		1.0		ug/L			04/04/13 15:23	1
1,3,5-Trimethylbenzene	ND		1.0		ug/L			04/04/13 15:23	1
1,3-Dichlorobenzene	ND		1.0		ug/L			04/04/13 15:23	1
1,3-Dichloropropane	ND		1.0		ug/L			04/04/13 15:23	1
1,4-Dichlorobenzene	ND		1.0		ug/L			04/04/13 15:23	1
1,4-Dioxane	ND		50		ug/L			04/04/13 15:23	1
2,2-Dichloropropane	ND		1.0		ug/L			04/04/13 15:23	1
2-Butanone (MEK)	ND		10		ug/L			04/04/13 15:23	1
2-Chlorotoluene	ND		1.0		ug/L			04/04/13 15:23	1
2-Hexanone	ND		10		ug/L			04/04/13 15:23	1
4-Chlorotoluene	ND		1.0		ug/L			04/04/13 15:23	1
4-Isopropyltoluene	ND		1.0		ug/L			04/04/13 15:23	1
4-Methyl-2-pentanone (MIBK)	ND		10		ug/L			04/04/13 15:23	1
Acetone	ND		50		ug/L			04/04/13 15:23	1
Benzene	ND		1.0		ug/L			04/04/13 15:23	1
Bromobenzene	ND		1.0		ug/L			04/04/13 15:23	1
Bromoform	ND		1.0		ug/L			04/04/13 15:23	1
Bromomethane	ND		2.0		ug/L			04/04/13 15:23	1
Carbon disulfide	ND		10		ug/L			04/04/13 15:23	1
Carbon tetrachloride	ND		1.0		ug/L			04/04/13 15:23	1
Chlorobenzene	ND		1.0		ug/L			04/04/13 15:23	1
Chlorobromomethane	ND		1.0		ug/L			04/04/13 15:23	1
Chlorodibromomethane	ND		0.50		ug/L			04/04/13 15:23	1
Chloroethane	ND		2.0		ug/L			04/04/13 15:23	1
Chloroform	ND		1.0		ug/L			04/04/13 15:23	1
Chloromethane	ND		2.0		ug/L			04/04/13 15:23	1
cis-1,2-Dichloroethene	ND		1.0		ug/L			04/04/13 15:23	1

Client Sample ID: MW-265D-2013 0401-01

Lab Sample ID: 480-35387-8

Date Collected: 04/01/13 11:35

Matrix: Water

Date Received: 04/02/13 01:40

Method: 8260C - Volatile Organic Compounds (GC/MS) (Continued)

Analyte	Result	Qualifier	RL	MDL	Unit	D	Prepared	Analyzed	Dil Fac
cis-1,3-Dichloropropene	ND		0.40		ug/L			04/04/13 15:23	1
Dichlorobromomethane	ND		0.50		ug/L			04/04/13 15:23	1
Dichlorodifluoromethane	ND		1.0		ug/L			04/04/13 15:23	1
Ethyl ether	ND		1.0		ug/L			04/04/13 15:23	1
Ethylbenzene	ND		1.0		ug/L			04/04/13 15:23	1
Ethylene Dibromide	ND		1.0		ug/L			04/04/13 15:23	1
Hexachlorobutadiene	ND		0.40		ug/L			04/04/13 15:23	1
Isopropyl ether	ND		10		ug/L			04/04/13 15:23	1
Isopropylbenzene	ND		1.0		ug/L			04/04/13 15:23	1
Methyl tert-butyl ether	ND		1.0		ug/L			04/04/13 15:23	1
Methylene Chloride	ND		1.0		ug/L			04/04/13 15:23	1
m-Xylene & p-Xylene	ND		2.0		ug/L			04/04/13 15:23	1
Naphthalene	ND		5.0		ug/L			04/04/13 15:23	1
n-Butylbenzene	ND		1.0		ug/L			04/04/13 15:23	1
N-Propylbenzene	ND		1.0		ug/L			04/04/13 15:23	1
o-Xylene	ND		1.0		ug/L			04/04/13 15:23	1
sec-Butylbenzene	ND		1.0		ug/L			04/04/13 15:23	1
Styrene	ND		1.0		ug/L			04/04/13 15:23	1
Tert-amyl methyl ether	ND		5.0		ug/L			04/04/13 15:23	1
Tert-butyl ethyl ether	ND		5.0		ug/L			04/04/13 15:23	1
tert-Butylbenzene	ND		1.0		ug/L			04/04/13 15:23	1
Tetrachloroethene	ND		1.0		ug/L			04/04/13 15:23	1
Tetrahydrofuran	ND		10		ug/L			04/04/13 15:23	1
Toluene	ND		1.0		ug/L			04/04/13 15:23	1
trans-1,2-Dichloroethene	ND		1.0		ug/L			04/04/13 15:23	1
trans-1,3-Dichloropropene	ND		0.40		ug/L			04/04/13 15:23	1
Trichloroethene	ND		1.0		ug/L			04/04/13 15:23	1
Trichlorofluoromethane	ND		1.0		ug/L			04/04/13 15:23	1
Vinyl chloride	ND		1.0		ug/L			04/04/13 15:23	1
Dibromomethane	ND		1.0		ug/L			04/04/13 15:23	1

Surrogate	*%Recovery*	*Qualifier*	*Limits*	*Prepared*	*Analyzed*	*Dil Fac*
Toluene-d8 (Surr)	*96*		*70 - 130*		*04/04/13 15:23*	*1*
1,2-Dichloroethane-d4 (Surr)	*87*		*70 - 130*		*04/04/13 15:23*	*1*
4-Bromofluorobenzene (Surr)	*104*		*70 - 130*		*04/04/13 15:23*	*1*

Client Sample ID: MW-266Ma-2013 0329-01

Lab Sample ID: 480-35387-9

Date Collected: 03/29/13 14:05

Matrix: Water

Date Received: 04/02/13 01:40

Method: 8260B SIM - Volatile Organic Compounds (GC/MS)

Analyte	Result	Qualifier	RL	MDL	Unit	D	Prepared	Analyzed	Dil Fac
1,4-Dioxane	**6.2**		1.6		ug/L			04/03/13 17:08	1

Surrogate	*%Recovery*	*Qualifier*	*Limits*	*Prepared*	*Analyzed*	*Dil Fac*
Dibromofluoromethane (Surr)	*107*		*50 - 150*		*04/03/13 17:08*	*1*
TBA-d9 (Surr)	*108*		*50 - 150*		*04/03/13 17:08*	*1*

Client Sample Results

Client: Innovative Engineering Solutions, Inc
Project/Site: IDS Wayland

TestAmerica Job ID: 480-35387-1

Client Sample ID: MW-266Ma-2013 0329-01

Lab Sample ID: 480-35387-9

Date Collected: 03/29/13 14:05

Matrix: Water

Date Received: 04/02/13 01:40

Method: 8260C - Volatile Organic Compounds (GC/MS)

Analyte	Result	Qualifier	RL	MDL	Unit	D	Prepared	Analyzed	Dil Fac
1,1,1,2-Tetrachloroethane	ND		1.0		ug/L			04/04/13 15:47	1
1,1,1-Trichloroethane	ND		1.0		ug/L			04/04/13 15:47	1
1,1,2,2-Tetrachloroethane	ND		0.50		ug/L			04/04/13 15:47	1
1,1,2-Trichloroethane	ND		1.0		ug/L			04/04/13 15:47	1
1,1-Dichloroethane	ND		1.0		ug/L			04/04/13 15:47	1
1,1-Dichloroethene	ND		1.0		ug/L			04/04/13 15:47	1
1,1-Dichloropropene	ND		1.0		ug/L			04/04/13 15:47	1
1,2,3-Trichlorobenzene	ND		1.0		ug/L			04/04/13 15:47	1
1,2,3-Trichloropropane	ND		1.0		ug/L			04/04/13 15:47	1
1,2,4-Trichlorobenzene	ND		1.0		ug/L			04/04/13 15:47	1
1,2,4-Trimethylbenzene	ND		1.0		ug/L			04/04/13 15:47	1
1,2-Dibromo-3-Chloropropane	ND		5.0		ug/L			04/04/13 15:47	1
1,2-Dichlorobenzene	ND		1.0		ug/L			04/04/13 15:47	1
1,2-Dichloroethane	ND		1.0		ug/L			04/04/13 15:47	1
1,2-Dichloropropane	ND		1.0		ug/L			04/04/13 15:47	1
1,3,5-Trimethylbenzene	ND		1.0		ug/L			04/04/13 15:47	1
1,3-Dichlorobenzene	ND		1.0		ug/L			04/04/13 15:47	1
1,3-Dichloropropane	ND		1.0		ug/L			04/04/13 15:47	1
1,4-Dichlorobenzene	ND		1.0		ug/L			04/04/13 15:47	1
1,4-Dioxane	ND		50		ug/L			04/04/13 15:47	1
2,2-Dichloropropane	ND		1.0		ug/L			04/04/13 15:47	1
2-Butanone (MEK)	ND		10		ug/L			04/04/13 15:47	1
2-Chlorotoluene	ND		1.0		ug/L			04/04/13 15:47	1
2-Hexanone	ND		10		ug/L			04/04/13 15:47	1
4-Chlorotoluene	ND		1.0		ug/L			04/04/13 15:47	1
4-Isopropyltoluene	ND		1.0		ug/L			04/04/13 15:47	1
4-Methyl-2-pentanone (MIBK)	ND		10		ug/L			04/04/13 15:47	1
Acetone	ND		50		ug/L			04/04/13 15:47	1
Benzene	ND		1.0		ug/L			04/04/13 15:47	1
Bromobenzene	ND		1.0		ug/L			04/04/13 15:47	1
Bromoform	ND		1.0		ug/L			04/04/13 15:47	1
Bromomethane	ND		2.0		ug/L			04/04/13 15:47	1
Carbon disulfide	ND		10		ug/L			04/04/13 15:47	1
Carbon tetrachloride	ND		1.0		ug/L			04/04/13 15:47	1
Chlorobenzene	ND		1.0		ug/L			04/04/13 15:47	1
Chlorobromomethane	ND		1.0		ug/L			04/04/13 15:47	1
Chlorodibromomethane	ND		0.50		ug/L			04/04/13 15:47	1
Chloroethane	ND		2.0		ug/L			04/04/13 15:47	1
Chloroform	ND		1.0		ug/L			04/04/13 15:47	1
Chloromethane	ND		2.0		ug/L			04/04/13 15:47	1
cis-1,2-Dichloroethene	**9.1**		1.0		ug/L			04/04/13 15:47	1
cis-1,3-Dichloropropene	ND		0.40		ug/L			04/04/13 15:47	1
Dichlorobromomethane	ND		0.50		ug/L			04/04/13 15:47	1
Dichlorodifluoromethane	ND		1.0		ug/L			04/04/13 15:47	1
Ethyl ether	ND		1.0		ug/L			04/04/13 15:47	1
Ethylbenzene	ND		1.0		ug/L			04/04/13 15:47	1
Ethylene Dibromide	ND		1.0		ug/L			04/04/13 15:47	1
Hexachlorobutadiene	ND		0.40		ug/L			04/04/13 15:47	1
Isopropyl ether	ND		10		ug/L			04/04/13 15:47	1

Client Sample ID: MW-266Ma-2013 0329-01

Lab Sample ID: 480-35387-9

Date Collected: 03/29/13 14:05

Matrix: Water

Date Received: 04/02/13 01:40

Method: 8260C - Volatile Organic Compounds (GC/MS) (Continued)

Analyte	Result	Qualifier	RL	MDL	Unit	D	Prepared	Analyzed	Dil Fac
Isopropylbenzene	ND		1.0		ug/L			04/04/13 15:47	1
Methyl tert-butyl ether	ND		1.0		ug/L			04/04/13 15:47	1
Methylene Chloride	ND		1.0		ug/L			04/04/13 15:47	1
m-Xylene & p-Xylene	ND		2.0		ug/L			04/04/13 15:47	1
Naphthalene	ND		5.0		ug/L			04/04/13 15:47	1
n-Butylbenzene	ND		1.0		ug/L			04/04/13 15:47	1
N-Propylbenzene	ND		1.0		ug/L			04/04/13 15:47	1
o-Xylene	ND		1.0		ug/L			04/04/13 15:47	1
sec-Butylbenzene	ND		1.0		ug/L			04/04/13 15:47	1
Styrene	ND		1.0		ug/L			04/04/13 15:47	1
Tert-amyl methyl ether	ND		5.0		ug/L			04/04/13 15:47	1
Tert-butyl ethyl ether	ND		5.0		ug/L			04/04/13 15:47	1
tert-Butylbenzene	ND		1.0		ug/L			04/04/13 15:47	1
Tetrachloroethene	ND		1.0		ug/L			04/04/13 15:47	1
Tetrahydrofuran	ND		10		ug/L			04/04/13 15:47	1
Toluene	ND		1.0		ug/L			04/04/13 15:47	1
trans-1,2-Dichloroethene	ND		1.0		ug/L			04/04/13 15:47	1
trans-1,3-Dichloropropene	ND		0.40		ug/L			04/04/13 15:47	1
Trichloroethene	**27**		1.0		ug/L			04/04/13 15:47	1
Trichlorofluoromethane	ND		1.0		ug/L			04/04/13 15:47	1
Vinyl chloride	ND		1.0		ug/L			04/04/13 15:47	1
Dibromomethane	ND		1.0		ug/L			04/04/13 15:47	1

Surrogate	*%Recovery*	*Qualifier*	*Limits*	*Prepared*	*Analyzed*	*Dil Fac*
Toluene-d8 (Surr)	*95*		*70 - 130*		*04/04/13 15:47*	*1*
1,2-Dichloroethane-d4 (Surr)	*88*		*70 - 130*		*04/04/13 15:47*	*1*
4-Bromofluorobenzene (Surr)	*103*		*70 - 130*		*04/04/13 15:47*	*1*

Client Sample ID: MW-266Mb-2013 0401-01

Lab Sample ID: 480-35387-10

Date Collected: 04/01/13 12:25

Matrix: Water

Date Received: 04/02/13 01:40

Method: 8260C - Volatile Organic Compounds (GC/MS)

Analyte	Result	Qualifier	RL	MDL	Unit	D	Prepared	Analyzed	Dil Fac
1,1,1,2-Tetrachloroethane	ND		1.0		ug/L			04/05/13 01:21	1
1,1,1-Trichloroethane	ND		1.0		ug/L			04/05/13 01:21	1
1,1,2,2-Tetrachloroethane	ND		0.50		ug/L			04/05/13 01:21	1
1,1,2-Trichloroethane	ND		1.0		ug/L			04/05/13 01:21	1
1,1-Dichloroethane	ND		1.0		ug/L			04/05/13 01:21	1
1,1-Dichloroethene	ND		1.0		ug/L			04/05/13 01:21	1
1,1-Dichloropropene	ND		1.0		ug/L			04/05/13 01:21	1
1,2,3-Trichlorobenzene	ND		1.0		ug/L			04/05/13 01:21	1
1,2,3-Trichloropropane	ND		1.0		ug/L			04/05/13 01:21	1
1,2,4-Trichlorobenzene	ND		1.0		ug/L			04/05/13 01:21	1
1,2,4-Trimethylbenzene	ND		1.0		ug/L			04/05/13 01:21	1
1,2-Dibromo-3-Chloropropane	ND		5.0		ug/L			04/05/13 01:21	1
1,2-Dichlorobenzene	ND		1.0		ug/L			04/05/13 01:21	1
1,2-Dichloroethane	ND		1.0		ug/L			04/05/13 01:21	1
1,2-Dichloropropane	ND		1.0		ug/L			04/05/13 01:21	1
1,3,5-Trimethylbenzene	ND		1.0		ug/L			04/05/13 01:21	1

Client Sample ID: MW-266Mb-2013 0401-01
Date Collected: 04/01/13 12:25
Date Received: 04/02/13 01:40

Lab Sample ID: 480-35387-10
Matrix: Water

Method: 8260C - Volatile Organic Compounds (GC/MS) (Continued)

Analyte	Result	Qualifier	RL	MDL	Unit	D	Prepared	Analyzed	Dil Fac
1,3-Dichlorobenzene	ND		1.0		ug/L			04/05/13 01:21	1
1,3-Dichloropropane	ND		1.0		ug/L			04/05/13 01:21	1
1,4-Dichlorobenzene	ND		1.0		ug/L			04/05/13 01:21	1
1,4-Dioxane	ND		50		ug/L			04/05/13 01:21	1
2,2-Dichloropropane	ND		1.0		ug/L			04/05/13 01:21	1
2-Butanone (MEK)	ND		10		ug/L			04/05/13 01:21	1
2-Chlorotoluene	ND		1.0		ug/L			04/05/13 01:21	1
2-Hexanone	ND		10		ug/L			04/05/13 01:21	1
4-Chlorotoluene	ND		1.0		ug/L			04/05/13 01:21	1
4-Isopropyltoluene	ND		1.0		ug/L			04/05/13 01:21	1
4-Methyl-2-pentanone (MIBK)	ND		10		ug/L			04/05/13 01:21	1
Acetone	ND		50		ug/L			04/05/13 01:21	1
Benzene	ND		1.0		ug/L			04/05/13 01:21	1
Bromobenzene	ND		1.0		ug/L			04/05/13 01:21	1
Bromoform	ND		1.0		ug/L			04/05/13 01:21	1
Bromomethane	ND		2.0		ug/L			04/05/13 01:21	1
Carbon disulfide	ND		10		ug/L			04/05/13 01:21	1
Carbon tetrachloride	ND		1.0		ug/L			04/05/13 01:21	1
Chlorobenzene	ND		1.0		ug/L			04/05/13 01:21	1
Chlorobromomethane	ND		1.0		ug/L			04/05/13 01:21	1
Chlorodibromomethane	ND		0.50		ug/L			04/05/13 01:21	1
Chloroethane	ND	*	2.0		ug/L			04/05/13 01:21	1
Chloroform	ND		1.0		ug/L			04/05/13 01:21	1
Chloromethane	ND		2.0		ug/L			04/05/13 01:21	1
cis-1,2-Dichloroethene	**80**		1.0		ug/L			04/05/13 01:21	1
cis-1,3-Dichloropropene	ND		0.40		ug/L			04/05/13 01:21	1
Dichlorobromomethane	ND		0.50		ug/L			04/05/13 01:21	1
Dichlorodifluoromethane	ND		1.0		ug/L			04/05/13 01:21	1
Ethyl ether	ND		1.0		ug/L			04/05/13 01:21	1
Ethylbenzene	ND		1.0		ug/L			04/05/13 01:21	1
Ethylene Dibromide	ND		1.0		ug/L			04/05/13 01:21	1
Hexachlorobutadiene	ND		0.40		ug/L			04/05/13 01:21	1
Isopropyl ether	ND		10		ug/L			04/05/13 01:21	1
Isopropylbenzene	ND		1.0		ug/L			04/05/13 01:21	1
Methyl tert-butyl ether	ND		1.0		ug/L			04/05/13 01:21	1
Methylene Chloride	ND		1.0		ug/L			04/05/13 01:21	1
m-Xylene & p-Xylene	ND		2.0		ug/L			04/05/13 01:21	1
Naphthalene	ND		5.0		ug/L			04/05/13 01:21	1
n-Butylbenzene	ND		1.0		ug/L			04/05/13 01:21	1
N-Propylbenzene	ND		1.0		ug/L			04/05/13 01:21	1
o-Xylene	ND		1.0		ug/L			04/05/13 01:21	1
sec-Butylbenzene	ND		1.0		ug/L			04/05/13 01:21	1
Styrene	ND		1.0		ug/L			04/05/13 01:21	1
Tert-amyl methyl ether	ND		5.0		ug/L			04/05/13 01:21	1
Tert-butyl ethyl ether	ND		5.0		ug/L			04/05/13 01:21	1
tert-Butylbenzene	ND		1.0		ug/L			04/05/13 01:21	1
Tetrachloroethene	**13**		1.0		ug/L			04/05/13 01:21	1
Tetrahydrofuran	ND		10		ug/L			04/05/13 01:21	1
Toluene	ND		1.0		ug/L			04/05/13 01:21	1

Client Sample ID: MW-266Mb-2013 0401-01

Lab Sample ID: 480-35387-10

Date Collected: 04/01/13 12:25

Matrix: Water

Date Received: 04/02/13 01:40

Method: 8260C - Volatile Organic Compounds (GC/MS) (Continued)

Analyte	Result	Qualifier	RL	MDL	Unit	D	Prepared	Analyzed	Dil Fac
trans-1,2-Dichloroethene	ND		1.0		ug/L			04/05/13 01:21	1
trans-1,3-Dichloropropene	ND		0.40		ug/L			04/05/13 01:21	1
Trichloroethene	**53**		1.0		ug/L			04/05/13 01:21	1
Trichlorofluoromethane	ND		1.0		ug/L			04/05/13 01:21	1
Vinyl chloride	**7.5**		1.0		ug/L			04/05/13 01:21	1
Dibromomethane	ND		1.0		ug/L			04/05/13 01:21	1

Surrogate	*%Recovery*	*Qualifier*	*Limits*	*Prepared*	*Analyzed*	*Dil Fac*
Toluene-d8 (Surr)	*97*		*70 - 130*		*04/05/13 01:21*	*1*
1,2-Dichloroethane-d4 (Surr)	*85*		*70 - 130*		*04/05/13 01:21*	*1*
4-Bromofluorobenzene (Surr)	*103*		*70 - 130*		*04/05/13 01:21*	*1*

Client Sample ID: MW-267S-2013 0329-01

Lab Sample ID: 480-35387-11

Date Collected: 03/29/13 14:50

Matrix: Water

Date Received: 04/02/13 01:40

Method: 8260B SIM - Volatile Organic Compounds (GC/MS)

Analyte	Result	Qualifier	RL	MDL	Unit	D	Prepared	Analyzed	Dil Fac
1,4-Dioxane	**7.4**		1.6		ug/L			04/03/13 17:32	1

Surrogate	*%Recovery*	*Qualifier*	*Limits*	*Prepared*	*Analyzed*	*Dil Fac*
Dibromofluoromethane (Surr)	*102*		*50 - 150*		*04/03/13 17:32*	*1*
TBA-d9 (Surr)	*91*		*50 - 150*		*04/03/13 17:32*	*1*

Method: 8260C - Volatile Organic Compounds (GC/MS)

Analyte	Result	Qualifier	RL	MDL	Unit	D	Prepared	Analyzed	Dil Fac
1,1,1,2-Tetrachloroethane	ND		5.0		ug/L			04/05/13 01:45	5
1,1,1-Trichloroethane	ND		5.0		ug/L			04/05/13 01:45	5
1,1,2,2-Tetrachloroethane	ND		2.5		ug/L			04/05/13 01:45	5
1,1,2-Trichloroethane	ND		5.0		ug/L			04/05/13 01:45	5
1,1-Dichloroethane	ND		5.0		ug/L			04/05/13 01:45	5
1,1-Dichloroethene	ND		5.0		ug/L			04/05/13 01:45	5
1,1-Dichloropropene	ND		5.0		ug/L			04/05/13 01:45	5
1,2,3-Trichlorobenzene	ND		5.0		ug/L			04/05/13 01:45	5
1,2,3-Trichloropropane	ND		5.0		ug/L			04/05/13 01:45	5
1,2,4-Trichlorobenzene	ND		5.0		ug/L			04/05/13 01:45	5
1,2,4-Trimethylbenzene	ND		5.0		ug/L			04/05/13 01:45	5
1,2-Dibromo-3-Chloropropane	ND		25		ug/L			04/05/13 01:45	5
1,2-Dichlorobenzene	ND		5.0		ug/L			04/05/13 01:45	5
1,2-Dichloroethane	ND		5.0		ug/L			04/05/13 01:45	5
1,2-Dichloropropane	ND		5.0		ug/L			04/05/13 01:45	5
1,3,5-Trimethylbenzene	ND		5.0		ug/L			04/05/13 01:45	5
1,3-Dichlorobenzene	ND		5.0		ug/L			04/05/13 01:45	5
1,3-Dichloropropane	ND		5.0		ug/L			04/05/13 01:45	5
1,4-Dichlorobenzene	ND		5.0		ug/L			04/05/13 01:45	5
1,4-Dioxane	ND		250		ug/L			04/05/13 01:45	5
2,2-Dichloropropane	ND		5.0		ug/L			04/05/13 01:45	5
2-Butanone (MEK)	ND		50		ug/L			04/05/13 01:45	5
2-Chlorotoluene	ND		5.0		ug/L			04/05/13 01:45	5
2-Hexanone	ND		50		ug/L			04/05/13 01:45	5

Client Sample ID: MW-267S-2013 0329-01

Lab Sample ID: 480-35387-11

Date Collected: 03/29/13 14:50

Matrix: Water

Date Received: 04/02/13 01:40

Method: 8260C - Volatile Organic Compounds (GC/MS) (Continued)

Analyte	Result	Qualifier	RL	MDL	Unit	D	Prepared	Analyzed	Dil Fac
4-Chlorotoluene	ND		5.0		ug/L			04/05/13 01:45	5
4-Isopropyltoluene	ND		5.0		ug/L			04/05/13 01:45	5
4-Methyl-2-pentanone (MIBK)	ND		50		ug/L			04/05/13 01:45	5
Acetone	ND		250		ug/L			04/05/13 01:45	5
Benzene	ND		5.0		ug/L			04/05/13 01:45	5
Bromobenzene	ND		5.0		ug/L			04/05/13 01:45	5
Bromoform	ND		5.0		ug/L			04/05/13 01:45	5
Bromomethane	ND		10		ug/L			04/05/13 01:45	5
Carbon disulfide	ND		50		ug/L			04/05/13 01:45	5
Carbon tetrachloride	ND		5.0		ug/L			04/05/13 01:45	5
Chlorobenzene	ND		5.0		ug/L			04/05/13 01:45	5
Chlorobromomethane	ND		5.0		ug/L			04/05/13 01:45	5
Chlorodibromomethane	ND		2.5		ug/L			04/05/13 01:45	5
Chloroethane	ND	*	10		ug/L			04/05/13 01:45	5
Chloroform	ND		5.0		ug/L			04/05/13 01:45	5
Chloromethane	ND		10		ug/L			04/05/13 01:45	5
cis-1,2-Dichloroethene	**72**		5.0		ug/L			04/05/13 01:45	5
cis-1,3-Dichloropropene	ND		2.0		ug/L			04/05/13 01:45	5
Dichlorobromomethane	ND		2.5		ug/L			04/05/13 01:45	5
Dichlorodifluoromethane	ND		5.0		ug/L			04/05/13 01:45	5
Ethyl ether	ND		5.0		ug/L			04/05/13 01:45	5
Ethylbenzene	ND		5.0		ug/L			04/05/13 01:45	5
Ethylene Dibromide	ND		5.0		ug/L			04/05/13 01:45	5
Hexachlorobutadiene	ND		2.0		ug/L			04/05/13 01:45	5
Isopropyl ether	ND		50		ug/L			04/05/13 01:45	5
Isopropylbenzene	ND		5.0		ug/L			04/05/13 01:45	5
Methyl tert-butyl ether	ND		5.0		ug/L			04/05/13 01:45	5
Methylene Chloride	ND		5.0		ug/L			04/05/13 01:45	5
m-Xylene & p-Xylene	ND		10		ug/L			04/05/13 01:45	5
Naphthalene	ND		25		ug/L			04/05/13 01:45	5
n-Butylbenzene	ND		5.0		ug/L			04/05/13 01:45	5
N-Propylbenzene	ND		5.0		ug/L			04/05/13 01:45	5
o-Xylene	ND		5.0		ug/L			04/05/13 01:45	5
sec-Butylbenzene	ND		5.0		ug/L			04/05/13 01:45	5
Styrene	ND		5.0		ug/L			04/05/13 01:45	5
Tert-amyl methyl ether	ND		25		ug/L			04/05/13 01:45	5
Tert-butyl ethyl ether	ND		25		ug/L			04/05/13 01:45	5
tert-Butylbenzene	ND		5.0		ug/L			04/05/13 01:45	5
Tetrachloroethene	**7.6**		5.0		ug/L			04/05/13 01:45	5
Tetrahydrofuran	ND		50		ug/L			04/05/13 01:45	5
Toluene	ND		5.0		ug/L			04/05/13 01:45	5
trans-1,2-Dichloroethene	ND		5.0		ug/L			04/05/13 01:45	5
trans-1,3-Dichloropropene	ND		2.0		ug/L			04/05/13 01:45	5
Trichloroethene	**370**		5.0		ug/L			04/05/13 01:45	5
Trichlorofluoromethane	ND		5.0		ug/L			04/05/13 01:45	5
Vinyl chloride	ND		5.0		ug/L			04/05/13 01:45	5
Dibromomethane	ND		5.0		ug/L			04/05/13 01:45	5

Surrogate	*%Recovery*	*Qualifier*	*Limits*	*Prepared*	*Analyzed*	*Dil Fac*
Toluene-d8 (Surr)	*96*		*70 - 130*		*04/05/13 01:45*	*5*

Client Sample ID: MW-267S-2013 0329-01

Lab Sample ID: 480-35387-11

Date Collected: 03/29/13 14:50

Matrix: Water

Date Received: 04/02/13 01:40

Method: 8260C - Volatile Organic Compounds (GC/MS) (Continued)

Surrogate	*%Recovery*	*Qualifier*	*Limits*	*Prepared*	*Analyzed*	*Dil Fac*
1,2-Dichloroethane-d4 (Surr)	*84*		*70 - 130*		*04/05/13 01:45*	*5*
4-Bromofluorobenzene (Surr)	*104*		*70 - 130*		*04/05/13 01:45*	*5*

Client Sample ID: MW-267M-2013 0329-01

Lab Sample ID: 480-35387-12

Date Collected: 03/29/13 14:15

Matrix: Water

Date Received: 04/02/13 01:40

Method: 8260C - Volatile Organic Compounds (GC/MS)

Analyte	Result	Qualifier	RL	MDL	Unit	D	Prepared	Analyzed	Dil Fac
1,1,1,2-Tetrachloroethane	ND		5.0		ug/L			04/04/13 16:58	5
1,1,1-Trichloroethane	ND		5.0		ug/L			04/04/13 16:58	5
1,1,2,2-Tetrachloroethane	ND		2.5		ug/L			04/04/13 16:58	5
1,1,2-Trichloroethane	ND		5.0		ug/L			04/04/13 16:58	5
1,1-Dichloroethane	ND		5.0		ug/L			04/04/13 16:58	5
1,1-Dichloroethene	ND		5.0		ug/L			04/04/13 16:58	5
1,1-Dichloropropene	ND		5.0		ug/L			04/04/13 16:58	5
1,2,3-Trichlorobenzene	ND		5.0		ug/L			04/04/13 16:58	5
1,2,3-Trichloropropane	ND		5.0		ug/L			04/04/13 16:58	5
1,2,4-Trichlorobenzene	ND		5.0		ug/L			04/04/13 16:58	5
1,2,4-Trimethylbenzene	ND		5.0		ug/L			04/04/13 16:58	5
1,2-Dibromo-3-Chloropropane	ND		25		ug/L			04/04/13 16:58	5
1,2-Dichlorobenzene	ND		5.0		ug/L			04/04/13 16:58	5
1,2-Dichloroethane	ND		5.0		ug/L			04/04/13 16:58	5
1,2-Dichloropropane	ND		5.0		ug/L			04/04/13 16:58	5
1,3,5-Trimethylbenzene	ND		5.0		ug/L			04/04/13 16:58	5
1,3-Dichlorobenzene	ND		5.0		ug/L			04/04/13 16:58	5
1,3-Dichloropropane	ND		5.0		ug/L			04/04/13 16:58	5
1,4-Dichlorobenzene	ND		5.0		ug/L			04/04/13 16:58	5
1,4-Dioxane	ND		250		ug/L			04/04/13 16:58	5
2,2-Dichloropropane	ND		5.0		ug/L			04/04/13 16:58	5
2-Butanone (MEK)	ND		50		ug/L			04/04/13 16:58	5
2-Chlorotoluene	ND		5.0		ug/L			04/04/13 16:58	5
2-Hexanone	ND		50		ug/L			04/04/13 16:58	5
4-Chlorotoluene	ND		5.0		ug/L			04/04/13 16:58	5
4-Isopropyltoluene	ND		5.0		ug/L			04/04/13 16:58	5
4-Methyl-2-pentanone (MIBK)	ND		50		ug/L			04/04/13 16:58	5
Acetone	ND		250		ug/L			04/04/13 16:58	5
Benzene	ND		5.0		ug/L			04/04/13 16:58	5
Bromobenzene	ND		5.0		ug/L			04/04/13 16:58	5
Bromoform	ND		5.0		ug/L			04/04/13 16:58	5
Bromomethane	ND		10		ug/L			04/04/13 16:58	5
Carbon disulfide	ND		50		ug/L			04/04/13 16:58	5
Carbon tetrachloride	ND		5.0		ug/L			04/04/13 16:58	5
Chlorobenzene	ND		5.0		ug/L			04/04/13 16:58	5
Chlorobromomethane	ND		5.0		ug/L			04/04/13 16:58	5
Chlorodibromomethane	ND		2.5		ug/L			04/04/13 16:58	5
Chloroethane	ND		10		ug/L			04/04/13 16:58	5
Chloroform	ND		5.0		ug/L			04/04/13 16:58	5
Chloromethane	ND		10		ug/L			04/04/13 16:58	5

Client Sample ID: MW-267M-2013 0329-01

Lab Sample ID: 480-35387-12

Date Collected: 03/29/13 14:15

Matrix: Water

Date Received: 04/02/13 01:40

Method: 8260C - Volatile Organic Compounds (GC/MS) (Continued)

Analyte	Result	Qualifier	RL	MDL	Unit	D	Prepared	Analyzed	Dil Fac
cis-1,3-Dichloropropene	ND		2.0		ug/L			04/04/13 16:58	5
Dichlorobromomethane	ND		2.5		ug/L			04/04/13 16:58	5
Dichlorodifluoromethane	ND		5.0		ug/L			04/04/13 16:58	5
Ethyl ether	ND		5.0		ug/L			04/04/13 16:58	5
Ethylbenzene	ND		5.0		ug/L			04/04/13 16:58	5
Ethylene Dibromide	ND		5.0		ug/L			04/04/13 16:58	5
Hexachlorobutadiene	ND		2.0		ug/L			04/04/13 16:58	5
Isopropyl ether	ND		50		ug/L			04/04/13 16:58	5
Isopropylbenzene	ND		5.0		ug/L			04/04/13 16:58	5
Methyl tert-butyl ether	ND		5.0		ug/L			04/04/13 16:58	5
Methylene Chloride	ND		5.0		ug/L			04/04/13 16:58	5
m-Xylene & p-Xylene	ND		10		ug/L			04/04/13 16:58	5
Naphthalene	ND		25		ug/L			04/04/13 16:58	5
n-Butylbenzene	ND		5.0		ug/L			04/04/13 16:58	5
N-Propylbenzene	ND		5.0		ug/L			04/04/13 16:58	5
o-Xylene	ND		5.0		ug/L			04/04/13 16:58	5
sec-Butylbenzene	ND		5.0		ug/L			04/04/13 16:58	5
Styrene	ND		5.0		ug/L			04/04/13 16:58	5
Tert-amyl methyl ether	ND		25		ug/L			04/04/13 16:58	5
Tert-butyl ethyl ether	ND		25		ug/L			04/04/13 16:58	5
tert-Butylbenzene	ND		5.0		ug/L			04/04/13 16:58	5
Tetrachloroethene	**14**		5.0		ug/L			04/04/13 16:58	5
Tetrahydrofuran	ND		50		ug/L			04/04/13 16:58	5
Toluene	ND		5.0		ug/L			04/04/13 16:58	5
trans-1,2-Dichloroethene	ND		5.0		ug/L			04/04/13 16:58	5
trans-1,3-Dichloropropene	ND		2.0		ug/L			04/04/13 16:58	5
Trichloroethene	**350**		5.0		ug/L			04/04/13 16:58	5
Trichlorofluoromethane	ND		5.0		ug/L			04/04/13 16:58	5
Vinyl chloride	**20**		5.0		ug/L			04/04/13 16:58	5
Dibromomethane	ND		5.0		ug/L			04/04/13 16:58	5

Surrogate	*%Recovery*	*Qualifier*	*Limits*	*Prepared*	*Analyzed*	*Dil Fac*
Toluene-d8 (Surr)	*96*		*70 - 130*		*04/04/13 16:58*	*5*
1,2-Dichloroethane-d4 (Surr)	*87*		*70 - 130*		*04/04/13 16:58*	*5*
4-Bromofluorobenzene (Surr)	*105*		*70 - 130*		*04/04/13 16:58*	*5*

Method: 8260C - Volatile Organic Compounds (GC/MS) - DL

Analyte	Result	Qualifier	RL	MDL	Unit	D	Prepared	Analyzed	Dil Fac
cis-1,2-Dichloroethene	**590**		10		ug/L			04/05/13 02:08	10

Surrogate	*%Recovery*	*Qualifier*	*Limits*	*Prepared*	*Analyzed*	*Dil Fac*
Toluene-d8 (Surr)	*96*		*70 - 130*		*04/05/13 02:08*	*10*
1,2-Dichloroethane-d4 (Surr)	*88*		*70 - 130*		*04/05/13 02:08*	*10*
4-Bromofluorobenzene (Surr)	*103*		*70 - 130*		*04/05/13 02:08*	*10*

Client Sample ID: MW-268M-2013 0329-01

Lab Sample ID: 480-35387-13

Date Collected: 03/29/13 08:35

Matrix: Water

Date Received: 04/02/13 01:40

Method: 8260B SIM - Volatile Organic Compounds (GC/MS)

Analyte	Result	Qualifier	RL	MDL	Unit	D	Prepared	Analyzed	Dil Fac
1,4-Dioxane	14		1.6		ug/L			04/03/13 17:56	1

Surrogate	*%Recovery*	*Qualifier*	*Limits*	*Prepared*	*Analyzed*	*Dil Fac*
Dibromofluoromethane (Surr)	*95*		*50 - 150*		*04/03/13 17:56*	*1*
TBA-d9 (Surr)	*92*		*50 - 150*		*04/03/13 17:56*	*1*

Method: 8260C - Volatile Organic Compounds (GC/MS)

Analyte	Result	Qualifier	RL	MDL	Unit	D	Prepared	Analyzed	Dil Fac
1,1,1,2-Tetrachloroethane	ND		25		ug/L			04/05/13 02:32	25
1,1,1-Trichloroethane	ND		25		ug/L			04/05/13 02:32	25
1,1,2,2-Tetrachloroethane	ND		13		ug/L			04/05/13 02:32	25
1,1,2-Trichloroethane	ND		25		ug/L			04/05/13 02:32	25
1,1-Dichloroethane	ND		25		ug/L			04/05/13 02:32	25
1,1-Dichloroethene	ND		25		ug/L			04/05/13 02:32	25
1,1-Dichloropropene	ND		25		ug/L			04/05/13 02:32	25
1,2,3-Trichlorobenzene	ND		25		ug/L			04/05/13 02:32	25
1,2,3-Trichloropropane	ND		25		ug/L			04/05/13 02:32	25
1,2,4-Trichlorobenzene	ND		25		ug/L			04/05/13 02:32	25
1,2,4-Trimethylbenzene	ND		25		ug/L			04/05/13 02:32	25
1,2-Dibromo-3-Chloropropane	ND		130		ug/L			04/05/13 02:32	25
1,2-Dichlorobenzene	ND		25		ug/L			04/05/13 02:32	25
1,2-Dichloroethane	ND		25		ug/L			04/05/13 02:32	25
1,2-Dichloropropane	ND		25		ug/L			04/05/13 02:32	25
1,3,5-Trimethylbenzene	ND		25		ug/L			04/05/13 02:32	25
1,3-Dichlorobenzene	ND		25		ug/L			04/05/13 02:32	25
1,3-Dichloropropane	ND		25		ug/L			04/05/13 02:32	25
1,4-Dichlorobenzene	ND		25		ug/L			04/05/13 02:32	25
1,4-Dioxane	ND		1300		ug/L			04/05/13 02:32	25
2,2-Dichloropropane	ND		25		ug/L			04/05/13 02:32	25
2-Butanone (MEK)	ND		250		ug/L			04/05/13 02:32	25
2-Chlorotoluene	ND		25		ug/L			04/05/13 02:32	25
2-Hexanone	ND		250		ug/L			04/05/13 02:32	25
4-Chlorotoluene	ND		25		ug/L			04/05/13 02:32	25
4-Isopropyltoluene	ND		25		ug/L			04/05/13 02:32	25
4-Methyl-2-pentanone (MIBK)	ND		250		ug/L			04/05/13 02:32	25
Acetone	ND		1300		ug/L			04/05/13 02:32	25
Benzene	ND		25		ug/L			04/05/13 02:32	25
Bromobenzene	ND		25		ug/L			04/05/13 02:32	25
Bromoform	ND		25		ug/L			04/05/13 02:32	25
Bromomethane	ND		50		ug/L			04/05/13 02:32	25
Carbon disulfide	ND		250		ug/L			04/05/13 02:32	25
Carbon tetrachloride	ND		25		ug/L			04/05/13 02:32	25
Chlorobenzene	ND		25		ug/L			04/05/13 02:32	25
Chlorobromomethane	ND		25		ug/L			04/05/13 02:32	25
Chlorodibromomethane	ND		13		ug/L			04/05/13 02:32	25
Chloroethane	ND	*	50		ug/L			04/05/13 02:32	25
Chloroform	ND		25		ug/L			04/05/13 02:32	25
Chloromethane	ND		50		ug/L			04/05/13 02:32	25
cis-1,2-Dichloroethene	2100		25		ug/L			04/05/13 02:32	25
cis-1,3-Dichloropropene	ND		10		ug/L			04/05/13 02:32	25

Client Sample ID: MW-268M-2013 0329-01

Lab Sample ID: 480-35387-13

Date Collected: 03/29/13 08:35

Matrix: Water

Date Received: 04/02/13 01:40

Method: 8260C - Volatile Organic Compounds (GC/MS) (Continued)

Analyte	Result	Qualifier	RL	MDL	Unit	D	Prepared	Analyzed	Dil Fac
Dichlorobromomethane	ND		13		ug/L			04/05/13 02:32	25
Dichlorodifluoromethane	ND		25		ug/L			04/05/13 02:32	25
Ethyl ether	ND		25		ug/L			04/05/13 02:32	25
Ethylbenzene	ND		25		ug/L			04/05/13 02:32	25
Ethylene Dibromide	ND		25		ug/L			04/05/13 02:32	25
Hexachlorobutadiene	ND		10		ug/L			04/05/13 02:32	25
Isopropyl ether	ND		250		ug/L			04/05/13 02:32	25
Isopropylbenzene	ND		25		ug/L			04/05/13 02:32	25
Methyl tert-butyl ether	ND		25		ug/L			04/05/13 02:32	25
Methylene Chloride	ND		25		ug/L			04/05/13 02:32	25
m-Xylene & p-Xylene	ND		50		ug/L			04/05/13 02:32	25
Naphthalene	ND		130		ug/L			04/05/13 02:32	25
n-Butylbenzene	ND		25		ug/L			04/05/13 02:32	25
N-Propylbenzene	ND		25		ug/L			04/05/13 02:32	25
o-Xylene	ND		25		ug/L			04/05/13 02:32	25
sec-Butylbenzene	ND		25		ug/L			04/05/13 02:32	25
Styrene	ND		25		ug/L			04/05/13 02:32	25
Tert-amyl methyl ether	ND		130		ug/L			04/05/13 02:32	25
Tert-butyl ethyl ether	ND		130		ug/L			04/05/13 02:32	25
tert-Butylbenzene	ND		25		ug/L			04/05/13 02:32	25
Tetrachloroethene	**42**		25		ug/L			04/05/13 02:32	25
Tetrahydrofuran	ND		250		ug/L			04/05/13 02:32	25
Toluene	ND		25		ug/L			04/05/13 02:32	25
trans-1,2-Dichloroethene	ND		25		ug/L			04/05/13 02:32	25
trans-1,3-Dichloropropene	ND		10		ug/L			04/05/13 02:32	25
Trichloroethene	**1100**		25		ug/L			04/05/13 02:32	25
Trichlorofluoromethane	ND		25		ug/L			04/05/13 02:32	25
Vinyl chloride	**91**		25		ug/L			04/05/13 02:32	25
Dibromomethane	ND		25		ug/L			04/05/13 02:32	25

Surrogate	*%Recovery*	*Qualifier*	*Limits*	*Prepared*	*Analyzed*	*Dil Fac*
Toluene-d8 (Surr)	*96*		*70 - 130*		*04/05/13 02:32*	*25*
1,2-Dichloroethane-d4 (Surr)	*86*		*70 - 130*		*04/05/13 02:32*	*25*
4-Bromofluorobenzene (Surr)	*103*		*70 - 130*		*04/05/13 02:32*	*25*

Client Sample ID: MW-268D-2013 0401

Lab Sample ID: 480-35387-14

Date Collected: 04/01/13 09:25

Matrix: Water

Date Received: 04/02/13 01:40

Method: 8260C - Volatile Organic Compounds (GC/MS)

Analyte	Result	Qualifier	RL	MDL	Unit	D	Prepared	Analyzed	Dil Fac
1,1,1,2-Tetrachloroethane	ND		1.0		ug/L			04/04/13 17:46	1
1,1,1-Trichloroethane	ND		1.0		ug/L			04/04/13 17:46	1
1,1,2,2-Tetrachloroethane	ND		0.50		ug/L			04/04/13 17:46	1
1,1,2-Trichloroethane	ND		1.0		ug/L			04/04/13 17:46	1
1,1-Dichloroethane	ND		1.0		ug/L			04/04/13 17:46	1
1,1-Dichloroethene	ND		1.0		ug/L			04/04/13 17:46	1
1,1-Dichloropropene	ND		1.0		ug/L			04/04/13 17:46	1
1,2,3-Trichlorobenzene	ND		1.0		ug/L			04/04/13 17:46	1
1,2,3-Trichloropropane	ND		1.0		ug/L			04/04/13 17:46	1

Client Sample ID: MW-268D-2013 0401
Date Collected: 04/01/13 09:25
Date Received: 04/02/13 01:40

Lab Sample ID: 480-35387-14
Matrix: Water

Method: 8260C - Volatile Organic Compounds (GC/MS) (Continued)

Analyte	Result	Qualifier	RL	MDL	Unit	D	Prepared	Analyzed	Dil Fac
1,2,4-Trichlorobenzene	ND		1.0		ug/L			04/04/13 17:46	1
1,2,4-Trimethylbenzene	ND		1.0		ug/L			04/04/13 17:46	1
1,2-Dibromo-3-Chloropropane	ND		5.0		ug/L			04/04/13 17:46	1
1,2-Dichlorobenzene	ND		1.0		ug/L			04/04/13 17:46	1
1,2-Dichloroethane	ND		1.0		ug/L			04/04/13 17:46	1
1,2-Dichloropropane	ND		1.0		ug/L			04/04/13 17:46	1
1,3,5-Trimethylbenzene	ND		1.0		ug/L			04/04/13 17:46	1
1,3-Dichlorobenzene	ND		1.0		ug/L			04/04/13 17:46	1
1,3-Dichloropropane	ND		1.0		ug/L			04/04/13 17:46	1
1,4-Dichlorobenzene	ND		1.0		ug/L			04/04/13 17:46	1
1,4-Dioxane	ND		50		ug/L			04/04/13 17:46	1
2,2-Dichloropropane	ND		1.0		ug/L			04/04/13 17:46	1
2-Butanone (MEK)	ND		10		ug/L			04/04/13 17:46	1
2-Chlorotoluene	ND		1.0		ug/L			04/04/13 17:46	1
2-Hexanone	ND		10		ug/L			04/04/13 17:46	1
4-Chlorotoluene	ND		1.0		ug/L			04/04/13 17:46	1
4-Isopropyltoluene	ND		1.0		ug/L			04/04/13 17:46	1
4-Methyl-2-pentanone (MIBK)	ND		10		ug/L			04/04/13 17:46	1
Acetone	ND		50		ug/L			04/04/13 17:46	1
Benzene	ND		1.0		ug/L			04/04/13 17:46	1
Bromobenzene	ND		1.0		ug/L			04/04/13 17:46	1
Bromoform	ND		1.0		ug/L			04/04/13 17:46	1
Bromomethane	ND		2.0		ug/L			04/04/13 17:46	1
Carbon disulfide	ND		10		ug/L			04/04/13 17:46	1
Carbon tetrachloride	ND		1.0		ug/L			04/04/13 17:46	1
Chlorobenzene	ND		1.0		ug/L			04/04/13 17:46	1
Chlorobromomethane	ND		1.0		ug/L			04/04/13 17:46	1
Chlorodibromomethane	ND		0.50		ug/L			04/04/13 17:46	1
Chloroethane	ND		2.0		ug/L			04/04/13 17:46	1
Chloroform	ND		1.0		ug/L			04/04/13 17:46	1
Chloromethane	ND		2.0		ug/L			04/04/13 17:46	1
cis-1,2-Dichloroethene	**9.3**		1.0		ug/L			04/04/13 17:46	1
cis-1,3-Dichloropropene	ND		0.40		ug/L			04/04/13 17:46	1
Dichlorobromomethane	ND		0.50		ug/L			04/04/13 17:46	1
Dichlorodifluoromethane	ND		1.0		ug/L			04/04/13 17:46	1
Ethyl ether	ND		1.0		ug/L			04/04/13 17:46	1
Ethylbenzene	ND		1.0		ug/L			04/04/13 17:46	1
Ethylene Dibromide	ND		1.0		ug/L			04/04/13 17:46	1
Hexachlorobutadiene	ND		0.40		ug/L			04/04/13 17:46	1
Isopropyl ether	ND		10		ug/L			04/04/13 17:46	1
Isopropylbenzene	ND		1.0		ug/L			04/04/13 17:46	1
Methyl tert-butyl ether	ND		1.0		ug/L			04/04/13 17:46	1
Methylene Chloride	ND		1.0		ug/L			04/04/13 17:46	1
m-Xylene & p-Xylene	ND		2.0		ug/L			04/04/13 17:46	1
Naphthalene	ND		5.0		ug/L			04/04/13 17:46	1
n-Butylbenzene	ND		1.0		ug/L			04/04/13 17:46	1
N-Propylbenzene	ND		1.0		ug/L			04/04/13 17:46	1
o-Xylene	ND		1.0		ug/L			04/04/13 17:46	1
sec-Butylbenzene	ND		1.0		ug/L			04/04/13 17:46	1

Client Sample ID: MW-268D-2013 0401

Lab Sample ID: 480-35387-14

Date Collected: 04/01/13 09:25

Matrix: Water

Date Received: 04/02/13 01:40

Method: 8260C - Volatile Organic Compounds (GC/MS) (Continued)

Analyte	Result	Qualifier	RL	MDL	Unit	D	Prepared	Analyzed	Dil Fac
Styrene	ND		1.0		ug/L			04/04/13 17:46	1
Tert-amyl methyl ether	ND		5.0		ug/L			04/04/13 17:46	1
Tert-butyl ethyl ether	ND		5.0		ug/L			04/04/13 17:46	1
tert-Butylbenzene	ND		1.0		ug/L			04/04/13 17:46	1
Tetrachloroethene	ND		1.0		ug/L			04/04/13 17:46	1
Tetrahydrofuran	ND		10		ug/L			04/04/13 17:46	1
Toluene	ND		1.0		ug/L			04/04/13 17:46	1
trans-1,2-Dichloroethene	ND		1.0		ug/L			04/04/13 17:46	1
trans-1,3-Dichloropropene	ND		0.40		ug/L			04/04/13 17:46	1
Trichloroethene	**6.3**		1.0		ug/L			04/04/13 17:46	1
Trichlorofluoromethane	ND		1.0		ug/L			04/04/13 17:46	1
Vinyl chloride	ND		1.0		ug/L			04/04/13 17:46	1
Dibromomethane	ND		1.0		ug/L			04/04/13 17:46	1

Surrogate	*%Recovery*	*Qualifier*	*Limits*	*Prepared*	*Analyzed*	*Dil Fac*
Toluene-d8 (Surr)	*96*		*70 - 130*		*04/04/13 17:46*	*1*
1,2-Dichloroethane-d4 (Surr)	*88*		*70 - 130*		*04/04/13 17:46*	*1*
4-Bromofluorobenzene (Surr)	*102*		*70 - 130*		*04/04/13 17:46*	*1*

Client Sample ID: MW-269Ma-2013 0329-01

Lab Sample ID: 480-35387-15

Date Collected: 03/29/13 12:03

Matrix: Water

Date Received: 04/02/13 01:40

Method: 8260B SIM - Volatile Organic Compounds (GC/MS)

Analyte	Result	Qualifier	RL	MDL	Unit	D	Prepared	Analyzed	Dil Fac
1,4-Dioxane	**2.0**		1.6		ug/L			04/03/13 18:20	1

Surrogate	*%Recovery*	*Qualifier*	*Limits*	*Prepared*	*Analyzed*	*Dil Fac*
Dibromofluoromethane (Surr)	*105*		*50 - 150*		*04/03/13 18:20*	*1*
TBA-d9 (Surr)	*142*		*50 - 150*		*04/03/13 18:20*	*1*

Method: 8260C - Volatile Organic Compounds (GC/MS)

Analyte	Result	Qualifier	RL	MDL	Unit	D	Prepared	Analyzed	Dil Fac
1,1,1,2-Tetrachloroethane	ND		1.0		ug/L			04/04/13 18:10	1
1,1,1-Trichloroethane	ND		1.0		ug/L			04/04/13 18:10	1
1,1,2,2-Tetrachloroethane	ND		0.50		ug/L			04/04/13 18:10	1
1,1,2-Trichloroethane	ND		1.0		ug/L			04/04/13 18:10	1
1,1-Dichloroethane	ND		1.0		ug/L			04/04/13 18:10	1
1,1-Dichloroethene	ND		1.0		ug/L			04/04/13 18:10	1
1,1-Dichloropropene	ND		1.0		ug/L			04/04/13 18:10	1
1,2,3-Trichlorobenzene	ND		1.0		ug/L			04/04/13 18:10	1
1,2,3-Trichloropropane	ND		1.0		ug/L			04/04/13 18:10	1
1,2,4-Trichlorobenzene	ND		1.0		ug/L			04/04/13 18:10	1
1,2,4-Trimethylbenzene	ND		1.0		ug/L			04/04/13 18:10	1
1,2-Dibromo-3-Chloropropane	ND		5.0		ug/L			04/04/13 18:10	1
1,2-Dichlorobenzene	ND		1.0		ug/L			04/04/13 18:10	1
1,2-Dichloroethane	ND		1.0		ug/L			04/04/13 18:10	1
1,2-Dichloropropane	ND		1.0		ug/L			04/04/13 18:10	1
1,3,5-Trimethylbenzene	ND		1.0		ug/L			04/04/13 18:10	1
1,3-Dichlorobenzene	ND		1.0		ug/L			04/04/13 18:10	1

Client Sample ID: MW-269Ma-2013 0329-01

Lab Sample ID: 480-35387-15

Date Collected: 03/29/13 12:03

Matrix: Water

Date Received: 04/02/13 01:40

Method: 8260C - Volatile Organic Compounds (GC/MS) (Continued)

Analyte	Result	Qualifier	RL	MDL	Unit	D	Prepared	Analyzed	Dil Fac
1,3-Dichloropropane	ND		1.0		ug/L			04/04/13 18:10	1
1,4-Dichlorobenzene	ND		1.0		ug/L			04/04/13 18:10	1
1,4-Dioxane	ND		50		ug/L			04/04/13 18:10	1
2,2-Dichloropropane	ND		1.0		ug/L			04/04/13 18:10	1
2-Butanone (MEK)	ND		10		ug/L			04/04/13 18:10	1
2-Chlorotoluene	ND		1.0		ug/L			04/04/13 18:10	1
2-Hexanone	ND		10		ug/L			04/04/13 18:10	1
4-Chlorotoluene	ND		1.0		ug/L			04/04/13 18:10	1
4-Isopropyltoluene	ND		1.0		ug/L			04/04/13 18:10	1
4-Methyl-2-pentanone (MIBK)	ND		10		ug/L			04/04/13 18:10	1
Acetone	ND		50		ug/L			04/04/13 18:10	1
Benzene	ND		1.0		ug/L			04/04/13 18:10	1
Bromobenzene	ND		1.0		ug/L			04/04/13 18:10	1
Bromoform	ND		1.0		ug/L			04/04/13 18:10	1
Bromomethane	ND		2.0		ug/L			04/04/13 18:10	1
Carbon disulfide	ND		10		ug/L			04/04/13 18:10	1
Carbon tetrachloride	ND		1.0		ug/L			04/04/13 18:10	1
Chlorobenzene	ND		1.0		ug/L			04/04/13 18:10	1
Chlorobromomethane	ND		1.0		ug/L			04/04/13 18:10	1
Chlorodibromomethane	ND		0.50		ug/L			04/04/13 18:10	1
Chloroethane	ND		2.0		ug/L			04/04/13 18:10	1
Chloroform	ND		1.0		ug/L			04/04/13 18:10	1
Chloromethane	ND		2.0		ug/L			04/04/13 18:10	1
cis-1,2-Dichloroethene	**2.2**		1.0		ug/L			04/04/13 18:10	1
cis-1,3-Dichloropropene	ND		0.40		ug/L			04/04/13 18:10	1
Dichlorobromomethane	ND		0.50		ug/L			04/04/13 18:10	1
Dichlorodifluoromethane	ND		1.0		ug/L			04/04/13 18:10	1
Ethyl ether	ND		1.0		ug/L			04/04/13 18:10	1
Ethylbenzene	ND		1.0		ug/L			04/04/13 18:10	1
Ethylene Dibromide	ND		1.0		ug/L			04/04/13 18:10	1
Hexachlorobutadiene	ND		0.40		ug/L			04/04/13 18:10	1
Isopropyl ether	ND		10		ug/L			04/04/13 18:10	1
Isopropylbenzene	ND		1.0		ug/L			04/04/13 18:10	1
Methyl tert-butyl ether	ND		1.0		ug/L			04/04/13 18:10	1
Methylene Chloride	ND		1.0		ug/L			04/04/13 18:10	1
m-Xylene & p-Xylene	ND		2.0		ug/L			04/04/13 18:10	1
Naphthalene	ND		5.0		ug/L			04/04/13 18:10	1
n-Butylbenzene	ND		1.0		ug/L			04/04/13 18:10	1
N-Propylbenzene	ND		1.0		ug/L			04/04/13 18:10	1
o-Xylene	ND		1.0		ug/L			04/04/13 18:10	1
sec-Butylbenzene	ND		1.0		ug/L			04/04/13 18:10	1
Styrene	ND		1.0		ug/L			04/04/13 18:10	1
Tert-amyl methyl ether	ND		5.0		ug/L			04/04/13 18:10	1
Tert-butyl ethyl ether	ND		5.0		ug/L			04/04/13 18:10	1
tert-Butylbenzene	ND		1.0		ug/L			04/04/13 18:10	1
Tetrachloroethene	ND		1.0		ug/L			04/04/13 18:10	1
Tetrahydrofuran	ND		10		ug/L			04/04/13 18:10	1
Toluene	ND		1.0		ug/L			04/04/13 18:10	1
trans-1,2-Dichloroethene	ND		1.0		ug/L			04/04/13 18:10	1

Client Sample ID: MW-269Ma-2013 0329-01

Lab Sample ID: 480-35387-15

Date Collected: 03/29/13 12:03

Matrix: Water

Date Received: 04/02/13 01:40

Method: 8260C - Volatile Organic Compounds (GC/MS) (Continued)

Analyte	Result	Qualifier	RL	MDL	Unit	D	Prepared	Analyzed	Dil Fac
trans-1,3-Dichloropropene	ND		0.40		ug/L			04/04/13 18:10	1
Trichloroethene	**1.0**		1.0		ug/L			04/04/13 18:10	1
Trichlorofluoromethane	ND		1.0		ug/L			04/04/13 18:10	1
Vinyl chloride	ND		1.0		ug/L			04/04/13 18:10	1
Dibromomethane	ND		1.0		ug/L			04/04/13 18:10	1

Surrogate	*%Recovery*	*Qualifier*	*Limits*	*Prepared*	*Analyzed*	*Dil Fac*
Toluene-d8 (Surr)	*97*		*70 - 130*		*04/04/13 18:10*	*1*
1,2-Dichloroethane-d4 (Surr)	*88*		*70 - 130*		*04/04/13 18:10*	*1*
4-Bromofluorobenzene (Surr)	*102*		*70 - 130*		*04/04/13 18:10*	*1*

Client Sample ID: MW-551-2013 0329-01

Lab Sample ID: 480-35387-16

Date Collected: 03/29/13 13:25

Matrix: Water

Date Received: 04/02/13 01:40

Method: 8260C - Volatile Organic Compounds (GC/MS)

Analyte	Result	Qualifier	RL	MDL	Unit	D	Prepared	Analyzed	Dil Fac
1,1,1,2-Tetrachloroethane	ND		100		ug/L			04/04/13 18:34	100
1,1,1-Trichloroethane	ND		100		ug/L			04/04/13 18:34	100
1,1,2,2-Tetrachloroethane	ND		50		ug/L			04/04/13 18:34	100
1,1,2-Trichloroethane	ND		100		ug/L			04/04/13 18:34	100
1,1-Dichloroethane	ND		100		ug/L			04/04/13 18:34	100
1,1-Dichloroethene	ND		100		ug/L			04/04/13 18:34	100
1,1-Dichloropropene	ND		100		ug/L			04/04/13 18:34	100
1,2,3-Trichlorobenzene	ND		100		ug/L			04/04/13 18:34	100
1,2,3-Trichloropropane	ND		100		ug/L			04/04/13 18:34	100
1,2,4-Trichlorobenzene	ND		100		ug/L			04/04/13 18:34	100
1,2,4-Trimethylbenzene	ND		100		ug/L			04/04/13 18:34	100
1,2-Dibromo-3-Chloropropane	ND		500		ug/L			04/04/13 18:34	100
1,2-Dichlorobenzene	ND		100		ug/L			04/04/13 18:34	100
1,2-Dichloroethane	ND		100		ug/L			04/04/13 18:34	100
1,2-Dichloropropane	ND		100		ug/L			04/04/13 18:34	100
1,3,5-Trimethylbenzene	ND		100		ug/L			04/04/13 18:34	100
1,3-Dichlorobenzene	ND		100		ug/L			04/04/13 18:34	100
1,3-Dichloropropane	ND		100		ug/L			04/04/13 18:34	100
1,4-Dichlorobenzene	ND		100		ug/L			04/04/13 18:34	100
1,4-Dioxane	ND		5000		ug/L			04/04/13 18:34	100
2,2-Dichloropropane	ND		100		ug/L			04/04/13 18:34	100
2-Butanone (MEK)	ND		1000		ug/L			04/04/13 18:34	100
2-Chlorotoluene	ND		100		ug/L			04/04/13 18:34	100
2-Hexanone	ND		1000		ug/L			04/04/13 18:34	100
4-Chlorotoluene	ND		100		ug/L			04/04/13 18:34	100
4-Isopropyltoluene	ND		100		ug/L			04/04/13 18:34	100
4-Methyl-2-pentanone (MIBK)	ND		1000		ug/L			04/04/13 18:34	100
Benzene	ND		100		ug/L			04/04/13 18:34	100
Bromobenzene	ND		100		ug/L			04/04/13 18:34	100
Bromoform	ND		100		ug/L			04/04/13 18:34	100
Bromomethane	ND		200		ug/L			04/04/13 18:34	100
Carbon disulfide	ND		1000		ug/L			04/04/13 18:34	100
Carbon tetrachloride	ND		100		ug/L			04/04/13 18:34	100

Client Sample ID: MW-551-2013 0329-01
Date Collected: 03/29/13 13:25
Date Received: 04/02/13 01:40

Lab Sample ID: 480-35387-16
Matrix: Water

Method: 8260C - Volatile Organic Compounds (GC/MS) (Continued)

Analyte	Result	Qualifier	RL	MDL	Unit	D	Prepared	Analyzed	Dil Fac
Chlorobenzene	ND		100		ug/L			04/04/13 18:34	100
Chlorobromomethane	ND		100		ug/L			04/04/13 18:34	100
Chlorodibromomethane	ND		50		ug/L			04/04/13 18:34	100
Chloroethane	ND		200		ug/L			04/04/13 18:34	100
Chloroform	ND		100		ug/L			04/04/13 18:34	100
Chloromethane	ND		200		ug/L			04/04/13 18:34	100
cis-1,2-Dichloroethene	**240**		100		ug/L			04/04/13 18:34	100
cis-1,3-Dichloropropene	ND		40		ug/L			04/04/13 18:34	100
Dichlorobromomethane	ND		50		ug/L			04/04/13 18:34	100
Dichlorodifluoromethane	ND		100		ug/L			04/04/13 18:34	100
Ethyl ether	ND		100		ug/L			04/04/13 18:34	100
Ethylbenzene	ND		100		ug/L			04/04/13 18:34	100
Ethylene Dibromide	ND		100		ug/L			04/04/13 18:34	100
Hexachlorobutadiene	ND		40		ug/L			04/04/13 18:34	100
Isopropyl ether	ND		1000		ug/L			04/04/13 18:34	100
Isopropylbenzene	ND		100		ug/L			04/04/13 18:34	100
Methyl tert-butyl ether	ND		100		ug/L			04/04/13 18:34	100
Methylene Chloride	ND		100		ug/L			04/04/13 18:34	100
m-Xylene & p-Xylene	ND		200		ug/L			04/04/13 18:34	100
Naphthalene	ND		500		ug/L			04/04/13 18:34	100
n-Butylbenzene	ND		100		ug/L			04/04/13 18:34	100
N-Propylbenzene	ND		100		ug/L			04/04/13 18:34	100
o-Xylene	ND		100		ug/L			04/04/13 18:34	100
sec-Butylbenzene	ND		100		ug/L			04/04/13 18:34	100
Styrene	ND		100		ug/L			04/04/13 18:34	100
Tert-amyl methyl ether	ND		500		ug/L			04/04/13 18:34	100
Tert-butyl ethyl ether	ND		500		ug/L			04/04/13 18:34	100
tert-Butylbenzene	ND		100		ug/L			04/04/13 18:34	100
Tetrachloroethene	ND		100		ug/L			04/04/13 18:34	100
Tetrahydrofuran	ND		1000		ug/L			04/04/13 18:34	100
Toluene	ND		100		ug/L			04/04/13 18:34	100
trans-1,2-Dichloroethene	ND		100		ug/L			04/04/13 18:34	100
trans-1,3-Dichloropropene	ND		40		ug/L			04/04/13 18:34	100
Trichloroethene	ND		100		ug/L			04/04/13 18:34	100
Trichlorofluoromethane	ND		100		ug/L			04/04/13 18:34	100
Vinyl chloride	**130**		100		ug/L			04/04/13 18:34	100
Dibromomethane	ND		100		ug/L			04/04/13 18:34	100

Surrogate	*%Recovery*	*Qualifier*	*Limits*	*Prepared*	*Analyzed*	*Dil Fac*
Toluene-d8 (Surr)	*94*		*70 - 130*		*04/04/13 18:34*	*100*
1,2-Dichloroethane-d4 (Surr)	*88*		*70 - 130*		*04/04/13 18:34*	*100*
4-Bromofluorobenzene (Surr)	*101*		*70 - 130*		*04/04/13 18:34*	*100*

Method: 8260C - Volatile Organic Compounds (GC/MS) - DL

Analyte	Result	Qualifier	RL	MDL	Unit	D	Prepared	Analyzed	Dil Fac
Acetone	**130000**		20000		ug/L			04/05/13 02:56	400

Surrogate	*%Recovery*	*Qualifier*	*Limits*	*Prepared*	*Analyzed*	*Dil Fac*
Toluene-d8 (Surr)	*95*		*70 - 130*		*04/05/13 02:56*	*400*
1,2-Dichloroethane-d4 (Surr)	*89*		*70 - 130*		*04/05/13 02:56*	*400*

Client Sample ID: MW-551-2013 0329-01

Lab Sample ID: 480-35387-16

Date Collected: 03/29/13 13:25
Matrix: Water
Date Received: 04/02/13 01:40

Method: 8260C - Volatile Organic Compounds (GC/MS) - DL (Continued)

Surrogate	*%Recovery*	*Qualifier*	*Limits*	*Prepared*	*Analyzed*	*Dil Fac*
4-Bromofluorobenzene (Surr)	*101*		*70 - 130*		*04/05/13 02:56*	*400*

Client Sample ID: MW-552-2013 0329-01

Lab Sample ID: 480-35387-17

Date Collected: 03/29/13 09:35
Matrix: Water
Date Received: 04/02/13 01:40

Method: 8260B SIM - Volatile Organic Compounds (GC/MS)

Analyte	Result	Qualifier	RL	MDL	Unit	D	Prepared	Analyzed	Dil Fac
1,4-Dioxane	**3.7**		3.2		ug/L			04/03/13 18:44	2

Surrogate	*%Recovery*	*Qualifier*	*Limits*	*Prepared*	*Analyzed*	*Dil Fac*
Dibromofluoromethane (Surr)	*104*		*50 - 150*		*04/03/13 18:44*	*2*
TBA-d9 (Surr)	*152*	*X*	*50 - 150*		*04/03/13 18:44*	*2*

Method: 8260C - Volatile Organic Compounds (GC/MS)

Analyte	Result	Qualifier	RL	MDL	Unit	D	Prepared	Analyzed	Dil Fac
1,1,1,2-Tetrachloroethane	ND		8.0		ug/L			04/05/13 03:20	8
1,1,1-Trichloroethane	ND		8.0		ug/L			04/05/13 03:20	8
1,1,2,2-Tetrachloroethane	ND		4.0		ug/L			04/05/13 03:20	8
1,1,2-Trichloroethane	ND		8.0		ug/L			04/05/13 03:20	8
1,1-Dichloroethane	ND		8.0		ug/L			04/05/13 03:20	8
1,1-Dichloroethene	ND		8.0		ug/L			04/05/13 03:20	8
1,1-Dichloropropene	ND		8.0		ug/L			04/05/13 03:20	8
1,2,3-Trichlorobenzene	ND		8.0		ug/L			04/05/13 03:20	8
1,2,3-Trichloropropane	ND		8.0		ug/L			04/05/13 03:20	8
1,2,4-Trichlorobenzene	ND		8.0		ug/L			04/05/13 03:20	8
1,2,4-Trimethylbenzene	ND		8.0		ug/L			04/05/13 03:20	8
1,2-Dibromo-3-Chloropropane	ND		40		ug/L			04/05/13 03:20	8
1,2-Dichlorobenzene	ND		8.0		ug/L			04/05/13 03:20	8
1,2-Dichloroethane	ND		8.0		ug/L			04/05/13 03:20	8
1,2-Dichloropropane	ND		8.0		ug/L			04/05/13 03:20	8
1,3,5-Trimethylbenzene	ND		8.0		ug/L			04/05/13 03:20	8
1,3-Dichlorobenzene	ND		8.0		ug/L			04/05/13 03:20	8
1,3-Dichloropropane	ND		8.0		ug/L			04/05/13 03:20	8
1,4-Dichlorobenzene	ND		8.0		ug/L			04/05/13 03:20	8
1,4-Dioxane	ND		400		ug/L			04/05/13 03:20	8
2,2-Dichloropropane	ND		8.0		ug/L			04/05/13 03:20	8
2-Butanone (MEK)	ND		80		ug/L			04/05/13 03:20	8
2-Chlorotoluene	ND		8.0		ug/L			04/05/13 03:20	8
2-Hexanone	ND		80		ug/L			04/05/13 03:20	8
4-Chlorotoluene	ND		8.0		ug/L			04/05/13 03:20	8
4-Isopropyltoluene	ND		8.0		ug/L			04/05/13 03:20	8
4-Methyl-2-pentanone (MIBK)	ND		80		ug/L			04/05/13 03:20	8
Acetone	**2900**		400		ug/L			04/05/13 03:20	8
Benzene	ND		8.0		ug/L			04/05/13 03:20	8
Bromobenzene	ND		8.0		ug/L			04/05/13 03:20	8
Bromoform	ND		8.0		ug/L			04/05/13 03:20	8
Bromomethane	ND		16		ug/L			04/05/13 03:20	8
Carbon disulfide	ND		80		ug/L			04/05/13 03:20	8
Carbon tetrachloride	ND		8.0		ug/L			04/05/13 03:20	8

Client Sample ID: MW-552-2013 0329-01

Lab Sample ID: 480-35387-17

Date Collected: 03/29/13 09:35

Matrix: Water

Date Received: 04/02/13 01:40

Method: 8260C - Volatile Organic Compounds (GC/MS) (Continued)

Analyte	Result	Qualifier	RL	MDL	Unit	D	Prepared	Analyzed	Dil Fac
Chlorobenzene	ND		8.0		ug/L			04/05/13 03:20	8
Chlorobromomethane	ND		8.0		ug/L			04/05/13 03:20	8
Chlorodibromomethane	ND		4.0		ug/L			04/05/13 03:20	8
Chloroethane	ND	*	16		ug/L			04/05/13 03:20	8
Chloroform	ND		8.0		ug/L			04/05/13 03:20	8
Chloromethane	ND		16		ug/L			04/05/13 03:20	8
cis-1,2-Dichloroethene	**320**		8.0		ug/L			04/05/13 03:20	8
cis-1,3-Dichloropropene	ND		3.2		ug/L			04/05/13 03:20	8
Dichlorobromomethane	ND		4.0		ug/L			04/05/13 03:20	8
Dichlorodifluoromethane	ND		8.0		ug/L			04/05/13 03:20	8
Ethyl ether	ND		8.0		ug/L			04/05/13 03:20	8
Ethylbenzene	ND		8.0		ug/L			04/05/13 03:20	8
Ethylene Dibromide	ND		8.0		ug/L			04/05/13 03:20	8
Hexachlorobutadiene	ND		3.2		ug/L			04/05/13 03:20	8
Isopropyl ether	ND		80		ug/L			04/05/13 03:20	8
Isopropylbenzene	ND		8.0		ug/L			04/05/13 03:20	8
Methyl tert-butyl ether	ND		8.0		ug/L			04/05/13 03:20	8
Methylene Chloride	ND		8.0		ug/L			04/05/13 03:20	8
m-Xylene & p-Xylene	ND		16		ug/L			04/05/13 03:20	8
Naphthalene	ND		40		ug/L			04/05/13 03:20	8
n-Butylbenzene	ND		8.0		ug/L			04/05/13 03:20	8
N-Propylbenzene	ND		8.0		ug/L			04/05/13 03:20	8
o-Xylene	ND		8.0		ug/L			04/05/13 03:20	8
sec-Butylbenzene	ND		8.0		ug/L			04/05/13 03:20	8
Styrene	ND		8.0		ug/L			04/05/13 03:20	8
Tert-amyl methyl ether	ND		40		ug/L			04/05/13 03:20	8
Tert-butyl ethyl ether	ND		40		ug/L			04/05/13 03:20	8
tert-Butylbenzene	ND		8.0		ug/L			04/05/13 03:20	8
Tetrachloroethene	ND		8.0		ug/L			04/05/13 03:20	8
Tetrahydrofuran	ND		80		ug/L			04/05/13 03:20	8
Toluene	ND		8.0		ug/L			04/05/13 03:20	8
trans-1,2-Dichloroethene	ND		8.0		ug/L			04/05/13 03:20	8
trans-1,3-Dichloropropene	ND		3.2		ug/L			04/05/13 03:20	8
Trichloroethene	**39**		8.0		ug/L			04/05/13 03:20	8
Trichlorofluoromethane	ND		8.0		ug/L			04/05/13 03:20	8
Vinyl chloride	**260**		8.0		ug/L			04/05/13 03:20	8
Dibromomethane	ND		8.0		ug/L			04/05/13 03:20	8

Surrogate	*%Recovery*	*Qualifier*	*Limits*	*Prepared*	*Analyzed*	*Dil Fac*
Toluene-d8 (Surr)	*98*		*70 - 130*		*04/05/13 03:20*	*8*
1,2-Dichloroethane-d4 (Surr)	*87*		*70 - 130*		*04/05/13 03:20*	*8*
4-Bromofluorobenzene (Surr)	*103*		*70 - 130*		*04/05/13 03:20*	*8*

Client Sample ID: MW-553-2013 0329-01

Lab Sample ID: 480-35387-18

Date Collected: 03/29/13 10:40

Matrix: Water

Date Received: 04/02/13 01:40

Method: 8260C - Volatile Organic Compounds (GC/MS)

Analyte	Result	Qualifier	RL	MDL	Unit	D	Prepared	Analyzed	Dil Fac
1,1,1,2-Tetrachloroethane	ND		200		ug/L			04/04/13 19:21	200

Client Sample ID: MW-553-2013 0329-01
Date Collected: 03/29/13 10:40
Date Received: 04/02/13 01:40

Lab Sample ID: 480-35387-18
Matrix: Water

Method: 8260C - Volatile Organic Compounds (GC/MS) (Continued)

Analyte	Result	Qualifier	RL	MDL	Unit	D	Prepared	Analyzed	Dil Fac
1,1,1-Trichloroethane	ND		200		ug/L			04/04/13 19:21	200
1,1,2,2-Tetrachloroethane	ND		100		ug/L			04/04/13 19:21	200
1,1,2-Trichloroethane	ND		200		ug/L			04/04/13 19:21	200
1,1-Dichloroethane	ND		200		ug/L			04/04/13 19:21	200
1,1-Dichloroethene	ND		200		ug/L			04/04/13 19:21	200
1,1-Dichloropropene	ND		200		ug/L			04/04/13 19:21	200
1,2,3-Trichlorobenzene	ND		200		ug/L			04/04/13 19:21	200
1,2,3-Trichloropropane	ND		200		ug/L			04/04/13 19:21	200
1,2,4-Trichlorobenzene	ND		200		ug/L			04/04/13 19:21	200
1,2,4-Trimethylbenzene	ND		200		ug/L			04/04/13 19:21	200
1,2-Dibromo-3-Chloropropane	ND		1000		ug/L			04/04/13 19:21	200
1,2-Dichlorobenzene	ND		200		ug/L			04/04/13 19:21	200
1,2-Dichloroethane	ND		200		ug/L			04/04/13 19:21	200
1,2-Dichloropropane	ND		200		ug/L			04/04/13 19:21	200
1,3,5-Trimethylbenzene	ND		200		ug/L			04/04/13 19:21	200
1,3-Dichlorobenzene	ND		200		ug/L			04/04/13 19:21	200
1,3-Dichloropropane	ND		200		ug/L			04/04/13 19:21	200
1,4-Dichlorobenzene	ND		200		ug/L			04/04/13 19:21	200
1,4-Dioxane	ND		10000		ug/L			04/04/13 19:21	200
2,2-Dichloropropane	ND		200		ug/L			04/04/13 19:21	200
2-Butanone (MEK)	ND		2000		ug/L			04/04/13 19:21	200
2-Chlorotoluene	ND		200		ug/L			04/04/13 19:21	200
2-Hexanone	ND		2000		ug/L			04/04/13 19:21	200
4-Chlorotoluene	ND		200		ug/L			04/04/13 19:21	200
4-Isopropyltoluene	ND		200		ug/L			04/04/13 19:21	200
4-Methyl-2-pentanone (MIBK)	ND		2000		ug/L			04/04/13 19:21	200
Benzene	ND		200		ug/L			04/04/13 19:21	200
Bromobenzene	ND		200		ug/L			04/04/13 19:21	200
Bromoform	ND		200		ug/L			04/04/13 19:21	200
Bromomethane	ND		400		ug/L			04/04/13 19:21	200
Carbon disulfide	ND		2000		ug/L			04/04/13 19:21	200
Carbon tetrachloride	ND		200		ug/L			04/04/13 19:21	200
Chlorobenzene	ND		200		ug/L			04/04/13 19:21	200
Chlorobromomethane	ND		200		ug/L			04/04/13 19:21	200
Chlorodibromomethane	ND		100		ug/L			04/04/13 19:21	200
Chloroethane	ND		400		ug/L			04/04/13 19:21	200
Chloroform	ND		200		ug/L			04/04/13 19:21	200
Chloromethane	ND		400		ug/L			04/04/13 19:21	200
cis-1,2-Dichloroethene	ND		200		ug/L			04/04/13 19:21	200
cis-1,3-Dichloropropene	ND		80		ug/L			04/04/13 19:21	200
Dichlorobromomethane	ND		100		ug/L			04/04/13 19:21	200
Dichlorodifluoromethane	ND		200		ug/L			04/04/13 19:21	200
Ethyl ether	ND		200		ug/L			04/04/13 19:21	200
Ethylbenzene	ND		200		ug/L			04/04/13 19:21	200
Ethylene Dibromide	ND		200		ug/L			04/04/13 19:21	200
Hexachlorobutadiene	ND		80		ug/L			04/04/13 19:21	200
Isopropyl ether	ND		2000		ug/L			04/04/13 19:21	200
Isopropylbenzene	ND		200		ug/L			04/04/13 19:21	200
Methyl tert-butyl ether	ND		200		ug/L			04/04/13 19:21	200

Client Sample ID: MW-553-2013 0329-01

Lab Sample ID: 480-35387-18

Date Collected: 03/29/13 10:40

Matrix: Water

Date Received: 04/02/13 01:40

Method: 8260C - Volatile Organic Compounds (GC/MS) (Continued)

Analyte	Result	Qualifier	RL	MDL	Unit	D	Prepared	Analyzed	Dil Fac
Methylene Chloride	ND		200		ug/L			04/04/13 19:21	200
m-Xylene & p-Xylene	ND		400		ug/L			04/04/13 19:21	200
Naphthalene	ND		1000		ug/L			04/04/13 19:21	200
n-Butylbenzene	ND		200		ug/L			04/04/13 19:21	200
N-Propylbenzene	ND		200		ug/L			04/04/13 19:21	200
o-Xylene	ND		200		ug/L			04/04/13 19:21	200
sec-Butylbenzene	ND		200		ug/L			04/04/13 19:21	200
Styrene	ND		200		ug/L			04/04/13 19:21	200
Tert-amyl methyl ether	ND		1000		ug/L			04/04/13 19:21	200
Tert-butyl ethyl ether	ND		1000		ug/L			04/04/13 19:21	200
tert-Butylbenzene	ND		200		ug/L			04/04/13 19:21	200
Tetrachloroethene	ND		200		ug/L			04/04/13 19:21	200
Tetrahydrofuran	ND		2000		ug/L			04/04/13 19:21	200
Toluene	ND		200		ug/L			04/04/13 19:21	200
trans-1,2-Dichloroethene	ND		200		ug/L			04/04/13 19:21	200
trans-1,3-Dichloropropene	ND		80		ug/L			04/04/13 19:21	200
Trichloroethene	ND		200		ug/L			04/04/13 19:21	200
Trichlorofluoromethane	ND		200		ug/L			04/04/13 19:21	200
Vinyl chloride	ND		200		ug/L			04/04/13 19:21	200
Dibromomethane	ND		200		ug/L			04/04/13 19:21	200

Surrogate	*%Recovery*	*Qualifier*	*Limits*	*Prepared*	*Analyzed*	*Dil Fac*
Toluene-d8 (Surr)	*96*		*70 - 130*		*04/04/13 19:21*	*200*
1,2-Dichloroethane-d4 (Surr)	*88*		*70 - 130*		*04/04/13 19:21*	*200*
4-Bromofluorobenzene (Surr)	*103*		*70 - 130*		*04/04/13 19:21*	*200*

Method: 8260C - Volatile Organic Compounds (GC/MS) - DL

Analyte	Result	Qualifier	RL	MDL	Unit	D	Prepared	Analyzed	Dil Fac
Acetone	**130000**		20000		ug/L			04/05/13 03:43	400

Surrogate	*%Recovery*	*Qualifier*	*Limits*	*Prepared*	*Analyzed*	*Dil Fac*
Toluene-d8 (Surr)	*96*		*70 - 130*		*04/05/13 03:43*	*400*
1,2-Dichloroethane-d4 (Surr)	*88*		*70 - 130*		*04/05/13 03:43*	*400*
4-Bromofluorobenzene (Surr)	*101*		*70 - 130*		*04/05/13 03:43*	*400*

Client Sample ID: MW-560-2013 0329-01

Lab Sample ID: 480-35387-19

Date Collected: 03/29/13 10:35

Matrix: Water

Date Received: 04/02/13 01:40

Method: 8260C - Volatile Organic Compounds (GC/MS)

Analyte	Result	Qualifier	RL	MDL	Unit	D	Prepared	Analyzed	Dil Fac
1,1,1,2-Tetrachloroethane	ND		1.0		ug/L			04/04/13 19:45	1
1,1,1-Trichloroethane	ND		1.0		ug/L			04/04/13 19:45	1
1,1,2,2-Tetrachloroethane	ND		0.50		ug/L			04/04/13 19:45	1
1,1,2-Trichloroethane	ND		1.0		ug/L			04/04/13 19:45	1
1,1-Dichloroethane	ND		1.0		ug/L			04/04/13 19:45	1
1,1-Dichloroethene	ND		1.0		ug/L			04/04/13 19:45	1
1,1-Dichloropropene	ND		1.0		ug/L			04/04/13 19:45	1
1,2,3-Trichlorobenzene	ND		1.0		ug/L			04/04/13 19:45	1
1,2,3-Trichloropropane	ND		1.0		ug/L			04/04/13 19:45	1

Client Sample ID: MW-560-2013 0329-01
Date Collected: 03/29/13 10:35
Date Received: 04/02/13 01:40

Lab Sample ID: 480-35387-19
Matrix: Water

Method: 8260C - Volatile Organic Compounds (GC/MS) (Continued)

Analyte	Result	Qualifier	RL	MDL	Unit	D	Prepared	Analyzed	Dil Fac
1,2,4-Trichlorobenzene	ND		1.0		ug/L			04/04/13 19:45	1
1,2,4-Trimethylbenzene	ND		1.0		ug/L			04/04/13 19:45	1
1,2-Dibromo-3-Chloropropane	ND		5.0		ug/L			04/04/13 19:45	1
1,2-Dichlorobenzene	ND		1.0		ug/L			04/04/13 19:45	1
1,2-Dichloroethane	ND		1.0		ug/L			04/04/13 19:45	1
1,2-Dichloropropane	ND		1.0		ug/L			04/04/13 19:45	1
1,3,5-Trimethylbenzene	ND		1.0		ug/L			04/04/13 19:45	1
1,3-Dichlorobenzene	ND		1.0		ug/L			04/04/13 19:45	1
1,3-Dichloropropane	ND		1.0		ug/L			04/04/13 19:45	1
1,4-Dichlorobenzene	ND		1.0		ug/L			04/04/13 19:45	1
1,4-Dioxane	ND		50		ug/L			04/04/13 19:45	1
2,2-Dichloropropane	ND		1.0		ug/L			04/04/13 19:45	1
2-Butanone (MEK)	ND		10		ug/L			04/04/13 19:45	1
2-Chlorotoluene	ND		1.0		ug/L			04/04/13 19:45	1
2-Hexanone	ND		10		ug/L			04/04/13 19:45	1
4-Chlorotoluene	ND		1.0		ug/L			04/04/13 19:45	1
4-Isopropyltoluene	ND		1.0		ug/L			04/04/13 19:45	1
4-Methyl-2-pentanone (MIBK)	ND		10		ug/L			04/04/13 19:45	1
Acetone	ND		50		ug/L			04/04/13 19:45	1
Benzene	ND		1.0		ug/L			04/04/13 19:45	1
Bromobenzene	ND		1.0		ug/L			04/04/13 19:45	1
Bromoform	ND		1.0		ug/L			04/04/13 19:45	1
Bromomethane	ND		2.0		ug/L			04/04/13 19:45	1
Carbon disulfide	ND		10		ug/L			04/04/13 19:45	1
Carbon tetrachloride	ND		1.0		ug/L			04/04/13 19:45	1
Chlorobenzene	ND		1.0		ug/L			04/04/13 19:45	1
Chlorobromomethane	ND		1.0		ug/L			04/04/13 19:45	1
Chlorodibromomethane	ND		0.50		ug/L			04/04/13 19:45	1
Chloroethane	ND		2.0		ug/L			04/04/13 19:45	1
Chloroform	ND		1.0		ug/L			04/04/13 19:45	1
Chloromethane	ND		2.0		ug/L			04/04/13 19:45	1
cis-1,2-Dichloroethene	**16**		1.0		ug/L			04/04/13 19:45	1
cis-1,3-Dichloropropene	ND		0.40		ug/L			04/04/13 19:45	1
Dichlorobromomethane	ND		0.50		ug/L			04/04/13 19:45	1
Dichlorodifluoromethane	ND		1.0		ug/L			04/04/13 19:45	1
Ethyl ether	ND		1.0		ug/L			04/04/13 19:45	1
Ethylbenzene	ND		1.0		ug/L			04/04/13 19:45	1
Ethylene Dibromide	ND		1.0		ug/L			04/04/13 19:45	1
Hexachlorobutadiene	ND		0.40		ug/L			04/04/13 19:45	1
Isopropyl ether	ND		10		ug/L			04/04/13 19:45	1
Isopropylbenzene	ND		1.0		ug/L			04/04/13 19:45	1
Methyl tert-butyl ether	ND		1.0		ug/L			04/04/13 19:45	1
Methylene Chloride	ND		1.0		ug/L			04/04/13 19:45	1
m-Xylene & p-Xylene	ND		2.0		ug/L			04/04/13 19:45	1
Naphthalene	ND		5.0		ug/L			04/04/13 19:45	1
n-Butylbenzene	ND		1.0		ug/L			04/04/13 19:45	1
N-Propylbenzene	ND		1.0		ug/L			04/04/13 19:45	1
o-Xylene	ND		1.0		ug/L			04/04/13 19:45	1
sec-Butylbenzene	ND		1.0		ug/L			04/04/13 19:45	1

Client Sample ID: MW-560-2013 0329-01

Lab Sample ID: 480-35387-19

Date Collected: 03/29/13 10:35

Matrix: Water

Date Received: 04/02/13 01:40

Method: 8260C - Volatile Organic Compounds (GC/MS) (Continued)

Analyte	Result	Qualifier	RL	MDL	Unit	D	Prepared	Analyzed	Dil Fac
Styrene	ND		1.0		ug/L			04/04/13 19:45	1
Tert-amyl methyl ether	ND		5.0		ug/L			04/04/13 19:45	1
Tert-butyl ethyl ether	ND		5.0		ug/L			04/04/13 19:45	1
tert-Butylbenzene	ND		1.0		ug/L			04/04/13 19:45	1
Tetrachloroethene	ND		1.0		ug/L			04/04/13 19:45	1
Tetrahydrofuran	ND		10		ug/L			04/04/13 19:45	1
Toluene	ND		1.0		ug/L			04/04/13 19:45	1
trans-1,2-Dichloroethene	ND		1.0		ug/L			04/04/13 19:45	1
trans-1,3-Dichloropropene	ND		0.40		ug/L			04/04/13 19:45	1
Trichloroethene	**3.3**		1.0		ug/L			04/04/13 19:45	1
Trichlorofluoromethane	ND		1.0		ug/L			04/04/13 19:45	1
Vinyl chloride	**1.4**		1.0		ug/L			04/04/13 19:45	1
Dibromomethane	ND		1.0		ug/L			04/04/13 19:45	1

Surrogate	*%Recovery*	*Qualifier*	*Limits*	*Prepared*	*Analyzed*	*Dil Fac*
Toluene-d8 (Surr)	*95*		*70 - 130*		*04/04/13 19:45*	*1*
1,2-Dichloroethane-d4 (Surr)	*90*		*70 - 130*		*04/04/13 19:45*	*1*
4-Bromofluorobenzene (Surr)	*103*		*70 - 130*		*04/04/13 19:45*	*1*

Client Sample ID: MW-561-2013 0329-01

Lab Sample ID: 480-35387-20

Date Collected: 03/29/13 10:15

Matrix: Water

Date Received: 04/02/13 01:40

Method: 8260C - Volatile Organic Compounds (GC/MS)

Analyte	Result	Qualifier	RL	MDL	Unit	D	Prepared	Analyzed	Dil Fac
1,1,1,2-Tetrachloroethane	ND		5.0		ug/L			04/05/13 13:03	5
1,1,1-Trichloroethane	ND		5.0		ug/L			04/05/13 13:03	5
1,1,2,2-Tetrachloroethane	ND		2.5		ug/L			04/05/13 13:03	5
1,1,2-Trichloroethane	ND		5.0		ug/L			04/05/13 13:03	5
1,1-Dichloroethane	ND		5.0		ug/L			04/05/13 13:03	5
1,1-Dichloroethene	ND		5.0		ug/L			04/05/13 13:03	5
1,1-Dichloropropene	ND		5.0		ug/L			04/05/13 13:03	5
1,2,3-Trichlorobenzene	ND		5.0		ug/L			04/05/13 13:03	5
1,2,3-Trichloropropane	ND		5.0		ug/L			04/05/13 13:03	5
1,2,4-Trichlorobenzene	ND		5.0		ug/L			04/05/13 13:03	5
1,2,4-Trimethylbenzene	ND		5.0		ug/L			04/05/13 13:03	5
1,2-Dibromo-3-Chloropropane	ND		25		ug/L			04/05/13 13:03	5
1,2-Dichlorobenzene	ND		5.0		ug/L			04/05/13 13:03	5
1,2-Dichloroethane	ND		5.0		ug/L			04/05/13 13:03	5
1,2-Dichloropropane	ND		5.0		ug/L			04/05/13 13:03	5
1,3,5-Trimethylbenzene	ND		5.0		ug/L			04/05/13 13:03	5
1,3-Dichlorobenzene	ND		5.0		ug/L			04/05/13 13:03	5
1,3-Dichloropropane	ND		5.0		ug/L			04/05/13 13:03	5
1,4-Dichlorobenzene	ND		5.0		ug/L			04/05/13 13:03	5
1,4-Dioxane	ND		250		ug/L			04/05/13 13:03	5
2,2-Dichloropropane	ND		5.0		ug/L			04/05/13 13:03	5
2-Butanone (MEK)	ND		50		ug/L			04/05/13 13:03	5
2-Chlorotoluene	ND		5.0		ug/L			04/05/13 13:03	5
2-Hexanone	ND		50		ug/L			04/05/13 13:03	5
4-Chlorotoluene	ND		5.0		ug/L			04/05/13 13:03	5

Client Sample ID: MW-561-2013 0329-01
Date Collected: 03/29/13 10:15
Date Received: 04/02/13 01:40

Lab Sample ID: 480-35387-20
Matrix: Water

Method: 8260C - Volatile Organic Compounds (GC/MS) (Continued)

Analyte	Result	Qualifier	RL	MDL	Unit	D	Prepared	Analyzed	Dil Fac
4-Isopropyltoluene	ND		5.0		ug/L			04/05/13 13:03	5
4-Methyl-2-pentanone (MIBK)	ND		50		ug/L			04/05/13 13:03	5
Acetone	ND		250		ug/L			04/05/13 13:03	5
Benzene	ND		5.0		ug/L			04/05/13 13:03	5
Bromobenzene	ND		5.0		ug/L			04/05/13 13:03	5
Bromoform	ND		5.0		ug/L			04/05/13 13:03	5
Bromomethane	ND		10		ug/L			04/05/13 13:03	5
Carbon disulfide	ND		50		ug/L			04/05/13 13:03	5
Carbon tetrachloride	ND		5.0		ug/L			04/05/13 13:03	5
Chlorobenzene	ND		5.0		ug/L			04/05/13 13:03	5
Chlorobromomethane	ND		5.0		ug/L			04/05/13 13:03	5
Chlorodibromomethane	ND		2.5		ug/L			04/05/13 13:03	5
Chloroethane	ND		10		ug/L			04/05/13 13:03	5
Chloroform	ND		5.0		ug/L			04/05/13 13:03	5
Chloromethane	ND		10		ug/L			04/05/13 13:03	5
cis-1,2-Dichloroethene	**220**		5.0		ug/L			04/05/13 13:03	5
cis-1,3-Dichloropropene	ND		2.0		ug/L			04/05/13 13:03	5
Dichlorobromomethane	ND		2.5		ug/L			04/05/13 13:03	5
Dichlorodifluoromethane	ND		5.0		ug/L			04/05/13 13:03	5
Ethyl ether	ND		5.0		ug/L			04/05/13 13:03	5
Ethylbenzene	ND		5.0		ug/L			04/05/13 13:03	5
Ethylene Dibromide	ND		5.0		ug/L			04/05/13 13:03	5
Hexachlorobutadiene	ND		2.0		ug/L			04/05/13 13:03	5
Isopropyl ether	ND		50		ug/L			04/05/13 13:03	5
Isopropylbenzene	ND		5.0		ug/L			04/05/13 13:03	5
Methyl tert-butyl ether	ND		5.0		ug/L			04/05/13 13:03	5
Methylene Chloride	ND		5.0		ug/L			04/05/13 13:03	5
m-Xylene & p-Xylene	ND		10		ug/L			04/05/13 13:03	5
Naphthalene	ND		25		ug/L			04/05/13 13:03	5
n-Butylbenzene	ND		5.0		ug/L			04/05/13 13:03	5
N-Propylbenzene	ND		5.0		ug/L			04/05/13 13:03	5
o-Xylene	ND		5.0		ug/L			04/05/13 13:03	5
sec-Butylbenzene	ND		5.0		ug/L			04/05/13 13:03	5
Styrene	ND		5.0		ug/L			04/05/13 13:03	5
Tert-amyl methyl ether	ND		25		ug/L			04/05/13 13:03	5
Tert-butyl ethyl ether	ND		25		ug/L			04/05/13 13:03	5
tert-Butylbenzene	ND		5.0		ug/L			04/05/13 13:03	5
Tetrachloroethene	ND		5.0		ug/L			04/05/13 13:03	5
Tetrahydrofuran	ND		50		ug/L			04/05/13 13:03	5
Toluene	ND		5.0		ug/L			04/05/13 13:03	5
trans-1,2-Dichloroethene	**20**		5.0		ug/L			04/05/13 13:03	5
trans-1,3-Dichloropropene	ND		2.0		ug/L			04/05/13 13:03	5
Trichloroethene	**96**		5.0		ug/L			04/05/13 13:03	5
Trichlorofluoromethane	ND		5.0		ug/L			04/05/13 13:03	5
Vinyl chloride	**310**		5.0		ug/L			04/05/13 13:03	5
Dibromomethane	ND		5.0		ug/L			04/05/13 13:03	5

Surrogate	*%Recovery*	*Qualifier*	*Limits*	*Prepared*	*Analyzed*	*Dil Fac*
Toluene-d8 (Surr)	*96*		*70 - 130*		*04/05/13 13:03*	*5*
1,2-Dichloroethane-d4 (Surr)	*86*		*70 - 130*		*04/05/13 13:03*	*5*

Client Sample ID: MW-561-2013 0329-01

Lab Sample ID: 480-35387-20

Date Collected: 03/29/13 10:15

Matrix: Water

Date Received: 04/02/13 01:40

Method: 8260C - Volatile Organic Compounds (GC/MS) (Continued)

Surrogate	*%Recovery*	*Qualifier*	*Limits*	*Prepared*	*Analyzed*	*Dil Fac*
4-Bromofluorobenzene (Surr)	*103*		*70 - 130*		*04/05/13 13:03*	*5*

Client Sample ID: MW-562-2013 0329-01

Lab Sample ID: 480-35387-21

Date Collected: 03/29/13 12:30

Matrix: Water

Date Received: 04/02/13 01:40

Method: 8260C - Volatile Organic Compounds (GC/MS)

Analyte	Result	Qualifier	RL	MDL	Unit	D	Prepared	Analyzed	Dil Fac
1,1,1,2-Tetrachloroethane	ND		4.0		ug/L			04/05/13 13:27	4
1,1,1-Trichloroethane	ND		4.0		ug/L			04/05/13 13:27	4
1,1,2,2-Tetrachloroethane	ND		2.0		ug/L			04/05/13 13:27	4
1,1,2-Trichloroethane	ND		4.0		ug/L			04/05/13 13:27	4
1,1-Dichloroethane	ND		4.0		ug/L			04/05/13 13:27	4
1,1-Dichloroethene	ND		4.0		ug/L			04/05/13 13:27	4
1,1-Dichloropropene	ND		4.0		ug/L			04/05/13 13:27	4
1,2,3-Trichlorobenzene	ND		4.0		ug/L			04/05/13 13:27	4
1,2,3-Trichloropropane	ND		4.0		ug/L			04/05/13 13:27	4
1,2,4-Trichlorobenzene	ND		4.0		ug/L			04/05/13 13:27	4
1,2,4-Trimethylbenzene	ND		4.0		ug/L			04/05/13 13:27	4
1,2-Dibromo-3-Chloropropane	ND		20		ug/L			04/05/13 13:27	4
1,2-Dichlorobenzene	ND		4.0		ug/L			04/05/13 13:27	4
1,2-Dichloroethane	ND		4.0		ug/L			04/05/13 13:27	4
1,2-Dichloropropane	ND		4.0		ug/L			04/05/13 13:27	4
1,3,5-Trimethylbenzene	ND		4.0		ug/L			04/05/13 13:27	4
1,3-Dichlorobenzene	ND		4.0		ug/L			04/05/13 13:27	4
1,3-Dichloropropane	ND		4.0		ug/L			04/05/13 13:27	4
1,4-Dichlorobenzene	ND		4.0		ug/L			04/05/13 13:27	4
1,4-Dioxane	ND		200		ug/L			04/05/13 13:27	4
2,2-Dichloropropane	ND		4.0		ug/L			04/05/13 13:27	4
2-Butanone (MEK)	**540**		40		ug/L			04/05/13 13:27	4
2-Chlorotoluene	ND		4.0		ug/L			04/05/13 13:27	4
2-Hexanone	ND		40		ug/L			04/05/13 13:27	4
4-Chlorotoluene	ND		4.0		ug/L			04/05/13 13:27	4
4-Isopropyltoluene	ND		4.0		ug/L			04/05/13 13:27	4
4-Methyl-2-pentanone (MIBK)	ND		40		ug/L			04/05/13 13:27	4
Acetone	**930**		200		ug/L			04/05/13 13:27	4
Benzene	ND		4.0		ug/L			04/05/13 13:27	4
Bromobenzene	ND		4.0		ug/L			04/05/13 13:27	4
Bromoform	ND		4.0		ug/L			04/05/13 13:27	4
Bromomethane	ND		8.0		ug/L			04/05/13 13:27	4
Carbon disulfide	ND		40		ug/L			04/05/13 13:27	4
Carbon tetrachloride	ND		4.0		ug/L			04/05/13 13:27	4
Chlorobenzene	ND		4.0		ug/L			04/05/13 13:27	4
Chlorobromomethane	ND		4.0		ug/L			04/05/13 13:27	4
Chlorodibromomethane	ND		2.0		ug/L			04/05/13 13:27	4
Chloroethane	ND		8.0		ug/L			04/05/13 13:27	4
Chloroform	ND		4.0		ug/L			04/05/13 13:27	4
Chloromethane	ND		8.0		ug/L			04/05/13 13:27	4
cis-1,2-Dichloroethene	ND		4.0		ug/L			04/05/13 13:27	4

Client Sample ID: MW-562-2013 0329-01

Lab Sample ID: 480-35387-21

Date Collected: 03/29/13 12:30

Matrix: Water

Date Received: 04/02/13 01:40

Method: 8260C - Volatile Organic Compounds (GC/MS) (Continued)

Analyte	Result	Qualifier	RL	MDL	Unit	D	Prepared	Analyzed	Dil Fac
cis-1,3-Dichloropropene	ND		1.6		ug/L			04/05/13 13:27	4
Dichlorobromomethane	ND		2.0		ug/L			04/05/13 13:27	4
Dichlorodifluoromethane	ND		4.0		ug/L			04/05/13 13:27	4
Ethyl ether	ND		4.0		ug/L			04/05/13 13:27	4
Ethylbenzene	ND		4.0		ug/L			04/05/13 13:27	4
Ethylene Dibromide	ND		4.0		ug/L			04/05/13 13:27	4
Hexachlorobutadiene	ND		1.6		ug/L			04/05/13 13:27	4
Isopropyl ether	ND		40		ug/L			04/05/13 13:27	4
Isopropylbenzene	ND		4.0		ug/L			04/05/13 13:27	4
Methyl tert-butyl ether	ND		4.0		ug/L			04/05/13 13:27	4
Methylene Chloride	ND		4.0		ug/L			04/05/13 13:27	4
m-Xylene & p-Xylene	ND		8.0		ug/L			04/05/13 13:27	4
Naphthalene	ND		20		ug/L			04/05/13 13:27	4
n-Butylbenzene	ND		4.0		ug/L			04/05/13 13:27	4
N-Propylbenzene	ND		4.0		ug/L			04/05/13 13:27	4
o-Xylene	ND		4.0		ug/L			04/05/13 13:27	4
sec-Butylbenzene	ND		4.0		ug/L			04/05/13 13:27	4
Styrene	ND		4.0		ug/L			04/05/13 13:27	4
Tert-amyl methyl ether	ND		20		ug/L			04/05/13 13:27	4
Tert-butyl ethyl ether	ND		20		ug/L			04/05/13 13:27	4
tert-Butylbenzene	ND		4.0		ug/L			04/05/13 13:27	4
Tetrachloroethene	ND		4.0		ug/L			04/05/13 13:27	4
Tetrahydrofuran	ND		40		ug/L			04/05/13 13:27	4
Toluene	ND		4.0		ug/L			04/05/13 13:27	4
trans-1,2-Dichloroethene	ND		4.0		ug/L			04/05/13 13:27	4
trans-1,3-Dichloropropene	ND		1.6		ug/L			04/05/13 13:27	4
Trichloroethene	ND		4.0		ug/L			04/05/13 13:27	4
Trichlorofluoromethane	ND		4.0		ug/L			04/05/13 13:27	4
Vinyl chloride	ND		4.0		ug/L			04/05/13 13:27	4
Dibromomethane	ND		4.0		ug/L			04/05/13 13:27	4

Surrogate	*%Recovery*	*Qualifier*	*Limits*	*Prepared*	*Analyzed*	*Dil Fac*
Toluene-d8 (Surr)	*96*		*70 - 130*		*04/05/13 13:27*	*4*
1,2-Dichloroethane-d4 (Surr)	*87*		*70 - 130*		*04/05/13 13:27*	*4*
4-Bromofluorobenzene (Surr)	*103*		*70 - 130*		*04/05/13 13:27*	*4*

Client Sample ID: MW-563-2013 0329-01

Lab Sample ID: 480-35387-22

Date Collected: 03/29/13 09:35

Matrix: Water

Date Received: 04/02/13 01:40

Method: 8260C - Volatile Organic Compounds (GC/MS)

Analyte	Result	Qualifier	RL	MDL	Unit	D	Prepared	Analyzed	Dil Fac
1,1,1,2-Tetrachloroethane	ND		10		ug/L			04/05/13 04:55	10
1,1,1-Trichloroethane	ND		10		ug/L			04/05/13 04:55	10
1,1,2,2-Tetrachloroethane	ND		5.0		ug/L			04/05/13 04:55	10
1,1,2-Trichloroethane	ND		10		ug/L			04/05/13 04:55	10
1,1-Dichloroethane	ND		10		ug/L			04/05/13 04:55	10
1,1-Dichloroethene	ND		10		ug/L			04/05/13 04:55	10
1,1-Dichloropropene	ND		10		ug/L			04/05/13 04:55	10
1,2,3-Trichlorobenzene	ND		10		ug/L			04/05/13 04:55	10

Client Sample ID: MW-563-2013 0329-01
Date Collected: 03/29/13 09:35
Date Received: 04/02/13 01:40

Lab Sample ID: 480-35387-22
Matrix: Water

Method: 8260C - Volatile Organic Compounds (GC/MS) (Continued)

Analyte	Result	Qualifier	RL	MDL	Unit	D	Prepared	Analyzed	Dil Fac
1,2,3-Trichloropropane	ND		10		ug/L			04/05/13 04:55	10
1,2,4-Trichlorobenzene	ND		10		ug/L			04/05/13 04:55	10
1,2,4-Trimethylbenzene	ND		10		ug/L			04/05/13 04:55	10
1,2-Dibromo-3-Chloropropane	ND		50		ug/L			04/05/13 04:55	10
1,2-Dichlorobenzene	ND		10		ug/L			04/05/13 04:55	10
1,2-Dichloroethane	ND		10		ug/L			04/05/13 04:55	10
1,2-Dichloropropane	ND		10		ug/L			04/05/13 04:55	10
1,3,5-Trimethylbenzene	ND		10		ug/L			04/05/13 04:55	10
1,3-Dichlorobenzene	ND		10		ug/L			04/05/13 04:55	10
1,3-Dichloropropane	ND		10		ug/L			04/05/13 04:55	10
1,4-Dichlorobenzene	ND		10		ug/L			04/05/13 04:55	10
1,4-Dioxane	ND		500		ug/L			04/05/13 04:55	10
2,2-Dichloropropane	ND		10		ug/L			04/05/13 04:55	10
2-Butanone (MEK)	ND		100		ug/L			04/05/13 04:55	10
2-Chlorotoluene	ND		10		ug/L			04/05/13 04:55	10
2-Hexanone	ND		100		ug/L			04/05/13 04:55	10
4-Chlorotoluene	ND		10		ug/L			04/05/13 04:55	10
4-Isopropyltoluene	ND		10		ug/L			04/05/13 04:55	10
4-Methyl-2-pentanone (MIBK)	ND		100		ug/L			04/05/13 04:55	10
Acetone	ND		500		ug/L			04/05/13 04:55	10
Benzene	ND		10		ug/L			04/05/13 04:55	10
Bromobenzene	ND		10		ug/L			04/05/13 04:55	10
Bromoform	ND		10		ug/L			04/05/13 04:55	10
Bromomethane	ND		20		ug/L			04/05/13 04:55	10
Carbon disulfide	ND		100		ug/L			04/05/13 04:55	10
Carbon tetrachloride	ND		10		ug/L			04/05/13 04:55	10
Chlorobenzene	ND		10		ug/L			04/05/13 04:55	10
Chlorobromomethane	ND		10		ug/L			04/05/13 04:55	10
Chlorodibromomethane	ND		5.0		ug/L			04/05/13 04:55	10
Chloroethane	ND	*	20		ug/L			04/05/13 04:55	10
Chloroform	ND		10		ug/L			04/05/13 04:55	10
Chloromethane	ND		20		ug/L			04/05/13 04:55	10
cis-1,2-Dichloroethene	**420**		10		ug/L			04/05/13 04:55	10
cis-1,3-Dichloropropene	ND		4.0		ug/L			04/05/13 04:55	10
Dichlorobromomethane	ND		5.0		ug/L			04/05/13 04:55	10
Dichlorodifluoromethane	ND		10		ug/L			04/05/13 04:55	10
Ethyl ether	ND		10		ug/L			04/05/13 04:55	10
Ethylbenzene	ND		10		ug/L			04/05/13 04:55	10
Ethylene Dibromide	ND		10		ug/L			04/05/13 04:55	10
Hexachlorobutadiene	ND		4.0		ug/L			04/05/13 04:55	10
Isopropyl ether	ND		100		ug/L			04/05/13 04:55	10
Isopropylbenzene	ND		10		ug/L			04/05/13 04:55	10
Methyl tert-butyl ether	ND		10		ug/L			04/05/13 04:55	10
Methylene Chloride	ND		10		ug/L			04/05/13 04:55	10
m-Xylene & p-Xylene	ND		20		ug/L			04/05/13 04:55	10
Naphthalene	ND		50		ug/L			04/05/13 04:55	10
n-Butylbenzene	ND		10		ug/L			04/05/13 04:55	10
N-Propylbenzene	ND		10		ug/L			04/05/13 04:55	10
o-Xylene	ND		10		ug/L			04/05/13 04:55	10

Client Sample ID: MW-563-2013 0329-01

Lab Sample ID: 480-35387-22

Date Collected: 03/29/13 09:35

Matrix: Water

Date Received: 04/02/13 01:40

Method: 8260C - Volatile Organic Compounds (GC/MS) (Continued)

Analyte	Result	Qualifier	RL	MDL	Unit	D	Prepared	Analyzed	Dil Fac
sec-Butylbenzene	ND		10		ug/L			04/05/13 04:55	10
Styrene	ND		10		ug/L			04/05/13 04:55	10
Tert-amyl methyl ether	ND		50		ug/L			04/05/13 04:55	10
Tert-butyl ethyl ether	ND		50		ug/L			04/05/13 04:55	10
tert-Butylbenzene	ND		10		ug/L			04/05/13 04:55	10
Tetrachloroethene	ND		10		ug/L			04/05/13 04:55	10
Tetrahydrofuran	ND		100		ug/L			04/05/13 04:55	10
Toluene	ND		10		ug/L			04/05/13 04:55	10
trans-1,2-Dichloroethene	ND		10		ug/L			04/05/13 04:55	10
trans-1,3-Dichloropropene	ND		4.0		ug/L			04/05/13 04:55	10
Trichloroethene	ND		10		ug/L			04/05/13 04:55	10
Trichlorofluoromethane	ND		10		ug/L			04/05/13 04:55	10
Vinyl chloride	**91**		10		ug/L			04/05/13 04:55	10
Dibromomethane	ND		10		ug/L			04/05/13 04:55	10

Surrogate	*%Recovery*	*Qualifier*	*Limits*	*Prepared*	*Analyzed*	*Dil Fac*
Toluene-d8 (Surr)	*96*		*70 - 130*		*04/05/13 04:55*	*10*
1,2-Dichloroethane-d4 (Surr)	*86*		*70 - 130*		*04/05/13 04:55*	*10*
4-Bromofluorobenzene (Surr)	*105*		*70 - 130*		*04/05/13 04:55*	*10*

Client Sample ID: REW-1-2013 0328-01

Lab Sample ID: 480-35387-23

Date Collected: 03/28/13 12:25

Matrix: Water

Date Received: 04/02/13 01:40

Method: 8260C - Volatile Organic Compounds (GC/MS)

Analyte	Result	Qualifier	RL	MDL	Unit	D	Prepared	Analyzed	Dil Fac
1,1,1,2-Tetrachloroethane	ND		50		ug/L			04/05/13 05:18	50
1,1,1-Trichloroethane	ND		50		ug/L			04/05/13 05:18	50
1,1,2,2-Tetrachloroethane	ND		25		ug/L			04/05/13 05:18	50
1,1,2-Trichloroethane	ND		50		ug/L			04/05/13 05:18	50
1,1-Dichloroethane	ND		50		ug/L			04/05/13 05:18	50
1,1-Dichloroethene	ND		50		ug/L			04/05/13 05:18	50
1,1-Dichloropropene	ND		50		ug/L			04/05/13 05:18	50
1,2,3-Trichlorobenzene	ND		50		ug/L			04/05/13 05:18	50
1,2,3-Trichloropropane	ND		50		ug/L			04/05/13 05:18	50
1,2,4-Trichlorobenzene	ND		50		ug/L			04/05/13 05:18	50
1,2,4-Trimethylbenzene	ND		50		ug/L			04/05/13 05:18	50
1,2-Dibromo-3-Chloropropane	ND		250		ug/L			04/05/13 05:18	50
1,2-Dichlorobenzene	ND		50		ug/L			04/05/13 05:18	50
1,2-Dichloroethane	ND		50		ug/L			04/05/13 05:18	50
1,2-Dichloropropane	ND		50		ug/L			04/05/13 05:18	50
1,3,5-Trimethylbenzene	ND		50		ug/L			04/05/13 05:18	50
1,3-Dichlorobenzene	ND		50		ug/L			04/05/13 05:18	50
1,3-Dichloropropane	ND		50		ug/L			04/05/13 05:18	50
1,4-Dichlorobenzene	ND		50		ug/L			04/05/13 05:18	50
1,4-Dioxane	ND		2500		ug/L			04/05/13 05:18	50
2,2-Dichloropropane	ND		50		ug/L			04/05/13 05:18	50
2-Butanone (MEK)	ND		500		ug/L			04/05/13 05:18	50
2-Chlorotoluene	ND		50		ug/L			04/05/13 05:18	50
2-Hexanone	ND		500		ug/L			04/05/13 05:18	50

Client Sample ID: REW-1-2013 0328-01

Lab Sample ID: 480-35387-23

Date Collected: 03/28/13 12:25

Matrix: Water

Date Received: 04/02/13 01:40

Method: 8260C - Volatile Organic Compounds (GC/MS) (Continued)

Analyte	Result	Qualifier	RL	MDL	Unit	D	Prepared	Analyzed	Dil Fac
4-Chlorotoluene	ND		50		ug/L			04/05/13 05:18	50
4-Isopropyltoluene	ND		50		ug/L			04/05/13 05:18	50
4-Methyl-2-pentanone (MIBK)	ND		500		ug/L			04/05/13 05:18	50
Acetone	**24000**		2500		ug/L			04/05/13 05:18	50
Benzene	ND		50		ug/L			04/05/13 05:18	50
Bromobenzene	ND		50		ug/L			04/05/13 05:18	50
Bromoform	ND		50		ug/L			04/05/13 05:18	50
Bromomethane	ND		100		ug/L			04/05/13 05:18	50
Carbon disulfide	ND		500		ug/L			04/05/13 05:18	50
Carbon tetrachloride	ND		50		ug/L			04/05/13 05:18	50
Chlorobenzene	ND		50		ug/L			04/05/13 05:18	50
Chlorobromomethane	ND		50		ug/L			04/05/13 05:18	50
Chlorodibromomethane	ND		25		ug/L			04/05/13 05:18	50
Chloroethane	ND	*	100		ug/L			04/05/13 05:18	50
Chloroform	ND		50		ug/L			04/05/13 05:18	50
Chloromethane	ND		100		ug/L			04/05/13 05:18	50
cis-1,2-Dichloroethene	**81**		50		ug/L			04/05/13 05:18	50
cis-1,3-Dichloropropene	ND		20		ug/L			04/05/13 05:18	50
Dichlorobromomethane	ND		25		ug/L			04/05/13 05:18	50
Dichlorodifluoromethane	ND		50		ug/L			04/05/13 05:18	50
Ethyl ether	ND		50		ug/L			04/05/13 05:18	50
Ethylbenzene	ND		50		ug/L			04/05/13 05:18	50
Ethylene Dibromide	ND		50		ug/L			04/05/13 05:18	50
Hexachlorobutadiene	ND		20		ug/L			04/05/13 05:18	50
Isopropyl ether	ND		500		ug/L			04/05/13 05:18	50
Isopropylbenzene	ND		50		ug/L			04/05/13 05:18	50
Methyl tert-butyl ether	ND		50		ug/L			04/05/13 05:18	50
Methylene Chloride	ND		50		ug/L			04/05/13 05:18	50
m-Xylene & p-Xylene	ND		100		ug/L			04/05/13 05:18	50
Naphthalene	ND		250		ug/L			04/05/13 05:18	50
n-Butylbenzene	ND		50		ug/L			04/05/13 05:18	50
N-Propylbenzene	ND		50		ug/L			04/05/13 05:18	50
o-Xylene	ND		50		ug/L			04/05/13 05:18	50
sec-Butylbenzene	ND		50		ug/L			04/05/13 05:18	50
Styrene	ND		50		ug/L			04/05/13 05:18	50
Tert-amyl methyl ether	ND		250		ug/L			04/05/13 05:18	50
Tert-butyl ethyl ether	ND		250		ug/L			04/05/13 05:18	50
tert-Butylbenzene	ND		50		ug/L			04/05/13 05:18	50
Tetrachloroethene	ND		50		ug/L			04/05/13 05:18	50
Tetrahydrofuran	ND		500		ug/L			04/05/13 05:18	50
Toluene	ND		50		ug/L			04/05/13 05:18	50
trans-1,2-Dichloroethene	ND		50		ug/L			04/05/13 05:18	50
trans-1,3-Dichloropropene	ND		20		ug/L			04/05/13 05:18	50
Trichloroethene	ND		50		ug/L			04/05/13 05:18	50
Trichlorofluoromethane	ND		50		ug/L			04/05/13 05:18	50
Vinyl chloride	ND		50		ug/L			04/05/13 05:18	50
Dibromomethane	ND		50		ug/L			04/05/13 05:18	50

Surrogate	*%Recovery*	*Qualifier*	*Limits*	*Prepared*	*Analyzed*	*Dil Fac*
Toluene-d8 (Surr)	*95*		*70 - 130*		*04/05/13 05:18*	*50*

Client Sample ID: REW-1-2013 0328-01

Lab Sample ID: 480-35387-23

Date Collected: 03/28/13 12:25

Matrix: Water

Date Received: 04/02/13 01:40

Method: 8260C - Volatile Organic Compounds (GC/MS) (Continued)

Surrogate	*%Recovery*	*Qualifier*	*Limits*	*Prepared*	*Analyzed*	*Dil Fac*
1,2-Dichloroethane-d4 (Surr)	*88*		*70 - 130*		*04/05/13 05:18*	*50*
4-Bromofluorobenzene (Surr)	*103*		*70 - 130*		*04/05/13 05:18*	*50*

Client Sample ID: REW-4-2013 0328-01

Lab Sample ID: 480-35387-24

Date Collected: 03/28/13 13:25

Matrix: Water

Date Received: 04/02/13 01:40

Method: 8260C - Volatile Organic Compounds (GC/MS)

Analyte	Result	Qualifier	RL	MDL	Unit	D	Prepared	Analyzed	Dil Fac
1,1,1,2-Tetrachloroethane	ND		5.0		ug/L			04/05/13 05:42	5
1,1,1-Trichloroethane	ND		5.0		ug/L			04/05/13 05:42	5
1,1,2,2-Tetrachloroethane	ND		2.5		ug/L			04/05/13 05:42	5
1,1,2-Trichloroethane	ND		5.0		ug/L			04/05/13 05:42	5
1,1-Dichloroethane	ND		5.0		ug/L			04/05/13 05:42	5
1,1-Dichloroethene	ND		5.0		ug/L			04/05/13 05:42	5
1,1-Dichloropropene	ND		5.0		ug/L			04/05/13 05:42	5
1,2,3-Trichlorobenzene	ND		5.0		ug/L			04/05/13 05:42	5
1,2,3-Trichloropropane	ND		5.0		ug/L			04/05/13 05:42	5
1,2,4-Trichlorobenzene	ND		5.0		ug/L			04/05/13 05:42	5
1,2,4-Trimethylbenzene	ND		5.0		ug/L			04/05/13 05:42	5
1,2-Dibromo-3-Chloropropane	ND		25		ug/L			04/05/13 05:42	5
1,2-Dichlorobenzene	ND		5.0		ug/L			04/05/13 05:42	5
1,2-Dichloroethane	ND		5.0		ug/L			04/05/13 05:42	5
1,2-Dichloropropane	ND		5.0		ug/L			04/05/13 05:42	5
1,3,5-Trimethylbenzene	ND		5.0		ug/L			04/05/13 05:42	5
1,3-Dichlorobenzene	ND		5.0		ug/L			04/05/13 05:42	5
1,3-Dichloropropane	ND		5.0		ug/L			04/05/13 05:42	5
1,4-Dichlorobenzene	ND		5.0		ug/L			04/05/13 05:42	5
1,4-Dioxane	ND		250		ug/L			04/05/13 05:42	5
2,2-Dichloropropane	ND		5.0		ug/L			04/05/13 05:42	5
2-Butanone (MEK)	**81**		50		ug/L			04/05/13 05:42	5
2-Chlorotoluene	ND		5.0		ug/L			04/05/13 05:42	5
2-Hexanone	ND		50		ug/L			04/05/13 05:42	5
4-Chlorotoluene	ND		5.0		ug/L			04/05/13 05:42	5
4-Isopropyltoluene	ND		5.0		ug/L			04/05/13 05:42	5
4-Methyl-2-pentanone (MIBK)	ND		50		ug/L			04/05/13 05:42	5
Benzene	ND		5.0		ug/L			04/05/13 05:42	5
Bromobenzene	ND		5.0		ug/L			04/05/13 05:42	5
Bromoform	ND		5.0		ug/L			04/05/13 05:42	5
Bromomethane	ND		10		ug/L			04/05/13 05:42	5
Carbon disulfide	ND		50		ug/L			04/05/13 05:42	5
Carbon tetrachloride	ND		5.0		ug/L			04/05/13 05:42	5
Chlorobenzene	ND		5.0		ug/L			04/05/13 05:42	5
Chlorobromomethane	ND		5.0		ug/L			04/05/13 05:42	5
Chlorodibromomethane	ND		2.5		ug/L			04/05/13 05:42	5
Chloroethane	ND	*	10		ug/L			04/05/13 05:42	5
Chloroform	ND		5.0		ug/L			04/05/13 05:42	5
Chloromethane	ND		10		ug/L			04/05/13 05:42	5
cis-1,2-Dichloroethene	**41**		5.0		ug/L			04/05/13 05:42	5

Client Sample ID: REW-4-2013 0328-01

Lab Sample ID: 480-35387-24

Date Collected: 03/28/13 13:25

Matrix: Water

Date Received: 04/02/13 01:40

Method: 8260C - Volatile Organic Compounds (GC/MS) (Continued)

Analyte	Result	Qualifier	RL	MDL	Unit	D	Prepared	Analyzed	Dil Fac
cis-1,3-Dichloropropene	ND		2.0		ug/L			04/05/13 05:42	5
Dichlorobromomethane	ND		2.5		ug/L			04/05/13 05:42	5
Dichlorodifluoromethane	ND		5.0		ug/L			04/05/13 05:42	5
Ethyl ether	ND		5.0		ug/L			04/05/13 05:42	5
Ethylbenzene	ND		5.0		ug/L			04/05/13 05:42	5
Ethylene Dibromide	ND		5.0		ug/L			04/05/13 05:42	5
Hexachlorobutadiene	ND		2.0		ug/L			04/05/13 05:42	5
Isopropyl ether	ND		50		ug/L			04/05/13 05:42	5
Isopropylbenzene	ND		5.0		ug/L			04/05/13 05:42	5
Methyl tert-butyl ether	ND		5.0		ug/L			04/05/13 05:42	5
Methylene Chloride	ND		5.0		ug/L			04/05/13 05:42	5
m-Xylene & p-Xylene	ND		10		ug/L			04/05/13 05:42	5
Naphthalene	ND		25		ug/L			04/05/13 05:42	5
n-Butylbenzene	ND		5.0		ug/L			04/05/13 05:42	5
N-Propylbenzene	ND		5.0		ug/L			04/05/13 05:42	5
o-Xylene	ND		5.0		ug/L			04/05/13 05:42	5
sec-Butylbenzene	ND		5.0		ug/L			04/05/13 05:42	5
Styrene	ND		5.0		ug/L			04/05/13 05:42	5
Tert-amyl methyl ether	ND		25		ug/L			04/05/13 05:42	5
Tert-butyl ethyl ether	ND		25		ug/L			04/05/13 05:42	5
tert-Butylbenzene	ND		5.0		ug/L			04/05/13 05:42	5
Tetrachloroethene	ND		5.0		ug/L			04/05/13 05:42	5
Tetrahydrofuran	ND		50		ug/L			04/05/13 05:42	5
Toluene	ND		5.0		ug/L			04/05/13 05:42	5
trans-1,2-Dichloroethene	ND		5.0		ug/L			04/05/13 05:42	5
trans-1,3-Dichloropropene	ND		2.0		ug/L			04/05/13 05:42	5
Trichloroethene	ND		5.0		ug/L			04/05/13 05:42	5
Trichlorofluoromethane	ND		5.0		ug/L			04/05/13 05:42	5
Vinyl chloride	**31**		5.0		ug/L			04/05/13 05:42	5
Dibromomethane	ND		5.0		ug/L			04/05/13 05:42	5

Surrogate	*%Recovery*	*Qualifier*	*Limits*	*Prepared*	*Analyzed*	*Dil Fac*
Toluene-d8 (Surr)	*96*		*70 - 130*		*04/05/13 05:42*	*5*
1,2-Dichloroethane-d4 (Surr)	*89*		*70 - 130*		*04/05/13 05:42*	*5*
4-Bromofluorobenzene (Surr)	*104*		*70 - 130*		*04/05/13 05:42*	*5*

Method: 8260C - Volatile Organic Compounds (GC/MS) - DL

Analyte	Result	Qualifier	RL	MDL	Unit	D	Prepared	Analyzed	Dil Fac
Acetone	**4400**		500		ug/L			04/05/13 13:51	10

Surrogate	*%Recovery*	*Qualifier*	*Limits*	*Prepared*	*Analyzed*	*Dil Fac*
Toluene-d8 (Surr)	*96*		*70 - 130*		*04/05/13 13:51*	*10*
1,2-Dichloroethane-d4 (Surr)	*86*		*70 - 130*		*04/05/13 13:51*	*10*
4-Bromofluorobenzene (Surr)	*102*		*70 - 130*		*04/05/13 13:51*	*10*

Client Sample ID: REW-5-2013 0328-01
Date Collected: 03/28/13 14:00
Date Received: 04/02/13 01:40

Lab Sample ID: 480-35387-25
Matrix: Water

Method: 8260C - Volatile Organic Compounds (GC/MS)

Analyte	Result	Qualifier	RL	MDL	Unit	D	Prepared	Analyzed	Dil Fac
1,1,1,2-Tetrachloroethane	ND		10		ug/L			04/05/13 06:06	10
1,1,1-Trichloroethane	ND		10		ug/L			04/05/13 06:06	10
1,1,2,2-Tetrachloroethane	ND		5.0		ug/L			04/05/13 06:06	10
1,1,2-Trichloroethane	ND		10		ug/L			04/05/13 06:06	10
1,1-Dichloroethane	ND		10		ug/L			04/05/13 06:06	10
1,1-Dichloroethene	ND		10		ug/L			04/05/13 06:06	10
1,1-Dichloropropene	ND		10		ug/L			04/05/13 06:06	10
1,2,3-Trichlorobenzene	ND		10		ug/L			04/05/13 06:06	10
1,2,3-Trichloropropane	ND		10		ug/L			04/05/13 06:06	10
1,2,4-Trichlorobenzene	ND		10		ug/L			04/05/13 06:06	10
1,2,4-Trimethylbenzene	ND		10		ug/L			04/05/13 06:06	10
1,2-Dibromo-3-Chloropropane	ND		50		ug/L			04/05/13 06:06	10
1,2-Dichlorobenzene	ND		10		ug/L			04/05/13 06:06	10
1,2-Dichloroethane	ND		10		ug/L			04/05/13 06:06	10
1,2-Dichloropropane	ND		10		ug/L			04/05/13 06:06	10
1,3,5-Trimethylbenzene	ND		10		ug/L			04/05/13 06:06	10
1,3-Dichlorobenzene	ND		10		ug/L			04/05/13 06:06	10
1,3-Dichloropropane	ND		10		ug/L			04/05/13 06:06	10
1,4-Dichlorobenzene	ND		10		ug/L			04/05/13 06:06	10
1,4-Dioxane	ND		500		ug/L			04/05/13 06:06	10
2,2-Dichloropropane	ND		10		ug/L			04/05/13 06:06	10
2-Butanone (MEK)	ND		100		ug/L			04/05/13 06:06	10
2-Chlorotoluene	ND		10		ug/L			04/05/13 06:06	10
2-Hexanone	ND		100		ug/L			04/05/13 06:06	10
4-Chlorotoluene	ND		10		ug/L			04/05/13 06:06	10
4-Isopropyltoluene	ND		10		ug/L			04/05/13 06:06	10
4-Methyl-2-pentanone (MIBK)	ND		100		ug/L			04/05/13 06:06	10
Acetone	**4800**		500		ug/L			04/05/13 06:06	10
Benzene	ND		10		ug/L			04/05/13 06:06	10
Bromobenzene	ND		10		ug/L			04/05/13 06:06	10
Bromoform	ND		10		ug/L			04/05/13 06:06	10
Bromomethane	ND		20		ug/L			04/05/13 06:06	10
Carbon disulfide	ND		100		ug/L			04/05/13 06:06	10
Carbon tetrachloride	ND		10		ug/L			04/05/13 06:06	10
Chlorobenzene	ND		10		ug/L			04/05/13 06:06	10
Chlorobromomethane	ND		10		ug/L			04/05/13 06:06	10
Chlorodibromomethane	ND		5.0		ug/L			04/05/13 06:06	10
Chloroethane	ND	*	20		ug/L			04/05/13 06:06	10
Chloroform	ND		10		ug/L			04/05/13 06:06	10
Chloromethane	ND		20		ug/L			04/05/13 06:06	10
cis-1,2-Dichloroethene	**290**		10		ug/L			04/05/13 06:06	10
cis-1,3-Dichloropropene	ND		4.0		ug/L			04/05/13 06:06	10
Dichlorobromomethane	ND		5.0		ug/L			04/05/13 06:06	10
Dichlorodifluoromethane	ND		10		ug/L			04/05/13 06:06	10
Ethyl ether	ND		10		ug/L			04/05/13 06:06	10
Ethylbenzene	ND		10		ug/L			04/05/13 06:06	10
Ethylene Dibromide	ND		10		ug/L			04/05/13 06:06	10
Hexachlorobutadiene	ND		4.0		ug/L			04/05/13 06:06	10
Isopropyl ether	ND		100		ug/L			04/05/13 06:06	10

Client Sample ID: REW-5-2013 0328-01

Lab Sample ID: 480-35387-25

Date Collected: 03/28/13 14:00

Matrix: Water

Date Received: 04/02/13 01:40

Method: 8260C - Volatile Organic Compounds (GC/MS) (Continued)

Analyte	Result	Qualifier	RL	MDL	Unit	D	Prepared	Analyzed	Dil Fac
Isopropylbenzene	ND		10		ug/L			04/05/13 06:06	10
Methyl tert-butyl ether	ND		10		ug/L			04/05/13 06:06	10
Methylene Chloride	ND		10		ug/L			04/05/13 06:06	10
m-Xylene & p-Xylene	ND		20		ug/L			04/05/13 06:06	10
Naphthalene	ND		50		ug/L			04/05/13 06:06	10
n-Butylbenzene	ND		10		ug/L			04/05/13 06:06	10
N-Propylbenzene	ND		10		ug/L			04/05/13 06:06	10
o-Xylene	ND		10		ug/L			04/05/13 06:06	10
sec-Butylbenzene	ND		10		ug/L			04/05/13 06:06	10
Styrene	ND		10		ug/L			04/05/13 06:06	10
Tert-amyl methyl ether	ND		50		ug/L			04/05/13 06:06	10
Tert-butyl ethyl ether	ND		50		ug/L			04/05/13 06:06	10
tert-Butylbenzene	ND		10		ug/L			04/05/13 06:06	10
Tetrachloroethene	ND		10		ug/L			04/05/13 06:06	10
Tetrahydrofuran	ND		100		ug/L			04/05/13 06:06	10
Toluene	ND		10		ug/L			04/05/13 06:06	10
trans-1,2-Dichloroethene	ND		10		ug/L			04/05/13 06:06	10
trans-1,3-Dichloropropene	ND		4.0		ug/L			04/05/13 06:06	10
Trichloroethene	**93**		10		ug/L			04/05/13 06:06	10
Trichlorofluoromethane	ND		10		ug/L			04/05/13 06:06	10
Vinyl chloride	**44**		10		ug/L			04/05/13 06:06	10
Dibromomethane	ND		10		ug/L			04/05/13 06:06	10

Surrogate	*%Recovery*	*Qualifier*	*Limits*	*Prepared*	*Analyzed*	*Dil Fac*
Toluene-d8 (Surr)	*97*		*70 - 130*		*04/05/13 06:06*	*10*
1,2-Dichloroethane-d4 (Surr)	*89*		*70 - 130*		*04/05/13 06:06*	*10*
4-Bromofluorobenzene (Surr)	*105*		*70 - 130*		*04/05/13 06:06*	*10*

Client Sample ID: REW-6-2013 0329-01

Lab Sample ID: 480-35387-26

Date Collected: 03/29/13 07:35

Matrix: Water

Date Received: 04/02/13 01:40

Method: 8260C - Volatile Organic Compounds (GC/MS)

Analyte	Result	Qualifier	RL	MDL	Unit	D	Prepared	Analyzed	Dil Fac
1,1,1,2-Tetrachloroethane	ND		10		ug/L			04/05/13 06:30	10
1,1,1-Trichloroethane	ND		10		ug/L			04/05/13 06:30	10
1,1,2,2-Tetrachloroethane	ND		5.0		ug/L			04/05/13 06:30	10
1,1,2-Trichloroethane	ND		10		ug/L			04/05/13 06:30	10
1,1-Dichloroethane	ND		10		ug/L			04/05/13 06:30	10
1,1-Dichloroethene	ND		10		ug/L			04/05/13 06:30	10
1,1-Dichloropropene	ND		10		ug/L			04/05/13 06:30	10
1,2,3-Trichlorobenzene	ND		10		ug/L			04/05/13 06:30	10
1,2,3-Trichloropropane	ND		10		ug/L			04/05/13 06:30	10
1,2,4-Trichlorobenzene	ND		10		ug/L			04/05/13 06:30	10
1,2,4-Trimethylbenzene	ND		10		ug/L			04/05/13 06:30	10
1,2-Dibromo-3-Chloropropane	ND		50		ug/L			04/05/13 06:30	10
1,2-Dichlorobenzene	ND		10		ug/L			04/05/13 06:30	10
1,2-Dichloroethane	ND		10		ug/L			04/05/13 06:30	10
1,2-Dichloropropane	ND		10		ug/L			04/05/13 06:30	10
1,3,5-Trimethylbenzene	ND		10		ug/L			04/05/13 06:30	10

Client Sample ID: REW-6-2013 0329-01

Lab Sample ID: 480-35387-26

Date Collected: 03/29/13 07:35

Matrix: Water

Date Received: 04/02/13 01:40

Method: 8260C - Volatile Organic Compounds (GC/MS) (Continued)

Analyte	Result	Qualifier	RL	MDL	Unit	D	Prepared	Analyzed	Dil Fac
1,3-Dichlorobenzene	ND		10		ug/L			04/05/13 06:30	10
1,3-Dichloropropane	ND		10		ug/L			04/05/13 06:30	10
1,4-Dichlorobenzene	ND		10		ug/L			04/05/13 06:30	10
1,4-Dioxane	ND		500		ug/L			04/05/13 06:30	10
2,2-Dichloropropane	ND		10		ug/L			04/05/13 06:30	10
2-Butanone (MEK)	ND		100		ug/L			04/05/13 06:30	10
2-Chlorotoluene	ND		10		ug/L			04/05/13 06:30	10
2-Hexanone	ND		100		ug/L			04/05/13 06:30	10
4-Chlorotoluene	ND		10		ug/L			04/05/13 06:30	10
4-Isopropyltoluene	ND		10		ug/L			04/05/13 06:30	10
4-Methyl-2-pentanone (MIBK)	ND		100		ug/L			04/05/13 06:30	10
Acetone	ND		500		ug/L			04/05/13 06:30	10
Benzene	ND		10		ug/L			04/05/13 06:30	10
Bromobenzene	ND		10		ug/L			04/05/13 06:30	10
Bromoform	ND		10		ug/L			04/05/13 06:30	10
Bromomethane	ND		20		ug/L			04/05/13 06:30	10
Carbon disulfide	ND		100		ug/L			04/05/13 06:30	10
Carbon tetrachloride	ND		10		ug/L			04/05/13 06:30	10
Chlorobenzene	ND		10		ug/L			04/05/13 06:30	10
Chlorobromomethane	ND		10		ug/L			04/05/13 06:30	10
Chlorodibromomethane	ND		5.0		ug/L			04/05/13 06:30	10
Chloroethane	ND	*	20		ug/L			04/05/13 06:30	10
Chloroform	ND		10		ug/L			04/05/13 06:30	10
Chloromethane	ND		20		ug/L			04/05/13 06:30	10
cis-1,2-Dichloroethene	**420**		10		ug/L			04/05/13 06:30	10
cis-1,3-Dichloropropene	ND		4.0		ug/L			04/05/13 06:30	10
Dichlorobromomethane	ND		5.0		ug/L			04/05/13 06:30	10
Dichlorodifluoromethane	ND		10		ug/L			04/05/13 06:30	10
Ethyl ether	ND		10		ug/L			04/05/13 06:30	10
Ethylbenzene	ND		10		ug/L			04/05/13 06:30	10
Ethylene Dibromide	ND		10		ug/L			04/05/13 06:30	10
Hexachlorobutadiene	ND		4.0		ug/L			04/05/13 06:30	10
Isopropyl ether	ND		100		ug/L			04/05/13 06:30	10
Isopropylbenzene	ND		10		ug/L			04/05/13 06:30	10
Methyl tert-butyl ether	ND		10		ug/L			04/05/13 06:30	10
Methylene Chloride	ND		10		ug/L			04/05/13 06:30	10
m-Xylene & p-Xylene	ND		20		ug/L			04/05/13 06:30	10
Naphthalene	ND		50		ug/L			04/05/13 06:30	10
n-Butylbenzene	ND		10		ug/L			04/05/13 06:30	10
N-Propylbenzene	ND		10		ug/L			04/05/13 06:30	10
o-Xylene	ND		10		ug/L			04/05/13 06:30	10
sec-Butylbenzene	ND		10		ug/L			04/05/13 06:30	10
Styrene	ND		10		ug/L			04/05/13 06:30	10
Tert-amyl methyl ether	ND		50		ug/L			04/05/13 06:30	10
Tert-butyl ethyl ether	ND		50		ug/L			04/05/13 06:30	10
tert-Butylbenzene	ND		10		ug/L			04/05/13 06:30	10
Tetrachloroethene	**18**		10		ug/L			04/05/13 06:30	10
Tetrahydrofuran	ND		100		ug/L			04/05/13 06:30	10
Toluene	ND		10		ug/L			04/05/13 06:30	10

Client Sample ID: REW-6-2013 0329-01

Lab Sample ID: 480-35387-26

Date Collected: 03/29/13 07:35

Matrix: Water

Date Received: 04/02/13 01:40

Method: 8260C - Volatile Organic Compounds (GC/MS) (Continued)

Analyte	Result	Qualifier	RL	MDL	Unit	D	Prepared	Analyzed	Dil Fac
trans-1,2-Dichloroethene	ND		10		ug/L			04/05/13 06:30	10
trans-1,3-Dichloropropene	ND		4.0		ug/L			04/05/13 06:30	10
Trichloroethene	**510**		10		ug/L			04/05/13 06:30	10
Trichlorofluoromethane	ND		10		ug/L			04/05/13 06:30	10
Vinyl chloride	**17**		10		ug/L			04/05/13 06:30	10
Dibromomethane	ND		10		ug/L			04/05/13 06:30	10

Surrogate	*%Recovery*	*Qualifier*	*Limits*	*Prepared*	*Analyzed*	*Dil Fac*
Toluene-d8 (Surr)	*96*		*70 - 130*		*04/05/13 06:30*	*10*
1,2-Dichloroethane-d4 (Surr)	*87*		*70 - 130*		*04/05/13 06:30*	*10*
4-Bromofluorobenzene (Surr)	*103*		*70 - 130*		*04/05/13 06:30*	*10*

Client Sample ID: REW-7-2013 0401-01

Lab Sample ID: 480-35387-27

Date Collected: 04/01/13 09:55

Matrix: Water

Date Received: 04/02/13 01:40

Method: 8260C - Volatile Organic Compounds (GC/MS)

Analyte	Result	Qualifier	RL	MDL	Unit	D	Prepared	Analyzed	Dil Fac
1,1,1,2-Tetrachloroethane	ND		10		ug/L			04/05/13 06:53	10
1,1,1-Trichloroethane	ND		10		ug/L			04/05/13 06:53	10
1,1,2,2-Tetrachloroethane	ND		5.0		ug/L			04/05/13 06:53	10
1,1,2-Trichloroethane	ND		10		ug/L			04/05/13 06:53	10
1,1-Dichloroethane	ND		10		ug/L			04/05/13 06:53	10
1,1-Dichloroethene	ND		10		ug/L			04/05/13 06:53	10
1,1-Dichloropropene	ND		10		ug/L			04/05/13 06:53	10
1,2,3-Trichlorobenzene	ND		10		ug/L			04/05/13 06:53	10
1,2,3-Trichloropropane	ND		10		ug/L			04/05/13 06:53	10
1,2,4-Trichlorobenzene	ND		10		ug/L			04/05/13 06:53	10
1,2,4-Trimethylbenzene	ND		10		ug/L			04/05/13 06:53	10
1,2-Dibromo-3-Chloropropane	ND		50		ug/L			04/05/13 06:53	10
1,2-Dichlorobenzene	ND		10		ug/L			04/05/13 06:53	10
1,2-Dichloroethane	ND		10		ug/L			04/05/13 06:53	10
1,2-Dichloropropane	ND		10		ug/L			04/05/13 06:53	10
1,3,5-Trimethylbenzene	ND		10		ug/L			04/05/13 06:53	10
1,3-Dichlorobenzene	ND		10		ug/L			04/05/13 06:53	10
1,3-Dichloropropane	ND		10		ug/L			04/05/13 06:53	10
1,4-Dichlorobenzene	ND		10		ug/L			04/05/13 06:53	10
1,4-Dioxane	ND		500		ug/L			04/05/13 06:53	10
2,2-Dichloropropane	ND		10		ug/L			04/05/13 06:53	10
2-Butanone (MEK)	ND		100		ug/L			04/05/13 06:53	10
2-Chlorotoluene	ND		10		ug/L			04/05/13 06:53	10
2-Hexanone	ND		100		ug/L			04/05/13 06:53	10
4-Chlorotoluene	ND		10		ug/L			04/05/13 06:53	10
4-Isopropyltoluene	ND		10		ug/L			04/05/13 06:53	10
4-Methyl-2-pentanone (MIBK)	ND		100		ug/L			04/05/13 06:53	10
Acetone	ND		500		ug/L			04/05/13 06:53	10
Benzene	ND		10		ug/L			04/05/13 06:53	10
Bromobenzene	ND		10		ug/L			04/05/13 06:53	10
Bromoform	ND		10		ug/L			04/05/13 06:53	10
Bromomethane	ND		20		ug/L			04/05/13 06:53	10

Client Sample ID: REW-7-2013 0401-01
Date Collected: 04/01/13 09:55
Date Received: 04/02/13 01:40

Lab Sample ID: 480-35387-27
Matrix: Water

Method: 8260C - Volatile Organic Compounds (GC/MS) (Continued)

Analyte	Result	Qualifier	RL	MDL	Unit	D	Prepared	Analyzed	Dil Fac
Carbon disulfide	ND		100		ug/L			04/05/13 06:53	10
Carbon tetrachloride	ND		10		ug/L			04/05/13 06:53	10
Chlorobenzene	ND		10		ug/L			04/05/13 06:53	10
Chlorobromomethane	ND		10		ug/L			04/05/13 06:53	10
Chlorodibromomethane	ND		5.0		ug/L			04/05/13 06:53	10
Chloroethane	ND	*	20		ug/L			04/05/13 06:53	10
Chloroform	ND		10		ug/L			04/05/13 06:53	10
Chloromethane	ND		20		ug/L			04/05/13 06:53	10
cis-1,2-Dichloroethene	**920**		10		ug/L			04/05/13 06:53	10
cis-1,3-Dichloropropene	ND		4.0		ug/L			04/05/13 06:53	10
Dichlorobromomethane	ND		5.0		ug/L			04/05/13 06:53	10
Dichlorodifluoromethane	ND		10		ug/L			04/05/13 06:53	10
Ethyl ether	ND		10		ug/L			04/05/13 06:53	10
Ethylbenzene	ND		10		ug/L			04/05/13 06:53	10
Ethylene Dibromide	ND		10		ug/L			04/05/13 06:53	10
Hexachlorobutadiene	ND		4.0		ug/L			04/05/13 06:53	10
Isopropyl ether	ND		100		ug/L			04/05/13 06:53	10
Isopropylbenzene	ND		10		ug/L			04/05/13 06:53	10
Methyl tert-butyl ether	ND		10		ug/L			04/05/13 06:53	10
Methylene Chloride	ND		10		ug/L			04/05/13 06:53	10
m-Xylene & p-Xylene	ND		20		ug/L			04/05/13 06:53	10
Naphthalene	ND		50		ug/L			04/05/13 06:53	10
n-Butylbenzene	ND		10		ug/L			04/05/13 06:53	10
N-Propylbenzene	ND		10		ug/L			04/05/13 06:53	10
o-Xylene	ND		10		ug/L			04/05/13 06:53	10
sec-Butylbenzene	ND		10		ug/L			04/05/13 06:53	10
Styrene	ND		10		ug/L			04/05/13 06:53	10
Tert-amyl methyl ether	ND		50		ug/L			04/05/13 06:53	10
Tert-butyl ethyl ether	ND		50		ug/L			04/05/13 06:53	10
tert-Butylbenzene	ND		10		ug/L			04/05/13 06:53	10
Tetrachloroethene	ND		10		ug/L			04/05/13 06:53	10
Tetrahydrofuran	ND		100		ug/L			04/05/13 06:53	10
Toluene	ND		10		ug/L			04/05/13 06:53	10
trans-1,2-Dichloroethene	ND		10		ug/L			04/05/13 06:53	10
trans-1,3-Dichloropropene	ND		4.0		ug/L			04/05/13 06:53	10
Trichloroethene	**300**		10		ug/L			04/05/13 06:53	10
Trichlorofluoromethane	ND		10		ug/L			04/05/13 06:53	10
Vinyl chloride	**130**		10		ug/L			04/05/13 06:53	10
Dibromomethane	ND		10		ug/L			04/05/13 06:53	10

Surrogate	*%Recovery*	*Qualifier*	*Limits*	*Prepared*	*Analyzed*	*Dil Fac*
Toluene-d8 (Surr)	*96*		*70 - 130*		*04/05/13 06:53*	*10*
1,2-Dichloroethane-d4 (Surr)	*88*		*70 - 130*		*04/05/13 06:53*	*10*
4-Bromofluorobenzene (Surr)	*101*		*70 - 130*		*04/05/13 06:53*	*10*

Client Sample ID: REW-8-2013 0328-01
Date Collected: 03/28/13 08:55
Date Received: 04/02/13 01:40

Lab Sample ID: 480-35387-28
Matrix: Water

Method: 8260C - Volatile Organic Compounds (GC/MS)

Analyte	Result	Qualifier	RL	MDL	Unit	D	Prepared	Analyzed	Dil Fac
1,1,1,2-Tetrachloroethane	ND		10		ug/L			04/05/13 07:17	10
1,1,1-Trichloroethane	ND		10		ug/L			04/05/13 07:17	10
1,1,2,2-Tetrachloroethane	ND		5.0		ug/L			04/05/13 07:17	10
1,1,2-Trichloroethane	ND		10		ug/L			04/05/13 07:17	10
1,1-Dichloroethane	ND		10		ug/L			04/05/13 07:17	10
1,1-Dichloroethene	ND		10		ug/L			04/05/13 07:17	10
1,1-Dichloropropene	ND		10		ug/L			04/05/13 07:17	10
1,2,3-Trichlorobenzene	ND		10		ug/L			04/05/13 07:17	10
1,2,3-Trichloropropane	ND		10		ug/L			04/05/13 07:17	10
1,2,4-Trichlorobenzene	ND		10		ug/L			04/05/13 07:17	10
1,2,4-Trimethylbenzene	ND		10		ug/L			04/05/13 07:17	10
1,2-Dibromo-3-Chloropropane	ND		50		ug/L			04/05/13 07:17	10
1,2-Dichlorobenzene	ND		10		ug/L			04/05/13 07:17	10
1,2-Dichloroethane	ND		10		ug/L			04/05/13 07:17	10
1,2-Dichloropropane	ND		10		ug/L			04/05/13 07:17	10
1,3,5-Trimethylbenzene	ND		10		ug/L			04/05/13 07:17	10
1,3-Dichlorobenzene	ND		10		ug/L			04/05/13 07:17	10
1,3-Dichloropropane	ND		10		ug/L			04/05/13 07:17	10
1,4-Dichlorobenzene	ND		10		ug/L			04/05/13 07:17	10
1,4-Dioxane	ND		500		ug/L			04/05/13 07:17	10
2,2-Dichloropropane	ND		10		ug/L			04/05/13 07:17	10
2-Butanone (MEK)	ND		100		ug/L			04/05/13 07:17	10
2-Chlorotoluene	ND		10		ug/L			04/05/13 07:17	10
2-Hexanone	ND		100		ug/L			04/05/13 07:17	10
4-Chlorotoluene	ND		10		ug/L			04/05/13 07:17	10
4-Isopropyltoluene	ND		10		ug/L			04/05/13 07:17	10
4-Methyl-2-pentanone (MIBK)	ND		100		ug/L			04/05/13 07:17	10
Acetone	ND		500		ug/L			04/05/13 07:17	10
Benzene	ND		10		ug/L			04/05/13 07:17	10
Bromobenzene	ND		10		ug/L			04/05/13 07:17	10
Bromoform	ND		10		ug/L			04/05/13 07:17	10
Bromomethane	ND		20		ug/L			04/05/13 07:17	10
Carbon disulfide	ND		100		ug/L			04/05/13 07:17	10
Carbon tetrachloride	ND		10		ug/L			04/05/13 07:17	10
Chlorobenzene	ND		10		ug/L			04/05/13 07:17	10
Chlorobromomethane	ND		10		ug/L			04/05/13 07:17	10
Chlorodibromomethane	ND		5.0		ug/L			04/05/13 07:17	10
Chloroethane	ND	*	20		ug/L			04/05/13 07:17	10
Chloroform	ND		10		ug/L			04/05/13 07:17	10
Chloromethane	ND		20		ug/L			04/05/13 07:17	10
cis-1,2-Dichloroethene	**410**		10		ug/L			04/05/13 07:17	10
cis-1,3-Dichloropropene	ND		4.0		ug/L			04/05/13 07:17	10
Dichlorobromomethane	ND		5.0		ug/L			04/05/13 07:17	10
Dichlorodifluoromethane	ND		10		ug/L			04/05/13 07:17	10
Ethyl ether	ND		10		ug/L			04/05/13 07:17	10
Ethylbenzene	ND		10		ug/L			04/05/13 07:17	10
Ethylene Dibromide	ND		10		ug/L			04/05/13 07:17	10
Hexachlorobutadiene	ND		4.0		ug/L			04/05/13 07:17	10
Isopropyl ether	ND		100		ug/L			04/05/13 07:17	10

Client Sample ID: REW-8-2013 0328-01

Lab Sample ID: 480-35387-28

Date Collected: 03/28/13 08:55

Matrix: Water

Date Received: 04/02/13 01:40

Method: 8260C - Volatile Organic Compounds (GC/MS) (Continued)

Analyte	Result	Qualifier	RL	MDL	Unit	D	Prepared	Analyzed	Dil Fac
Isopropylbenzene	ND		10		ug/L			04/05/13 07:17	10
Methyl tert-butyl ether	ND		10		ug/L			04/05/13 07:17	10
Methylene Chloride	ND		10		ug/L			04/05/13 07:17	10
m-Xylene & p-Xylene	ND		20		ug/L			04/05/13 07:17	10
Naphthalene	ND		50		ug/L			04/05/13 07:17	10
n-Butylbenzene	ND		10		ug/L			04/05/13 07:17	10
N-Propylbenzene	ND		10		ug/L			04/05/13 07:17	10
o-Xylene	ND		10		ug/L			04/05/13 07:17	10
sec-Butylbenzene	ND		10		ug/L			04/05/13 07:17	10
Styrene	ND		10		ug/L			04/05/13 07:17	10
Tert-amyl methyl ether	ND		50		ug/L			04/05/13 07:17	10
Tert-butyl ethyl ether	ND		50		ug/L			04/05/13 07:17	10
tert-Butylbenzene	ND		10		ug/L			04/05/13 07:17	10
Tetrachloroethene	ND		10		ug/L			04/05/13 07:17	10
Tetrahydrofuran	ND		100		ug/L			04/05/13 07:17	10
Toluene	ND		10		ug/L			04/05/13 07:17	10
trans-1,2-Dichloroethene	ND		10		ug/L			04/05/13 07:17	10
trans-1,3-Dichloropropene	ND		4.0		ug/L			04/05/13 07:17	10
Trichloroethene	**300**		10		ug/L			04/05/13 07:17	10
Trichlorofluoromethane	ND		10		ug/L			04/05/13 07:17	10
Vinyl chloride	**72**		10		ug/L			04/05/13 07:17	10
Dibromomethane	ND		10		ug/L			04/05/13 07:17	10

Surrogate	*%Recovery*	*Qualifier*	*Limits*	*Prepared*	*Analyzed*	*Dil Fac*
Toluene-d8 (Surr)	*95*		*70 - 130*		*04/05/13 07:17*	*10*
1,2-Dichloroethane-d4 (Surr)	*87*		*70 - 130*		*04/05/13 07:17*	*10*
4-Bromofluorobenzene (Surr)	*103*		*70 - 130*		*04/05/13 07:17*	*10*

Client Sample ID: REW-9-2013 0328-01

Lab Sample ID: 480-35387-29

Date Collected: 03/28/13 10:30

Matrix: Water

Date Received: 04/02/13 01:40

Method: 8260C - Volatile Organic Compounds (GC/MS)

Analyte	Result	Qualifier	RL	MDL	Unit	D	Prepared	Analyzed	Dil Fac
1,1,1,2-Tetrachloroethane	ND		1.0		ug/L			04/05/13 14:15	1
1,1,1-Trichloroethane	ND		1.0		ug/L			04/05/13 14:15	1
1,1,2,2-Tetrachloroethane	ND		0.50		ug/L			04/05/13 14:15	1
1,1,2-Trichloroethane	ND		1.0		ug/L			04/05/13 14:15	1
1,1-Dichloroethane	ND		1.0		ug/L			04/05/13 14:15	1
1,1-Dichloroethene	ND		1.0		ug/L			04/05/13 14:15	1
1,1-Dichloropropene	ND		1.0		ug/L			04/05/13 14:15	1
1,2,3-Trichlorobenzene	ND		1.0		ug/L			04/05/13 14:15	1
1,2,3-Trichloropropane	ND		1.0		ug/L			04/05/13 14:15	1
1,2,4-Trichlorobenzene	ND		1.0		ug/L			04/05/13 14:15	1
1,2,4-Trimethylbenzene	ND		1.0		ug/L			04/05/13 14:15	1
1,2-Dibromo-3-Chloropropane	ND		5.0		ug/L			04/05/13 14:15	1
1,2-Dichlorobenzene	ND		1.0		ug/L			04/05/13 14:15	1
1,2-Dichloroethane	ND		1.0		ug/L			04/05/13 14:15	1
1,2-Dichloropropane	ND		1.0		ug/L			04/05/13 14:15	1
1,3,5-Trimethylbenzene	ND		1.0		ug/L			04/05/13 14:15	1

Client Sample ID: REW-9-2013 0328-01
Date Collected: 03/28/13 10:30
Date Received: 04/02/13 01:40

Lab Sample ID: 480-35387-29
Matrix: Water

Method: 8260C - Volatile Organic Compounds (GC/MS) (Continued)

Analyte	Result	Qualifier	RL	MDL	Unit	D	Prepared	Analyzed	Dil Fac
1,3-Dichlorobenzene	ND		1.0		ug/L			04/05/13 14:15	1
1,3-Dichloropropane	ND		1.0		ug/L			04/05/13 14:15	1
1,4-Dichlorobenzene	ND		1.0		ug/L			04/05/13 14:15	1
1,4-Dioxane	ND		50		ug/L			04/05/13 14:15	1
2,2-Dichloropropane	ND		1.0		ug/L			04/05/13 14:15	1
2-Butanone (MEK)	ND		10		ug/L			04/05/13 14:15	1
2-Chlorotoluene	ND		1.0		ug/L			04/05/13 14:15	1
2-Hexanone	ND		10		ug/L			04/05/13 14:15	1
4-Chlorotoluene	ND		1.0		ug/L			04/05/13 14:15	1
4-Isopropyltoluene	ND		1.0		ug/L			04/05/13 14:15	1
4-Methyl-2-pentanone (MIBK)	ND		10		ug/L			04/05/13 14:15	1
Acetone	ND		50		ug/L			04/05/13 14:15	1
Benzene	ND		1.0		ug/L			04/05/13 14:15	1
Bromobenzene	ND		1.0		ug/L			04/05/13 14:15	1
Bromoform	ND		1.0		ug/L			04/05/13 14:15	1
Bromomethane	ND		2.0		ug/L			04/05/13 14:15	1
Carbon disulfide	ND		10		ug/L			04/05/13 14:15	1
Carbon tetrachloride	ND		1.0		ug/L			04/05/13 14:15	1
Chlorobenzene	ND		1.0		ug/L			04/05/13 14:15	1
Chlorobromomethane	ND		1.0		ug/L			04/05/13 14:15	1
Chlorodibromomethane	ND		0.50		ug/L			04/05/13 14:15	1
Chloroethane	ND		2.0		ug/L			04/05/13 14:15	1
Chloroform	ND		1.0		ug/L			04/05/13 14:15	1
Chloromethane	ND		2.0		ug/L			04/05/13 14:15	1
cis-1,2-Dichloroethene	**34**		1.0		ug/L			04/05/13 14:15	1
cis-1,3-Dichloropropene	ND		0.40		ug/L			04/05/13 14:15	1
Dichlorobromomethane	ND		0.50		ug/L			04/05/13 14:15	1
Dichlorodifluoromethane	ND		1.0		ug/L			04/05/13 14:15	1
Ethyl ether	ND		1.0		ug/L			04/05/13 14:15	1
Ethylbenzene	ND		1.0		ug/L			04/05/13 14:15	1
Ethylene Dibromide	ND		1.0		ug/L			04/05/13 14:15	1
Hexachlorobutadiene	ND		0.40		ug/L			04/05/13 14:15	1
Isopropyl ether	ND		10		ug/L			04/05/13 14:15	1
Isopropylbenzene	ND		1.0		ug/L			04/05/13 14:15	1
Methyl tert-butyl ether	ND		1.0		ug/L			04/05/13 14:15	1
Methylene Chloride	ND		1.0		ug/L			04/05/13 14:15	1
m-Xylene & p-Xylene	ND		2.0		ug/L			04/05/13 14:15	1
Naphthalene	ND		5.0		ug/L			04/05/13 14:15	1
n-Butylbenzene	ND		1.0		ug/L			04/05/13 14:15	1
N-Propylbenzene	ND		1.0		ug/L			04/05/13 14:15	1
o-Xylene	ND		1.0		ug/L			04/05/13 14:15	1
sec-Butylbenzene	ND		1.0		ug/L			04/05/13 14:15	1
Styrene	ND		1.0		ug/L			04/05/13 14:15	1
Tert-amyl methyl ether	ND		5.0		ug/L			04/05/13 14:15	1
Tert-butyl ethyl ether	ND		5.0		ug/L			04/05/13 14:15	1
tert-Butylbenzene	ND		1.0		ug/L			04/05/13 14:15	1
Tetrachloroethene	ND		1.0		ug/L			04/05/13 14:15	1
Tetrahydrofuran	ND		10		ug/L			04/05/13 14:15	1
Toluene	ND		1.0		ug/L			04/05/13 14:15	1

Client Sample ID: REW-9-2013 0328-01

Lab Sample ID: 480-35387-29

Date Collected: 03/28/13 10:30

Matrix: Water

Date Received: 04/02/13 01:40

Method: 8260C - Volatile Organic Compounds (GC/MS) (Continued)

Analyte	Result	Qualifier	RL	MDL	Unit	D	Prepared	Analyzed	Dil Fac
trans-1,2-Dichloroethene	ND		1.0		ug/L			04/05/13 14:15	1
trans-1,3-Dichloropropene	ND		0.40		ug/L			04/05/13 14:15	1
Trichloroethene	**7.9**		1.0		ug/L			04/05/13 14:15	1
Trichlorofluoromethane	ND		1.0		ug/L			04/05/13 14:15	1
Vinyl chloride	**4.2**		1.0		ug/L			04/05/13 14:15	1
Dibromomethane	ND		1.0		ug/L			04/05/13 14:15	1

Surrogate	*%Recovery*	*Qualifier*	*Limits*	*Prepared*	*Analyzed*	*Dil Fac*
Toluene-d8 (Surr)	*94*		*70 - 130*		*04/05/13 14:15*	*1*
1,2-Dichloroethane-d4 (Surr)	*84*		*70 - 130*		*04/05/13 14:15*	*1*
4-Bromofluorobenzene (Surr)	*102*		*70 - 130*		*04/05/13 14:15*	*1*

Client Sample ID: REW-10-2013 0328-01

Lab Sample ID: 480-35387-30

Date Collected: 03/28/13 09:45

Matrix: Water

Date Received: 04/02/13 01:40

Method: 8260C - Volatile Organic Compounds (GC/MS)

Analyte	Result	Qualifier	RL	MDL	Unit	D	Prepared	Analyzed	Dil Fac
1,1,1,2-Tetrachloroethane	ND		1.0		ug/L			04/05/13 14:39	1
1,1,1-Trichloroethane	ND		1.0		ug/L			04/05/13 14:39	1
1,1,2,2-Tetrachloroethane	ND		0.50		ug/L			04/05/13 14:39	1
1,1,2-Trichloroethane	ND		1.0		ug/L			04/05/13 14:39	1
1,1-Dichloroethane	ND		1.0		ug/L			04/05/13 14:39	1
1,1-Dichloroethene	ND		1.0		ug/L			04/05/13 14:39	1
1,1-Dichloropropene	ND		1.0		ug/L			04/05/13 14:39	1
1,2,3-Trichlorobenzene	ND		1.0		ug/L			04/05/13 14:39	1
1,2,3-Trichloropropane	ND		1.0		ug/L			04/05/13 14:39	1
1,2,4-Trichlorobenzene	ND		1.0		ug/L			04/05/13 14:39	1
1,2,4-Trimethylbenzene	ND		1.0		ug/L			04/05/13 14:39	1
1,2-Dibromo-3-Chloropropane	ND		5.0		ug/L			04/05/13 14:39	1
1,2-Dichlorobenzene	ND		1.0		ug/L			04/05/13 14:39	1
1,2-Dichloroethane	ND		1.0		ug/L			04/05/13 14:39	1
1,2-Dichloropropane	ND		1.0		ug/L			04/05/13 14:39	1
1,3,5-Trimethylbenzene	ND		1.0		ug/L			04/05/13 14:39	1
1,3-Dichlorobenzene	ND		1.0		ug/L			04/05/13 14:39	1
1,3-Dichloropropane	ND		1.0		ug/L			04/05/13 14:39	1
1,4-Dichlorobenzene	ND		1.0		ug/L			04/05/13 14:39	1
1,4-Dioxane	ND		50		ug/L			04/05/13 14:39	1
2,2-Dichloropropane	ND		1.0		ug/L			04/05/13 14:39	1
2-Butanone (MEK)	ND		10		ug/L			04/05/13 14:39	1
2-Chlorotoluene	ND		1.0		ug/L			04/05/13 14:39	1
2-Hexanone	ND		10		ug/L			04/05/13 14:39	1
4-Chlorotoluene	ND		1.0		ug/L			04/05/13 14:39	1
4-Isopropyltoluene	ND		1.0		ug/L			04/05/13 14:39	1
4-Methyl-2-pentanone (MIBK)	ND		10		ug/L			04/05/13 14:39	1
Acetone	ND		50		ug/L			04/05/13 14:39	1
Benzene	ND		1.0		ug/L			04/05/13 14:39	1
Bromobenzene	ND		1.0		ug/L			04/05/13 14:39	1
Bromoform	ND		1.0		ug/L			04/05/13 14:39	1
Bromomethane	ND		2.0		ug/L			04/05/13 14:39	1

Client Sample ID: REW-10-2013 0328-01
Date Collected: 03/28/13 09:45
Date Received: 04/02/13 01:40

Lab Sample ID: 480-35387-30
Matrix: Water

Method: 8260C - Volatile Organic Compounds (GC/MS) (Continued)

Analyte	Result	Qualifier	RL	MDL	Unit	D	Prepared	Analyzed	Dil Fac
Carbon disulfide	ND		10		ug/L			04/05/13 14:39	1
Carbon tetrachloride	ND		1.0		ug/L			04/05/13 14:39	1
Chlorobenzene	ND		1.0		ug/L			04/05/13 14:39	1
Chlorobromomethane	ND		1.0		ug/L			04/05/13 14:39	1
Chlorodibromomethane	ND		0.50		ug/L			04/05/13 14:39	1
Chloroethane	ND		2.0		ug/L			04/05/13 14:39	1
Chloroform	ND		1.0		ug/L			04/05/13 14:39	1
Chloromethane	ND		2.0		ug/L			04/05/13 14:39	1
cis-1,2-Dichloroethene	**10**		1.0		ug/L			04/05/13 14:39	1
cis-1,3-Dichloropropene	ND		0.40		ug/L			04/05/13 14:39	1
Dichlorobromomethane	ND		0.50		ug/L			04/05/13 14:39	1
Dichlorodifluoromethane	ND		1.0		ug/L			04/05/13 14:39	1
Ethyl ether	ND		1.0		ug/L			04/05/13 14:39	1
Ethylbenzene	ND		1.0		ug/L			04/05/13 14:39	1
Ethylene Dibromide	ND		1.0		ug/L			04/05/13 14:39	1
Hexachlorobutadiene	ND		0.40		ug/L			04/05/13 14:39	1
Isopropyl ether	ND		10		ug/L			04/05/13 14:39	1
Isopropylbenzene	ND		1.0		ug/L			04/05/13 14:39	1
Methyl tert-butyl ether	ND		1.0		ug/L			04/05/13 14:39	1
Methylene Chloride	ND		1.0		ug/L			04/05/13 14:39	1
m-Xylene & p-Xylene	ND		2.0		ug/L			04/05/13 14:39	1
Naphthalene	ND		5.0		ug/L			04/05/13 14:39	1
n-Butylbenzene	ND		1.0		ug/L			04/05/13 14:39	1
N-Propylbenzene	ND		1.0		ug/L			04/05/13 14:39	1
o-Xylene	ND		1.0		ug/L			04/05/13 14:39	1
sec-Butylbenzene	ND		1.0		ug/L			04/05/13 14:39	1
Styrene	ND		1.0		ug/L			04/05/13 14:39	1
Tert-amyl methyl ether	ND		5.0		ug/L			04/05/13 14:39	1
Tert-butyl ethyl ether	ND		5.0		ug/L			04/05/13 14:39	1
tert-Butylbenzene	ND		1.0		ug/L			04/05/13 14:39	1
Tetrachloroethene	ND		1.0		ug/L			04/05/13 14:39	1
Tetrahydrofuran	ND		10		ug/L			04/05/13 14:39	1
Toluene	ND		1.0		ug/L			04/05/13 14:39	1
trans-1,2-Dichloroethene	ND		1.0		ug/L			04/05/13 14:39	1
trans-1,3-Dichloropropene	ND		0.40		ug/L			04/05/13 14:39	1
Trichloroethene	**3.5**		1.0		ug/L			04/05/13 14:39	1
Trichlorofluoromethane	ND		1.0		ug/L			04/05/13 14:39	1
Vinyl chloride	ND		1.0		ug/L			04/05/13 14:39	1
Dibromomethane	ND		1.0		ug/L			04/05/13 14:39	1

Surrogate	*%Recovery*	*Qualifier*	*Limits*	*Prepared*	*Analyzed*	*Dil Fac*
Toluene-d8 (Surr)	*95*		*70 - 130*		*04/05/13 14:39*	*1*
1,2-Dichloroethane-d4 (Surr)	*87*		*70 - 130*		*04/05/13 14:39*	*1*
4-Bromofluorobenzene (Surr)	*104*		*70 - 130*		*04/05/13 14:39*	*1*

Client: Innovative Engineering Solutions, Inc
Project/Site: IDS Wayland

TestAmerica Job ID: 480-35387-1

Client Sample ID: REW-11-2013 0329-01
Date Collected: 03/29/13 08:05
Date Received: 04/02/13 01:40

Lab Sample ID: 480-35387-31
Matrix: Water

Method: 8260C - Volatile Organic Compounds (GC/MS)

Analyte	Result	Qualifier	RL	MDL	Unit	D	Prepared	Analyzed	Dil Fac
1,1,1,2-Tetrachloroethane	ND		1.0		ug/L			04/05/13 15:03	1
1,1,1-Trichloroethane	ND		1.0		ug/L			04/05/13 15:03	1
1,1,2,2-Tetrachloroethane	ND		0.50		ug/L			04/05/13 15:03	1
1,1,2-Trichloroethane	ND		1.0		ug/L			04/05/13 15:03	1
1,1-Dichloroethane	**4.8**		1.0		ug/L			04/05/13 15:03	1
1,1-Dichloroethene	**2.1**		1.0		ug/L			04/05/13 15:03	1
1,1-Dichloropropene	ND		1.0		ug/L			04/05/13 15:03	1
1,2,3-Trichlorobenzene	ND		1.0		ug/L			04/05/13 15:03	1
1,2,3-Trichloropropane	ND		1.0		ug/L			04/05/13 15:03	1
1,2,4-Trichlorobenzene	ND		1.0		ug/L			04/05/13 15:03	1
1,2,4-Trimethylbenzene	**1.1**		1.0		ug/L			04/05/13 15:03	1
1,2-Dibromo-3-Chloropropane	ND		5.0		ug/L			04/05/13 15:03	1
1,2-Dichlorobenzene	ND		1.0		ug/L			04/05/13 15:03	1
1,2-Dichloroethane	ND		1.0		ug/L			04/05/13 15:03	1
1,2-Dichloropropane	ND		1.0		ug/L			04/05/13 15:03	1
1,3,5-Trimethylbenzene	ND		1.0		ug/L			04/05/13 15:03	1
1,3-Dichlorobenzene	ND		1.0		ug/L			04/05/13 15:03	1
1,3-Dichloropropane	ND		1.0		ug/L			04/05/13 15:03	1
1,4-Dichlorobenzene	ND		1.0		ug/L			04/05/13 15:03	1
1,4-Dioxane	ND		50		ug/L			04/05/13 15:03	1
2,2-Dichloropropane	ND		1.0		ug/L			04/05/13 15:03	1
2-Butanone (MEK)	ND		10		ug/L			04/05/13 15:03	1
2-Chlorotoluene	ND		1.0		ug/L			04/05/13 15:03	1
2-Hexanone	ND		10		ug/L			04/05/13 15:03	1
4-Chlorotoluene	ND		1.0		ug/L			04/05/13 15:03	1
4-Isopropyltoluene	ND		1.0		ug/L			04/05/13 15:03	1
4-Methyl-2-pentanone (MIBK)	ND		10		ug/L			04/05/13 15:03	1
Acetone	ND		50		ug/L			04/05/13 15:03	1
Benzene	**1.4**		1.0		ug/L			04/05/13 15:03	1
Bromobenzene	ND		1.0		ug/L			04/05/13 15:03	1
Bromoform	ND		1.0		ug/L			04/05/13 15:03	1
Bromomethane	ND		2.0		ug/L			04/05/13 15:03	1
Carbon disulfide	ND		10		ug/L			04/05/13 15:03	1
Carbon tetrachloride	ND		1.0		ug/L			04/05/13 15:03	1
Chlorobenzene	ND		1.0		ug/L			04/05/13 15:03	1
Chlorobromomethane	ND		1.0		ug/L			04/05/13 15:03	1
Chlorodibromomethane	ND		0.50		ug/L			04/05/13 15:03	1
Chloroethane	ND		2.0		ug/L			04/05/13 15:03	1
Chloroform	ND		1.0		ug/L			04/05/13 15:03	1
Chloromethane	ND		2.0		ug/L			04/05/13 15:03	1
cis-1,3-Dichloropropene	ND		0.40		ug/L			04/05/13 15:03	1
Dichlorobromomethane	ND		0.50		ug/L			04/05/13 15:03	1
Dichlorodifluoromethane	ND		1.0		ug/L			04/05/13 15:03	1
Ethyl ether	ND		1.0		ug/L			04/05/13 15:03	1
Ethylbenzene	ND		1.0		ug/L			04/05/13 15:03	1
Ethylene Dibromide	ND		1.0		ug/L			04/05/13 15:03	1
Hexachlorobutadiene	ND		0.40		ug/L			04/05/13 15:03	1
Isopropyl ether	ND		10		ug/L			04/05/13 15:03	1
Isopropylbenzene	ND		1.0		ug/L			04/05/13 15:03	1

Client Sample ID: REW-11-2013 0329-01

Lab Sample ID: 480-35387-31

Date Collected: 03/29/13 08:05

Matrix: Water

Date Received: 04/02/13 01:40

Method: 8260C - Volatile Organic Compounds (GC/MS) (Continued)

Analyte	Result	Qualifier	RL	MDL	Unit	D	Prepared	Analyzed	Dil Fac
Methyl tert-butyl ether	ND		1.0		ug/L			04/05/13 15:03	1
Methylene Chloride	ND		1.0		ug/L			04/05/13 15:03	1
m-Xylene & p-Xylene	ND		2.0		ug/L			04/05/13 15:03	1
Naphthalene	ND		5.0		ug/L			04/05/13 15:03	1
n-Butylbenzene	ND		1.0		ug/L			04/05/13 15:03	1
N-Propylbenzene	ND		1.0		ug/L			04/05/13 15:03	1
o-Xylene	**1.7**		1.0		ug/L			04/05/13 15:03	1
sec-Butylbenzene	ND		1.0		ug/L			04/05/13 15:03	1
Styrene	ND		1.0		ug/L			04/05/13 15:03	1
Tert-amyl methyl ether	ND		5.0		ug/L			04/05/13 15:03	1
Tert-butyl ethyl ether	ND		5.0		ug/L			04/05/13 15:03	1
tert-Butylbenzene	ND		1.0		ug/L			04/05/13 15:03	1
Tetrachloroethene	**22**		1.0		ug/L			04/05/13 15:03	1
Tetrahydrofuran	ND		10		ug/L			04/05/13 15:03	1
Toluene	ND		1.0		ug/L			04/05/13 15:03	1
trans-1,2-Dichloroethene	**2.7**		1.0		ug/L			04/05/13 15:03	1
trans-1,3-Dichloropropene	ND		0.40		ug/L			04/05/13 15:03	1
Trichlorofluoromethane	ND		1.0		ug/L			04/05/13 15:03	1
Vinyl chloride	**45**		1.0		ug/L			04/05/13 15:03	1
Dibromomethane	ND		1.0		ug/L			04/05/13 15:03	1

Surrogate	*%Recovery*	*Qualifier*	*Limits*	*Prepared*	*Analyzed*	*Dil Fac*
Toluene-d8 (Surr)	*95*		*70 - 130*		*04/05/13 15:03*	*1*
1,2-Dichloroethane-d4 (Surr)	*85*		*70 - 130*		*04/05/13 15:03*	*1*
4-Bromofluorobenzene (Surr)	*102*		*70 - 130*		*04/05/13 15:03*	*1*

Method: 8260C - Volatile Organic Compounds (GC/MS) - DL

Analyte	Result	Qualifier	RL	MDL	Unit	D	Prepared	Analyzed	Dil Fac
cis-1,2-Dichloroethene	**1400**		25		ug/L			04/06/13 00:14	25
Trichloroethene	**410**		25		ug/L			04/06/13 00:14	25

Surrogate	*%Recovery*	*Qualifier*	*Limits*	*Prepared*	*Analyzed*	*Dil Fac*
Toluene-d8 (Surr)	*96*		*70 - 130*		*04/06/13 00:14*	*25*
1,2-Dichloroethane-d4 (Surr)	*83*		*70 - 130*		*04/06/13 00:14*	*25*
4-Bromofluorobenzene (Surr)	*105*		*70 - 130*		*04/06/13 00:14*	*25*

Client Sample ID: REW-12-2013 0328-01

Lab Sample ID: 480-35387-32

Date Collected: 03/28/13 11:50

Matrix: Water

Date Received: 04/02/13 01:40

Method: 8260C - Volatile Organic Compounds (GC/MS)

Analyte	Result	Qualifier	RL	MDL	Unit	D	Prepared	Analyzed	Dil Fac
1,1,1,2-Tetrachloroethane	ND		1.0		ug/L			04/05/13 15:26	1
1,1,1-Trichloroethane	ND		1.0		ug/L			04/05/13 15:26	1
1,1,2,2-Tetrachloroethane	ND		0.50		ug/L			04/05/13 15:26	1
1,1,2-Trichloroethane	ND		1.0		ug/L			04/05/13 15:26	1
1,1-Dichloroethane	**1.3**		1.0		ug/L			04/05/13 15:26	1
1,1-Dichloroethene	ND		1.0		ug/L			04/05/13 15:26	1
1,1-Dichloropropene	ND		1.0		ug/L			04/05/13 15:26	1
1,2,3-Trichlorobenzene	ND		1.0		ug/L			04/05/13 15:26	1

Client Sample ID: REW-12-2013 0328-01
Date Collected: 03/28/13 11:50
Date Received: 04/02/13 01:40

Lab Sample ID: 480-35387-32
Matrix: Water

Method: 8260C - Volatile Organic Compounds (GC/MS) (Continued)

Analyte	Result	Qualifier	RL	MDL	Unit	D	Prepared	Analyzed	Dil Fac
1,2,3-Trichloropropane	ND		1.0		ug/L			04/05/13 15:26	1
1,2,4-Trichlorobenzene	ND		1.0		ug/L			04/05/13 15:26	1
1,2,4-Trimethylbenzene	ND		1.0		ug/L			04/05/13 15:26	1
1,2-Dibromo-3-Chloropropane	ND		5.0		ug/L			04/05/13 15:26	1
1,2-Dichlorobenzene	ND		1.0		ug/L			04/05/13 15:26	1
1,2-Dichloroethane	ND		1.0		ug/L			04/05/13 15:26	1
1,2-Dichloropropane	ND		1.0		ug/L			04/05/13 15:26	1
1,3,5-Trimethylbenzene	ND		1.0		ug/L			04/05/13 15:26	1
1,3-Dichlorobenzene	ND		1.0		ug/L			04/05/13 15:26	1
1,3-Dichloropropane	ND		1.0		ug/L			04/05/13 15:26	1
1,4-Dichlorobenzene	ND		1.0		ug/L			04/05/13 15:26	1
1,4-Dioxane	ND		50		ug/L			04/05/13 15:26	1
2,2-Dichloropropane	ND		1.0		ug/L			04/05/13 15:26	1
2-Butanone (MEK)	ND		10		ug/L			04/05/13 15:26	1
2-Chlorotoluene	ND		1.0		ug/L			04/05/13 15:26	1
2-Hexanone	ND		10		ug/L			04/05/13 15:26	1
4-Chlorotoluene	ND		1.0		ug/L			04/05/13 15:26	1
4-Isopropyltoluene	ND		1.0		ug/L			04/05/13 15:26	1
4-Methyl-2-pentanone (MIBK)	ND		10		ug/L			04/05/13 15:26	1
Acetone	ND		50		ug/L			04/05/13 15:26	1
Benzene	ND		1.0		ug/L			04/05/13 15:26	1
Bromobenzene	ND		1.0		ug/L			04/05/13 15:26	1
Bromoform	ND		1.0		ug/L			04/05/13 15:26	1
Bromomethane	ND		2.0		ug/L			04/05/13 15:26	1
Carbon disulfide	ND		10		ug/L			04/05/13 15:26	1
Carbon tetrachloride	ND		1.0		ug/L			04/05/13 15:26	1
Chlorobenzene	ND		1.0		ug/L			04/05/13 15:26	1
Chlorobromomethane	ND		1.0		ug/L			04/05/13 15:26	1
Chlorodibromomethane	ND		0.50		ug/L			04/05/13 15:26	1
Chloroethane	ND		2.0		ug/L			04/05/13 15:26	1
Chloroform	ND		1.0		ug/L			04/05/13 15:26	1
Chloromethane	ND		2.0		ug/L			04/05/13 15:26	1
cis-1,3-Dichloropropene	ND		0.40		ug/L			04/05/13 15:26	1
Dichlorobromomethane	ND		0.50		ug/L			04/05/13 15:26	1
Dichlorodifluoromethane	ND		1.0		ug/L			04/05/13 15:26	1
Ethyl ether	ND		1.0		ug/L			04/05/13 15:26	1
Ethylbenzene	ND		1.0		ug/L			04/05/13 15:26	1
Ethylene Dibromide	ND		1.0		ug/L			04/05/13 15:26	1
Hexachlorobutadiene	ND		0.40		ug/L			04/05/13 15:26	1
Isopropyl ether	ND		10		ug/L			04/05/13 15:26	1
Isopropylbenzene	ND		1.0		ug/L			04/05/13 15:26	1
Methyl tert-butyl ether	ND		1.0		ug/L			04/05/13 15:26	1
Methylene Chloride	ND		1.0		ug/L			04/05/13 15:26	1
m-Xylene & p-Xylene	ND		2.0		ug/L			04/05/13 15:26	1
Naphthalene	ND		5.0		ug/L			04/05/13 15:26	1
n-Butylbenzene	ND		1.0		ug/L			04/05/13 15:26	1
N-Propylbenzene	ND		1.0		ug/L			04/05/13 15:26	1
o-Xylene	ND		1.0		ug/L			04/05/13 15:26	1
sec-Butylbenzene	ND		1.0		ug/L			04/05/13 15:26	1

Client Sample ID: REW-12-2013 0328-01

Lab Sample ID: 480-35387-32

Date Collected: 03/28/13 11:50

Matrix: Water

Date Received: 04/02/13 01:40

Method: 8260C - Volatile Organic Compounds (GC/MS) (Continued)

Analyte	Result	Qualifier	RL	MDL	Unit	D	Prepared	Analyzed	Dil Fac
Styrene	ND		1.0		ug/L			04/05/13 15:26	1
Tert-amyl methyl ether	ND		5.0		ug/L			04/05/13 15:26	1
Tert-butyl ethyl ether	ND		5.0		ug/L			04/05/13 15:26	1
tert-Butylbenzene	ND		1.0		ug/L			04/05/13 15:26	1
Tetrachloroethene	**10**		1.0		ug/L			04/05/13 15:26	1
Tetrahydrofuran	ND		10		ug/L			04/05/13 15:26	1
Toluene	ND		1.0		ug/L			04/05/13 15:26	1
trans-1,2-Dichloroethene	**1.0**		1.0		ug/L			04/05/13 15:26	1
trans-1,3-Dichloropropene	ND		0.40		ug/L			04/05/13 15:26	1
Trichlorofluoromethane	ND		1.0		ug/L			04/05/13 15:26	1
Vinyl chloride	**23**		1.0		ug/L			04/05/13 15:26	1
Dibromomethane	ND		1.0		ug/L			04/05/13 15:26	1

Surrogate	*%Recovery*	*Qualifier*	*Limits*	*Prepared*	*Analyzed*	*Dil Fac*
Toluene-d8 (Surr)	*96*		*70 - 130*		*04/05/13 15:26*	*1*
1,2-Dichloroethane-d4 (Surr)	*88*		*70 - 130*		*04/05/13 15:26*	*1*
4-Bromofluorobenzene (Surr)	*103*		*70 - 130*		*04/05/13 15:26*	*1*

Method: 8260C - Volatile Organic Compounds (GC/MS) - DL

Analyte	Result	Qualifier	RL	MDL	Unit	D	Prepared	Analyzed	Dil Fac
cis-1,2-Dichloroethene	**280**		4.0		ug/L			04/06/13 00:38	4
Trichloroethene	**180**		4.0		ug/L			04/06/13 00:38	4

Surrogate	*%Recovery*	*Qualifier*	*Limits*	*Prepared*	*Analyzed*	*Dil Fac*
Toluene-d8 (Surr)	*95*		*70 - 130*		*04/06/13 00:38*	*4*
1,2-Dichloroethane-d4 (Surr)	*86*		*70 - 130*		*04/06/13 00:38*	*4*
4-Bromofluorobenzene (Surr)	*104*		*70 - 130*		*04/06/13 00:38*	*4*

Client Sample ID: DUPX1-2013 0328-01

Lab Sample ID: 480-35387-33

Date Collected: 03/28/13 00:00

Matrix: Water

Date Received: 04/02/13 01:40

Method: 8260C - Volatile Organic Compounds (GC/MS)

Analyte	Result	Qualifier	RL	MDL	Unit	D	Prepared	Analyzed	Dil Fac
1,1,1,2-Tetrachloroethane	ND		5.0		ug/L			04/06/13 01:02	5
1,1,1-Trichloroethane	ND		5.0		ug/L			04/06/13 01:02	5
1,1,2,2-Tetrachloroethane	ND		2.5		ug/L			04/06/13 01:02	5
1,1,2-Trichloroethane	ND		5.0		ug/L			04/06/13 01:02	5
1,1-Dichloroethane	ND		5.0		ug/L			04/06/13 01:02	5
1,1-Dichloroethene	ND		5.0		ug/L			04/06/13 01:02	5
1,1-Dichloropropene	ND		5.0		ug/L			04/06/13 01:02	5
1,2,3-Trichlorobenzene	ND		5.0		ug/L			04/06/13 01:02	5
1,2,3-Trichloropropane	ND		5.0		ug/L			04/06/13 01:02	5
1,2,4-Trichlorobenzene	ND		5.0		ug/L			04/06/13 01:02	5
1,2,4-Trimethylbenzene	ND		5.0		ug/L			04/06/13 01:02	5
1,2-Dibromo-3-Chloropropane	ND		25		ug/L			04/06/13 01:02	5
1,2-Dichlorobenzene	ND		5.0		ug/L			04/06/13 01:02	5
1,2-Dichloroethane	ND		5.0		ug/L			04/06/13 01:02	5
1,2-Dichloropropane	ND		5.0		ug/L			04/06/13 01:02	5
1,3,5-Trimethylbenzene	ND		5.0		ug/L			04/06/13 01:02	5

Client Sample ID: DUPX1-2013 0328-01

Lab Sample ID: 480-35387-33

Date Collected: 03/28/13 00:00

Matrix: Water

Date Received: 04/02/13 01:40

Method: 8260C - Volatile Organic Compounds (GC/MS) (Continued)

Analyte	Result	Qualifier	RL	MDL	Unit	D	Prepared	Analyzed	Dil Fac
1,3-Dichlorobenzene	ND		5.0		ug/L			04/06/13 01:02	5
1,3-Dichloropropane	ND		5.0		ug/L			04/06/13 01:02	5
1,4-Dichlorobenzene	ND		5.0		ug/L			04/06/13 01:02	5
1,4-Dioxane	ND		250		ug/L			04/06/13 01:02	5
2,2-Dichloropropane	ND		5.0		ug/L			04/06/13 01:02	5
2-Butanone (MEK)	ND		50		ug/L			04/06/13 01:02	5
2-Chlorotoluene	ND		5.0		ug/L			04/06/13 01:02	5
2-Hexanone	ND		50		ug/L			04/06/13 01:02	5
4-Chlorotoluene	ND		5.0		ug/L			04/06/13 01:02	5
4-Isopropyltoluene	ND		5.0		ug/L			04/06/13 01:02	5
4-Methyl-2-pentanone (MIBK)	ND		50		ug/L			04/06/13 01:02	5
Acetone	ND	*	250		ug/L			04/06/13 01:02	5
Benzene	ND		5.0		ug/L			04/06/13 01:02	5
Bromobenzene	ND		5.0		ug/L			04/06/13 01:02	5
Bromoform	ND		5.0		ug/L			04/06/13 01:02	5
Bromomethane	ND		10		ug/L			04/06/13 01:02	5
Carbon disulfide	ND		50		ug/L			04/06/13 01:02	5
Carbon tetrachloride	ND		5.0		ug/L			04/06/13 01:02	5
Chlorobenzene	ND		5.0		ug/L			04/06/13 01:02	5
Chlorobromomethane	ND		5.0		ug/L			04/06/13 01:02	5
Chlorodibromomethane	ND		2.5		ug/L			04/06/13 01:02	5
Chloroethane	ND		10		ug/L			04/06/13 01:02	5
Chloroform	ND		5.0		ug/L			04/06/13 01:02	5
Chloromethane	ND		10		ug/L			04/06/13 01:02	5
cis-1,2-Dichloroethene	**390**		5.0		ug/L			04/06/13 01:02	5
cis-1,3-Dichloropropene	ND		2.0		ug/L			04/06/13 01:02	5
Dichlorobromomethane	ND		2.5		ug/L			04/06/13 01:02	5
Dichlorodifluoromethane	ND	*	5.0		ug/L			04/06/13 01:02	5
Ethyl ether	ND		5.0		ug/L			04/06/13 01:02	5
Ethylbenzene	ND		5.0		ug/L			04/06/13 01:02	5
Ethylene Dibromide	ND		5.0		ug/L			04/06/13 01:02	5
Hexachlorobutadiene	ND		2.0		ug/L			04/06/13 01:02	5
Isopropyl ether	ND		50		ug/L			04/06/13 01:02	5
Isopropylbenzene	ND		5.0		ug/L			04/06/13 01:02	5
Methyl tert-butyl ether	ND		5.0		ug/L			04/06/13 01:02	5
Methylene Chloride	ND		5.0		ug/L			04/06/13 01:02	5
m-Xylene & p-Xylene	ND		10		ug/L			04/06/13 01:02	5
Naphthalene	ND		25		ug/L			04/06/13 01:02	5
n-Butylbenzene	ND		5.0		ug/L			04/06/13 01:02	5
N-Propylbenzene	ND		5.0		ug/L			04/06/13 01:02	5
o-Xylene	ND		5.0		ug/L			04/06/13 01:02	5
sec-Butylbenzene	ND		5.0		ug/L			04/06/13 01:02	5
Styrene	ND		5.0		ug/L			04/06/13 01:02	5
Tert-amyl methyl ether	ND		25		ug/L			04/06/13 01:02	5
Tert-butyl ethyl ether	ND		25		ug/L			04/06/13 01:02	5
tert-Butylbenzene	ND		5.0		ug/L			04/06/13 01:02	5
Tetrachloroethene	ND		5.0		ug/L			04/06/13 01:02	5
Tetrahydrofuran	ND		50		ug/L			04/06/13 01:02	5
Toluene	ND		5.0		ug/L			04/06/13 01:02	5

Client Sample ID: DUPX1-2013 0328-01

Lab Sample ID: 480-35387-33

Date Collected: 03/28/13 00:00

Matrix: Water

Date Received: 04/02/13 01:40

Method: 8260C - Volatile Organic Compounds (GC/MS) (Continued)

Analyte	Result	Qualifier	RL	MDL	Unit	D	Prepared	Analyzed	Dil Fac
trans-1,2-Dichloroethene	**7.9**		5.0		ug/L			04/06/13 01:02	5
trans-1,3-Dichloropropene	ND		2.0		ug/L			04/06/13 01:02	5
Trichloroethene	**280**		5.0		ug/L			04/06/13 01:02	5
Trichlorofluoromethane	ND		5.0		ug/L			04/06/13 01:02	5
Vinyl chloride	**70**		5.0		ug/L			04/06/13 01:02	5
Dibromomethane	ND		5.0		ug/L			04/06/13 01:02	5

Surrogate	*%Recovery*	*Qualifier*	*Limits*	*Prepared*	*Analyzed*	*Dil Fac*
Toluene-d8 (Surr)	*95*		*70 - 130*		*04/06/13 01:02*	*5*
1,2-Dichloroethane-d4 (Surr)	*84*		*70 - 130*		*04/06/13 01:02*	*5*
4-Bromofluorobenzene (Surr)	*104*		*70 - 130*		*04/06/13 01:02*	*5*

Client Sample ID: DUPX2-2013 0329-01

Lab Sample ID: 480-35387-34

Date Collected: 03/29/13 00:00

Matrix: Water

Date Received: 04/02/13 01:40

Method: 8260B SIM - Volatile Organic Compounds (GC/MS)

Analyte	Result	Qualifier	RL	MDL	Unit	D	Prepared	Analyzed	Dil Fac
1,4-Dioxane	**6.0**		1.6		ug/L			04/03/13 19:09	1

Surrogate	*%Recovery*	*Qualifier*	*Limits*	*Prepared*	*Analyzed*	*Dil Fac*
Dibromofluoromethane (Surr)	*107*		*50 - 150*		*04/03/13 19:09*	*1*
TBA-d9 (Surr)	*112*		*50 - 150*		*04/03/13 19:09*	*1*

Method: 8260C - Volatile Organic Compounds (GC/MS)

Analyte	Result	Qualifier	RL	MDL	Unit	D	Prepared	Analyzed	Dil Fac
1,1,1,2-Tetrachloroethane	ND		1.0		ug/L			04/06/13 01:26	1
1,1,1-Trichloroethane	ND		1.0		ug/L			04/06/13 01:26	1
1,1,2,2-Tetrachloroethane	ND		0.50		ug/L			04/06/13 01:26	1
1,1,2-Trichloroethane	ND		1.0		ug/L			04/06/13 01:26	1
1,1-Dichloroethane	ND		1.0		ug/L			04/06/13 01:26	1
1,1-Dichloroethene	ND		1.0		ug/L			04/06/13 01:26	1
1,1-Dichloropropene	ND		1.0		ug/L			04/06/13 01:26	1
1,2,3-Trichlorobenzene	ND		1.0		ug/L			04/06/13 01:26	1
1,2,3-Trichloropropane	ND		1.0		ug/L			04/06/13 01:26	1
1,2,4-Trichlorobenzene	ND		1.0		ug/L			04/06/13 01:26	1
1,2,4-Trimethylbenzene	ND		1.0		ug/L			04/06/13 01:26	1
1,2-Dibromo-3-Chloropropane	ND		5.0		ug/L			04/06/13 01:26	1
1,2-Dichlorobenzene	ND		1.0		ug/L			04/06/13 01:26	1
1,2-Dichloroethane	ND		1.0		ug/L			04/06/13 01:26	1
1,2-Dichloropropane	ND		1.0		ug/L			04/06/13 01:26	1
1,3,5-Trimethylbenzene	ND		1.0		ug/L			04/06/13 01:26	1
1,3-Dichlorobenzene	ND		1.0		ug/L			04/06/13 01:26	1
1,3-Dichloropropane	ND		1.0		ug/L			04/06/13 01:26	1
1,4-Dichlorobenzene	ND		1.0		ug/L			04/06/13 01:26	1
1,4-Dioxane	ND		50		ug/L			04/06/13 01:26	1
2,2-Dichloropropane	ND		1.0		ug/L			04/06/13 01:26	1
2-Butanone (MEK)	ND		10		ug/L			04/06/13 01:26	1
2-Chlorotoluene	ND		1.0		ug/L			04/06/13 01:26	1
2-Hexanone	ND		10		ug/L			04/06/13 01:26	1

Client Sample ID: DUPX2-2013 0329-01

Lab Sample ID: 480-35387-34

Date Collected: 03/29/13 00:00

Matrix: Water

Date Received: 04/02/13 01:40

Method: 8260C - Volatile Organic Compounds (GC/MS) (Continued)

Analyte	Result	Qualifier	RL	MDL	Unit	D	Prepared	Analyzed	Dil Fac
4-Chlorotoluene	ND		1.0		ug/L			04/06/13 01:26	1
4-Isopropyltoluene	ND		1.0		ug/L			04/06/13 01:26	1
4-Methyl-2-pentanone (MIBK)	ND		10		ug/L			04/06/13 01:26	1
Acetone	ND	*	50		ug/L			04/06/13 01:26	1
Benzene	ND		1.0		ug/L			04/06/13 01:26	1
Bromobenzene	ND		1.0		ug/L			04/06/13 01:26	1
Bromoform	ND		1.0		ug/L			04/06/13 01:26	1
Bromomethane	ND		2.0		ug/L			04/06/13 01:26	1
Carbon disulfide	ND		10		ug/L			04/06/13 01:26	1
Carbon tetrachloride	ND		1.0		ug/L			04/06/13 01:26	1
Chlorobenzene	ND		1.0		ug/L			04/06/13 01:26	1
Chlorobromomethane	ND		1.0		ug/L			04/06/13 01:26	1
Chlorodibromomethane	ND		0.50		ug/L			04/06/13 01:26	1
Chloroethane	ND		2.0		ug/L			04/06/13 01:26	1
Chloroform	ND		1.0		ug/L			04/06/13 01:26	1
Chloromethane	ND		2.0		ug/L			04/06/13 01:26	1
cis-1,2-Dichloroethene	**9.2**		1.0		ug/L			04/06/13 01:26	1
cis-1,3-Dichloropropene	ND		0.40		ug/L			04/06/13 01:26	1
Dichlorobromomethane	ND		0.50		ug/L			04/06/13 01:26	1
Dichlorodifluoromethane	ND	*	1.0		ug/L			04/06/13 01:26	1
Ethyl ether	ND		1.0		ug/L			04/06/13 01:26	1
Ethylbenzene	ND		1.0		ug/L			04/06/13 01:26	1
Ethylene Dibromide	ND		1.0		ug/L			04/06/13 01:26	1
Hexachlorobutadiene	ND		0.40		ug/L			04/06/13 01:26	1
Isopropyl ether	ND		10		ug/L			04/06/13 01:26	1
Isopropylbenzene	ND		1.0		ug/L			04/06/13 01:26	1
Methyl tert-butyl ether	ND		1.0		ug/L			04/06/13 01:26	1
Methylene Chloride	ND		1.0		ug/L			04/06/13 01:26	1
m-Xylene & p-Xylene	ND		2.0		ug/L			04/06/13 01:26	1
Naphthalene	ND		5.0		ug/L			04/06/13 01:26	1
n-Butylbenzene	ND		1.0		ug/L			04/06/13 01:26	1
N-Propylbenzene	ND		1.0		ug/L			04/06/13 01:26	1
o-Xylene	ND		1.0		ug/L			04/06/13 01:26	1
sec-Butylbenzene	ND		1.0		ug/L			04/06/13 01:26	1
Styrene	ND		1.0		ug/L			04/06/13 01:26	1
Tert-amyl methyl ether	ND		5.0		ug/L			04/06/13 01:26	1
Tert-butyl ethyl ether	ND		5.0		ug/L			04/06/13 01:26	1
tert-Butylbenzene	ND		1.0		ug/L			04/06/13 01:26	1
Tetrachloroethene	ND		1.0		ug/L			04/06/13 01:26	1
Tetrahydrofuran	ND		10		ug/L			04/06/13 01:26	1
Toluene	ND		1.0		ug/L			04/06/13 01:26	1
trans-1,2-Dichloroethene	ND		1.0		ug/L			04/06/13 01:26	1
trans-1,3-Dichloropropene	ND		0.40		ug/L			04/06/13 01:26	1
Trichloroethene	**27**		1.0		ug/L			04/06/13 01:26	1
Trichlorofluoromethane	ND		1.0		ug/L			04/06/13 01:26	1
Vinyl chloride	ND		1.0		ug/L			04/06/13 01:26	1
Dibromomethane	ND		1.0		ug/L			04/06/13 01:26	1

Surrogate	*%Recovery*	*Qualifier*	*Limits*	*Prepared*	*Analyzed*	*Dil Fac*
Toluene-d8 (Surr)	*96*		*70 - 130*		*04/06/13 01:26*	*1*

Client Sample ID: DUPX2-2013 0329-01

Lab Sample ID: 480-35387-34

Date Collected: 03/29/13 00:00

Matrix: Water

Date Received: 04/02/13 01:40

Method: 8260C - Volatile Organic Compounds (GC/MS) (Continued)

Surrogate	%Recovery	Qualifier	Limits	Prepared	Analyzed	Dil Fac
1,2-Dichloroethane-d4 (Surr)	85		70 - 130		04/06/13 01:26	1
4-Bromofluorobenzene (Surr)	104		70 - 130		04/06/13 01:26	1

Client Sample ID: DUPX3-2013 0401-01

Lab Sample ID: 480-35387-35

Date Collected: 04/01/13 00:00

Matrix: Water

Date Received: 04/02/13 01:40

Method: 8260C - Volatile Organic Compounds (GC/MS)

Analyte	Result	Qualifier	RL	MDL	Unit	D	Prepared	Analyzed	Dil Fac
1,1,1,2-Tetrachloroethane	ND		1.0		ug/L			04/06/13 01:50	1
1,1,1-Trichloroethane	ND		1.0		ug/L			04/06/13 01:50	1
1,1,2,2-Tetrachloroethane	ND		0.50		ug/L			04/06/13 01:50	1
1,1,2-Trichloroethane	ND		1.0		ug/L			04/06/13 01:50	1
1,1-Dichloroethane	ND		1.0		ug/L			04/06/13 01:50	1
1,1-Dichloroethene	ND		1.0		ug/L			04/06/13 01:50	1
1,1-Dichloropropene	ND		1.0		ug/L			04/06/13 01:50	1
1,2,3-Trichlorobenzene	ND		1.0		ug/L			04/06/13 01:50	1
1,2,3-Trichloropropane	ND		1.0		ug/L			04/06/13 01:50	1
1,2,4-Trichlorobenzene	ND		1.0		ug/L			04/06/13 01:50	1
1,2,4-Trimethylbenzene	ND		1.0		ug/L			04/06/13 01:50	1
1,2-Dibromo-3-Chloropropane	ND		5.0		ug/L			04/06/13 01:50	1
1,2-Dichlorobenzene	ND		1.0		ug/L			04/06/13 01:50	1
1,2-Dichloroethane	ND		1.0		ug/L			04/06/13 01:50	1
1,2-Dichloropropane	ND		1.0		ug/L			04/06/13 01:50	1
1,3,5-Trimethylbenzene	ND		1.0		ug/L			04/06/13 01:50	1
1,3-Dichlorobenzene	ND		1.0		ug/L			04/06/13 01:50	1
1,3-Dichloropropane	ND		1.0		ug/L			04/06/13 01:50	1
1,4-Dichlorobenzene	ND		1.0		ug/L			04/06/13 01:50	1
1,4-Dioxane	ND		50		ug/L			04/06/13 01:50	1
2,2-Dichloropropane	ND		1.0		ug/L			04/06/13 01:50	1
2-Butanone (MEK)	ND		10		ug/L			04/06/13 01:50	1
2-Chlorotoluene	ND		1.0		ug/L			04/06/13 01:50	1
2-Hexanone	ND		10		ug/L			04/06/13 01:50	1
4-Chlorotoluene	ND		1.0		ug/L			04/06/13 01:50	1
4-Isopropyltoluene	ND		1.0		ug/L			04/06/13 01:50	1
4-Methyl-2-pentanone (MIBK)	ND		10		ug/L			04/06/13 01:50	1
Acetone	ND	*	50		ug/L			04/06/13 01:50	1
Benzene	ND		1.0		ug/L			04/06/13 01:50	1
Bromobenzene	ND		1.0		ug/L			04/06/13 01:50	1
Bromoform	ND		1.0		ug/L			04/06/13 01:50	1
Bromomethane	ND		2.0		ug/L			04/06/13 01:50	1
Carbon disulfide	ND		10		ug/L			04/06/13 01:50	1
Carbon tetrachloride	ND		1.0		ug/L			04/06/13 01:50	1
Chlorobenzene	ND		1.0		ug/L			04/06/13 01:50	1
Chlorobromomethane	ND		1.0		ug/L			04/06/13 01:50	1
Chlorodibromomethane	ND		0.50		ug/L			04/06/13 01:50	1
Chloroethane	ND		2.0		ug/L			04/06/13 01:50	1
Chloroform	ND		1.0		ug/L			04/06/13 01:50	1
Chloromethane	ND		2.0		ug/L			04/06/13 01:50	1

Client Sample ID: DUPX3-2013 0401-01

Lab Sample ID: 480-35387-35

Date Collected: 04/01/13 00:00

Matrix: Water

Date Received: 04/02/13 01:40

Method: 8260C - Volatile Organic Compounds (GC/MS) (Continued)

Analyte	Result	Qualifier	RL	MDL	Unit	D	Prepared	Analyzed	Dil Fac
cis-1,2-Dichloroethene	ND		1.0		ug/L			04/06/13 01:50	1
cis-1,3-Dichloropropene	ND		0.40		ug/L			04/06/13 01:50	1
Dichlorobromomethane	ND		0.50		ug/L			04/06/13 01:50	1
Dichlorodifluoromethane	ND	*	1.0		ug/L			04/06/13 01:50	1
Ethyl ether	ND		1.0		ug/L			04/06/13 01:50	1
Ethylbenzene	ND		1.0		ug/L			04/06/13 01:50	1
Ethylene Dibromide	ND		1.0		ug/L			04/06/13 01:50	1
Hexachlorobutadiene	ND		0.40		ug/L			04/06/13 01:50	1
Isopropyl ether	ND		10		ug/L			04/06/13 01:50	1
Isopropylbenzene	ND		1.0		ug/L			04/06/13 01:50	1
Methyl tert-butyl ether	ND		1.0		ug/L			04/06/13 01:50	1
Methylene Chloride	ND		1.0		ug/L			04/06/13 01:50	1
m-Xylene & p-Xylene	ND		2.0		ug/L			04/06/13 01:50	1
Naphthalene	ND		5.0		ug/L			04/06/13 01:50	1
n-Butylbenzene	ND		1.0		ug/L			04/06/13 01:50	1
N-Propylbenzene	ND		1.0		ug/L			04/06/13 01:50	1
o-Xylene	ND		1.0		ug/L			04/06/13 01:50	1
sec-Butylbenzene	ND		1.0		ug/L			04/06/13 01:50	1
Styrene	ND		1.0		ug/L			04/06/13 01:50	1
Tert-amyl methyl ether	ND		5.0		ug/L			04/06/13 01:50	1
Tert-butyl ethyl ether	ND		5.0		ug/L			04/06/13 01:50	1
tert-Butylbenzene	ND		1.0		ug/L			04/06/13 01:50	1
Tetrachloroethene	ND		1.0		ug/L			04/06/13 01:50	1
Tetrahydrofuran	ND		10		ug/L			04/06/13 01:50	1
Toluene	ND		1.0		ug/L			04/06/13 01:50	1
trans-1,2-Dichloroethene	ND		1.0		ug/L			04/06/13 01:50	1
trans-1,3-Dichloropropene	ND		0.40		ug/L			04/06/13 01:50	1
Trichloroethene	ND		1.0		ug/L			04/06/13 01:50	1
Trichlorofluoromethane	ND		1.0		ug/L			04/06/13 01:50	1
Vinyl chloride	ND		1.0		ug/L			04/06/13 01:50	1
Dibromomethane	ND		1.0		ug/L			04/06/13 01:50	1

Surrogate	*%Recovery*	*Qualifier*	*Limits*	*Prepared*	*Analyzed*	*Dil Fac*
Toluene-d8 (Surr)	*96*		*70 - 130*		*04/06/13 01:50*	*1*
1,2-Dichloroethane-d4 (Surr)	*85*		*70 - 130*		*04/06/13 01:50*	*1*
4-Bromofluorobenzene (Surr)	*103*		*70 - 130*		*04/06/13 01:50*	*1*

Client Sample ID: Trip Blank

Lab Sample ID: 480-35387-36

Date Collected: 04/01/13 00:00

Matrix: Water

Date Received: 04/02/13 01:40

Method: 8260B SIM - Volatile Organic Compounds (GC/MS)

Analyte	Result	Qualifier	RL	MDL	Unit	D	Prepared	Analyzed	Dil Fac
1,4-Dioxane	ND		1.6		ug/L			04/03/13 12:42	1

Surrogate	*%Recovery*	*Qualifier*	*Limits*	*Prepared*	*Analyzed*	*Dil Fac*
Dibromofluoromethane (Surr)	*110*		*50 - 150*		*04/03/13 12:42*	*1*
TBA-d9 (Surr)	*133*		*50 - 150*		*04/03/13 12:42*	*1*

Client: Innovative Engineering Solutions, Inc
Project/Site: IDS Wayland

TestAmerica Job ID: 480-35387-1

Client Sample ID: Trip Blank
Date Collected: 04/01/13 00:00
Date Received: 04/02/13 01:40

Lab Sample ID: 480-35387-36
Matrix: Water

Method: 8260C - Volatile Organic Compounds (GC/MS)

Analyte	Result	Qualifier	RL	MDL	Unit	D	Prepared	Analyzed	Dil Fac
1,1,1,2-Tetrachloroethane	ND		1.0		ug/L			04/05/13 17:01	1
1,1,1-Trichloroethane	ND		1.0		ug/L			04/05/13 17:01	1
1,1,2,2-Tetrachloroethane	ND		0.50		ug/L			04/05/13 17:01	1
1,1,2-Trichloroethane	ND		1.0		ug/L			04/05/13 17:01	1
1,1-Dichloroethane	ND		1.0		ug/L			04/05/13 17:01	1
1,1-Dichloroethene	ND		1.0		ug/L			04/05/13 17:01	1
1,1-Dichloropropene	ND		1.0		ug/L			04/05/13 17:01	1
1,2,3-Trichlorobenzene	ND		1.0		ug/L			04/05/13 17:01	1
1,2,3-Trichloropropane	ND		1.0		ug/L			04/05/13 17:01	1
1,2,4-Trichlorobenzene	ND		1.0		ug/L			04/05/13 17:01	1
1,2,4-Trimethylbenzene	ND		1.0		ug/L			04/05/13 17:01	1
1,2-Dibromo-3-Chloropropane	ND		5.0		ug/L			04/05/13 17:01	1
1,2-Dichlorobenzene	ND		1.0		ug/L			04/05/13 17:01	1
1,2-Dichloroethane	ND		1.0		ug/L			04/05/13 17:01	1
1,2-Dichloropropane	ND		1.0		ug/L			04/05/13 17:01	1
1,3,5-Trimethylbenzene	ND		1.0		ug/L			04/05/13 17:01	1
1,3-Dichlorobenzene	ND		1.0		ug/L			04/05/13 17:01	1
1,3-Dichloropropane	ND		1.0		ug/L			04/05/13 17:01	1
1,4-Dichlorobenzene	ND		1.0		ug/L			04/05/13 17:01	1
1,4-Dioxane	ND		50		ug/L			04/05/13 17:01	1
2,2-Dichloropropane	ND		1.0		ug/L			04/05/13 17:01	1
2-Butanone (MEK)	ND		10		ug/L			04/05/13 17:01	1
2-Chlorotoluene	ND		1.0		ug/L			04/05/13 17:01	1
2-Hexanone	ND		10		ug/L			04/05/13 17:01	1
4-Chlorotoluene	ND		1.0		ug/L			04/05/13 17:01	1
4-Isopropyltoluene	ND		1.0		ug/L			04/05/13 17:01	1
4-Methyl-2-pentanone (MIBK)	ND		10		ug/L			04/05/13 17:01	1
Acetone	ND		50		ug/L			04/05/13 17:01	1
Benzene	ND		1.0		ug/L			04/05/13 17:01	1
Bromobenzene	ND		1.0		ug/L			04/05/13 17:01	1
Bromoform	ND		1.0		ug/L			04/05/13 17:01	1
Bromomethane	ND		2.0		ug/L			04/05/13 17:01	1
Carbon disulfide	ND		10		ug/L			04/05/13 17:01	1
Carbon tetrachloride	ND		1.0		ug/L			04/05/13 17:01	1
Chlorobenzene	ND		1.0		ug/L			04/05/13 17:01	1
Chlorobromomethane	ND		1.0		ug/L			04/05/13 17:01	1
Chlorodibromomethane	ND		0.50		ug/L			04/05/13 17:01	1
Chloroethane	ND		2.0		ug/L			04/05/13 17:01	1
Chloroform	ND		1.0		ug/L			04/05/13 17:01	1
Chloromethane	ND		2.0		ug/L			04/05/13 17:01	1
cis-1,2-Dichloroethene	ND		1.0		ug/L			04/05/13 17:01	1
cis-1,3-Dichloropropene	ND		0.40		ug/L			04/05/13 17:01	1
Dichlorobromomethane	ND		0.50		ug/L			04/05/13 17:01	1
Dichlorodifluoromethane	ND		1.0		ug/L			04/05/13 17:01	1
Ethyl ether	ND		1.0		ug/L			04/05/13 17:01	1
Ethylbenzene	ND		1.0		ug/L			04/05/13 17:01	1
Ethylene Dibromide	ND		1.0		ug/L			04/05/13 17:01	1
Hexachlorobutadiene	ND		0.40		ug/L			04/05/13 17:01	1
Isopropyl ether	ND		10		ug/L			04/05/13 17:01	1

Client Sample ID: Trip Blank

Lab Sample ID: 480-35387-36

Date Collected: 04/01/13 00:00

Matrix: Water

Date Received: 04/02/13 01:40

Method: 8260C - Volatile Organic Compounds (GC/MS) (Continued)

Analyte	Result	Qualifier	RL	MDL	Unit	D	Prepared	Analyzed	Dil Fac
Isopropylbenzene	ND		1.0		ug/L			04/05/13 17:01	1
Methyl tert-butyl ether	ND		1.0		ug/L			04/05/13 17:01	1
Methylene Chloride	ND		1.0		ug/L			04/05/13 17:01	1
m-Xylene & p-Xylene	ND		2.0		ug/L			04/05/13 17:01	1
Naphthalene	ND		5.0		ug/L			04/05/13 17:01	1
n-Butylbenzene	ND		1.0		ug/L			04/05/13 17:01	1
N-Propylbenzene	ND		1.0		ug/L			04/05/13 17:01	1
o-Xylene	ND		1.0		ug/L			04/05/13 17:01	1
sec-Butylbenzene	ND		1.0		ug/L			04/05/13 17:01	1
Styrene	ND		1.0		ug/L			04/05/13 17:01	1
Tert-amyl methyl ether	ND		5.0		ug/L			04/05/13 17:01	1
Tert-butyl ethyl ether	ND		5.0		ug/L			04/05/13 17:01	1
tert-Butylbenzene	ND		1.0		ug/L			04/05/13 17:01	1
Tetrachloroethene	ND		1.0		ug/L			04/05/13 17:01	1
Tetrahydrofuran	ND		10		ug/L			04/05/13 17:01	1
Toluene	ND		1.0		ug/L			04/05/13 17:01	1
trans-1,2-Dichloroethene	ND		1.0		ug/L			04/05/13 17:01	1
trans-1,3-Dichloropropene	ND		0.40		ug/L			04/05/13 17:01	1
Trichloroethene	ND		1.0		ug/L			04/05/13 17:01	1
Trichlorofluoromethane	ND		1.0		ug/L			04/05/13 17:01	1
Vinyl chloride	ND		1.0		ug/L			04/05/13 17:01	1
Dibromomethane	ND		1.0		ug/L			04/05/13 17:01	1

Surrogate	*%Recovery*	*Qualifier*	*Limits*	*Prepared*	*Analyzed*	*Dil Fac*
Toluene-d8 (Surr)	*96*		*70 - 130*		*04/05/13 17:01*	*1*
1,2-Dichloroethane-d4 (Surr)	*89*		*70 - 130*		*04/05/13 17:01*	*1*
4-Bromofluorobenzene (Surr)	*107*		*70 - 130*		*04/05/13 17:01*	*1*

Surrogate Summary

Client: Innovative Engineering Solutions, Inc
Project/Site: IDS Wayland

TestAmerica Job ID: 480-35387-1

Method: 8260B SIM - Volatile Organic Compounds (GC/MS)

Matrix: Water **Prep Type: Total/NA**

		Percent Surrogate Recovery (Acceptance Limits)							
Lab Sample ID	Client Sample ID	DBFM (50-150)	BA-d9 (Sur (50-150)						
480-35387-3	MW-261S-2013 0401	100	202 X						
480-35387-7	MW-265M-2013 0329-01	106	156 X						
480-35387-9	MW-266Ma-2013 0329-01	107	108						
480-35387-11	MW-267S-2013 0329-01	102	91						
480-35387-13	MW-268M-2013 0329-01	95	92						
480-35387-15	MW-269Ma-2013 0329-01	105	142						
480-35387-17	MW-552-2013 0329-01	104	152 X						
480-35387-34	DUPX2-2013 0329-01	107	112						
480-35387-36	Trip Blank	110	133						
LCS 480-110641/3	Lab Control Sample	105	127						
LCSD 480-110641/4	Lab Control Sample Dup	103	123						
MB 480-110641/5	Method Blank	107	145						

Surrogate Legend

DBFM = Dibromofluoromethane (Surr)

TBA-d9 (Surr) = TBA-d9 (Surr)

Method: 8260C - Volatile Organic Compounds (GC/MS)

Matrix: Water **Prep Type: Total/NA**

		Percent Surrogate Recovery (Acceptance Limits)							
Lab Sample ID	Client Sample ID	TOL (70-130)	12DCE (70-130)	BFB (70-130)					
480-35387-1	DEP-19M-2013 0401-01	95	87	103					
480-35387-2	DEP-21-2013 0401-01	93	88	103					
480-35387-3	MW-261S-2013 0401	95	88	103					
480-35387-4	MW-263M-2013 0401	97	89	104					
480-35387-5	MW-264M-2013 0401	94	88	104					
480-35387-6	MW-265S-2013 0401	97	87	106					
480-35387-7	MW-265M-2013 0329-01	96	89	102					
480-35387-7 - DL	MW-265M-2013 0329-01	96	86	102					
480-35387-7 MS	MW-265M-2013 0329-01	96	82	107					
480-35387-7 MSD	MW-265M-2013 0329-01	95	82	108					
480-35387-8	MW-265D-2013 0401-01	96	87	104					
480-35387-9	MW-266Ma-2013 0329-01	95	88	103					
480-35387-10	MW-266Mb-2013 0401-01	97	85	103					
480-35387-11	MW-267S-2013 0329-01	96	84	104					
480-35387-12	MW-267M-2013 0329-01	96	87	105					
480-35387-12 - DL	MW-267M-2013 0329-01	96	88	103					
480-35387-13	MW-268M-2013 0329-01	96	86	103					
480-35387-14	MW-268D-2013 0401	96	88	102					
480-35387-15	MW-269Ma-2013 0329-01	97	88	102					
480-35387-16	MW-551-2013 0329-01	94	88	101					
480-35387-16 - DL	MW-551-2013 0329-01	95	89	101					
480-35387-17	MW-552-2013 0329-01	98	87	103					
480-35387-18	MW-553-2013 0329-01	96	88	103					
480-35387-18 - DL	MW-553-2013 0329-01	96	88	101					
480-35387-19	MW-560-2013 0329-01	95	90	103					
480-35387-20	MW-561-2013 0329-01	96	86	103					

Surrogate Summary

Client: Innovative Engineering Solutions, Inc
Project/Site: IDS Wayland

TestAmerica Job ID: 480-35387-1

Method: 8260C - Volatile Organic Compounds (GC/MS) (Continued)

Matrix: Water **Prep Type: Total/NA**

		Percent Surrogate Recovery (Acceptance Limits)		
		TOL	12DCE	BFB
Lab Sample ID	Client Sample ID	(70-130)	(70-130)	(70-130)
480-35387-21	MW-562-2013 0329-01	96	87	103
480-35387-22	MW-563-2013 0329-01	96	86	105
480-35387-23	REW-1-2013 0328-01	95	88	103
480-35387-24	REW-4-2013 0328-01	96	89	104
480-35387-24 - DL	REW-4-2013 0328-01	96	86	102
480-35387-25	REW-5-2013 0328-01	97	89	105
480-35387-26	REW-6-2013 0329-01	96	87	103
480-35387-27	REW-7-2013 0401-01	96	88	101
480-35387-28	REW-8-2013 0328-01	95	87	103
480-35387-29	REW-9-2013 0328-01	94	84	102
480-35387-30	REW-10-2013 0328-01	95	87	104
480-35387-31	REW-11-2013 0329-01	95	85	102
480-35387-31 - DL	REW-11-2013 0329-01	96	83	105
480-35387-32	REW-12-2013 0328-01	96	88	103
480-35387-32 - DL	REW-12-2013 0328-01	95	86	104
480-35387-33	DUPX1-2013 0328-01	95	84	104
480-35387-34	DUPX2-2013 0329-01	96	85	104
480-35387-35	DUPX3-2013 0401-01	96	85	103
480-35387-36	Trip Blank	96	89	107
LCS 480-110854/4	Lab Control Sample	95	83	105
LCS 480-111019/4	Lab Control Sample	95	81	106
LCS 480-111112/4	Lab Control Sample	94	80	105
LCS 480-111260/4	Lab Control Sample	93	79	103
LCSD 480-110854/5	Lab Control Sample Dup	93	84	106
LCSD 480-111019/5	Lab Control Sample Dup	94	81	104
LCSD 480-111112/5	Lab Control Sample Dup	94	80	107
LCSD 480-111260/5	Lab Control Sample Dup	94	79	109
MB 480-110854/7	Method Blank	97	87	103
MB 480-111019/7	Method Blank	96	85	103
MB 480-111112/7	Method Blank	95	83	103
MB 480-111260/7	Method Blank	97	81	103

Surrogate Legend

TOL = Toluene-d8 (Surr)

12DCE = 1,2-Dichloroethane-d4 (Surr)

BFB = 4-Bromofluorobenzene (Surr)

Method: 8260B SIM - Volatile Organic Compounds (GC/MS)

Lab Sample ID: MB 480-110641/5
Matrix: Water
Analysis Batch: 110641

Client Sample ID: Method Blank
Prep Type: Total/NA

Analyte	MB Result	MB Qualifier	RL	MDL	Unit	D	Prepared	Analyzed	Dil Fac
1,4-Dioxane	ND		1.6		ug/L			04/03/13 11:46	1

Surrogate	*MB %Recovery*	*MB Qualifier*	*Limits*	*Prepared*	*Analyzed*	*Dil Fac*
Dibromofluoromethane (Surr)	*107*		*50 - 150*		*04/03/13 11:46*	*1*
TBA-d9 (Surr)	*145*		*50 - 150*		*04/03/13 11:46*	*1*

Lab Sample ID: LCS 480-110641/3
Matrix: Water
Analysis Batch: 110641

Client Sample ID: Lab Control Sample
Prep Type: Total/NA

Analyte	Spike Added	LCS Result	LCS Qualifier	Unit	D	%Rec	%Rec. Limits
1,4-Dioxane	16.0	17.0		ug/L		106	

Surrogate	*LCS %Recovery*	*LCS Qualifier*	*Limits*
Dibromofluoromethane (Surr)	*105*		*50 - 150*
TBA-d9 (Surr)	*127*		*50 - 150*

Lab Sample ID: LCSD 480-110641/4
Matrix: Water
Analysis Batch: 110641

Client Sample ID: Lab Control Sample Dup
Prep Type: Total/NA

Analyte	Spike Added	LCSD Result	LCSD Qualifier	Unit	D	%Rec	%Rec. Limits	RPD	RPD Limit
1,4-Dioxane	16.0	16.9		ug/L		106		0	

Surrogate	*LCSD %Recovery*	*LCSD Qualifier*	*Limits*
Dibromofluoromethane (Surr)	*103*		*50 - 150*
TBA-d9 (Surr)	*123*		*50 - 150*

Method: 8260C - Volatile Organic Compounds (GC/MS)

Lab Sample ID: MB 480-110854/7
Matrix: Water
Analysis Batch: 110854

Client Sample ID: Method Blank
Prep Type: Total/NA

Analyte	MB Result	MB Qualifier	RL	MDL	Unit	D	Prepared	Analyzed	Dil Fac
1,1,1,2-Tetrachloroethane	ND		1.0		ug/L			04/04/13 11:22	1
1,1,1-Trichloroethane	ND		1.0		ug/L			04/04/13 11:22	1
1,1,2,2-Tetrachloroethane	ND		0.50		ug/L			04/04/13 11:22	1
1,1,2-Trichloroethane	ND		1.0		ug/L			04/04/13 11:22	1
1,1-Dichloroethane	ND		1.0		ug/L			04/04/13 11:22	1
1,1-Dichloroethene	ND		1.0		ug/L			04/04/13 11:22	1
1,1-Dichloropropene	ND		1.0		ug/L			04/04/13 11:22	1
1,2,3-Trichlorobenzene	ND		1.0		ug/L			04/04/13 11:22	1
1,2,3-Trichloropropane	ND		1.0		ug/L			04/04/13 11:22	1
1,2,4-Trichlorobenzene	ND		1.0		ug/L			04/04/13 11:22	1
1,2,4-Trimethylbenzene	ND		1.0		ug/L			04/04/13 11:22	1
1,2-Dibromo-3-Chloropropane	ND		5.0		ug/L			04/04/13 11:22	1

Method: 8260C - Volatile Organic Compounds (GC/MS) (Continued)

Lab Sample ID: MB 480-110854/7
Matrix: Water
Analysis Batch: 110854

Client Sample ID: Method Blank
Prep Type: Total/NA

Analyte	MB Result	MB Qualifier	RL	MDL	Unit	D	Prepared	Analyzed	Dil Fac
1,2-Dichlorobenzene	ND		1.0		ug/L			04/04/13 11:22	1
1,2-Dichloroethane	ND		1.0		ug/L			04/04/13 11:22	1
1,2-Dichloropropane	ND		1.0		ug/L			04/04/13 11:22	1
1,3,5-Trimethylbenzene	ND		1.0		ug/L			04/04/13 11:22	1
1,3-Dichlorobenzene	ND		1.0		ug/L			04/04/13 11:22	1
1,3-Dichloropropane	ND		1.0		ug/L			04/04/13 11:22	1
1,4-Dichlorobenzene	ND		1.0		ug/L			04/04/13 11:22	1
1,4-Dioxane	ND		50		ug/L			04/04/13 11:22	1
2,2-Dichloropropane	ND		1.0		ug/L			04/04/13 11:22	1
2-Butanone (MEK)	ND		10		ug/L			04/04/13 11:22	1
2-Chlorotoluene	ND		1.0		ug/L			04/04/13 11:22	1
2-Hexanone	ND		10		ug/L			04/04/13 11:22	1
4-Chlorotoluene	ND		1.0		ug/L			04/04/13 11:22	1
4-Isopropyltoluene	ND		1.0		ug/L			04/04/13 11:22	1
4-Methyl-2-pentanone (MIBK)	ND		10		ug/L			04/04/13 11:22	1
Acetone	ND		50		ug/L			04/04/13 11:22	1
Benzene	ND		1.0		ug/L			04/04/13 11:22	1
Bromobenzene	ND		1.0		ug/L			04/04/13 11:22	1
Bromoform	ND		1.0		ug/L			04/04/13 11:22	1
Bromomethane	ND		2.0		ug/L			04/04/13 11:22	1
Carbon disulfide	ND		10		ug/L			04/04/13 11:22	1
Carbon tetrachloride	ND		1.0		ug/L			04/04/13 11:22	1
Chlorobenzene	ND		1.0		ug/L			04/04/13 11:22	1
Chlorobromomethane	ND		1.0		ug/L			04/04/13 11:22	1
Chlorodibromomethane	ND		0.50		ug/L			04/04/13 11:22	1
Chloroethane	ND		2.0		ug/L			04/04/13 11:22	1
Chloroform	ND		1.0		ug/L			04/04/13 11:22	1
Chloromethane	ND		2.0		ug/L			04/04/13 11:22	1
cis-1,2-Dichloroethene	ND		1.0		ug/L			04/04/13 11:22	1
cis-1,3-Dichloropropene	ND		0.40		ug/L			04/04/13 11:22	1
Dichlorobromomethane	ND		0.50		ug/L			04/04/13 11:22	1
Dichlorodifluoromethane	ND		1.0		ug/L			04/04/13 11:22	1
Ethyl ether	ND		1.0		ug/L			04/04/13 11:22	1
Ethylbenzene	ND		1.0		ug/L			04/04/13 11:22	1
Ethylene Dibromide	ND		1.0		ug/L			04/04/13 11:22	1
Hexachlorobutadiene	ND		0.40		ug/L			04/04/13 11:22	1
Isopropyl ether	ND		10		ug/L			04/04/13 11:22	1
Isopropylbenzene	ND		1.0		ug/L			04/04/13 11:22	1
Methyl tert-butyl ether	ND		1.0		ug/L			04/04/13 11:22	1
Methylene Chloride	ND		1.0		ug/L			04/04/13 11:22	1
m-Xylene & p-Xylene	ND		2.0		ug/L			04/04/13 11:22	1
Naphthalene	ND		5.0		ug/L			04/04/13 11:22	1
n-Butylbenzene	ND		1.0		ug/L			04/04/13 11:22	1
N-Propylbenzene	ND		1.0		ug/L			04/04/13 11:22	1
o-Xylene	ND		1.0		ug/L			04/04/13 11:22	1
sec-Butylbenzene	ND		1.0		ug/L			04/04/13 11:22	1
Styrene	ND		1.0		ug/L			04/04/13 11:22	1
Tert-amyl methyl ether	ND		5.0		ug/L			04/04/13 11:22	1

Method: 8260C - Volatile Organic Compounds (GC/MS) (Continued)

Lab Sample ID: MB 480-110854/7
Matrix: Water
Analysis Batch: 110854

Client Sample ID: Method Blank
Prep Type: Total/NA

Analyte	MB Result	MB Qualifier	RL	MDL	Unit	D	Prepared	Analyzed	Dil Fac
Tert-butyl ethyl ether	ND		5.0		ug/L			04/04/13 11:22	1
tert-Butylbenzene	ND		1.0		ug/L			04/04/13 11:22	1
Tetrachloroethene	ND		1.0		ug/L			04/04/13 11:22	1
Tetrahydrofuran	ND		10		ug/L			04/04/13 11:22	1
Toluene	ND		1.0		ug/L			04/04/13 11:22	1
trans-1,2-Dichloroethene	ND		1.0		ug/L			04/04/13 11:22	1
trans-1,3-Dichloropropene	ND		0.40		ug/L			04/04/13 11:22	1
Trichloroethene	ND		1.0		ug/L			04/04/13 11:22	1
Trichlorofluoromethane	ND		1.0		ug/L			04/04/13 11:22	1
Vinyl chloride	ND		1.0		ug/L			04/04/13 11:22	1
Dibromomethane	ND		1.0		ug/L			04/04/13 11:22	1

Surrogate	*MB %Recovery*	*MB Qualifier*	*Limits*	*Prepared*	*Analyzed*	*Dil Fac*
Toluene-d8 (Surr)	*97*		*70 - 130*		*04/04/13 11:22*	*1*
1,2-Dichloroethane-d4 (Surr)	*87*		*70 - 130*		*04/04/13 11:22*	*1*
4-Bromofluorobenzene (Surr)	*103*		*70 - 130*		*04/04/13 11:22*	*1*

Lab Sample ID: LCS 480-110854/4
Matrix: Water
Analysis Batch: 110854

Client Sample ID: Lab Control Sample
Prep Type: Total/NA

Analyte	Spike Added	LCS Result	LCS Qualifier	Unit	D	%Rec	%Rec. Limits
1,1,1,2-Tetrachloroethane	25.0	24.8		ug/L		99	70 - 130
1,1,1-Trichloroethane	25.0	21.7		ug/L		87	70 - 130
1,1,2,2-Tetrachloroethane	25.0	22.3		ug/L		89	70 - 130
1,1,2-Trichloroethane	25.0	23.8		ug/L		95	70 - 130
1,1-Dichloroethane	25.0	23.1		ug/L		93	70 - 130
1,1-Dichloroethene	25.0	23.8		ug/L		95	70 - 130
1,1-Dichloropropene	25.0	23.9		ug/L		96	70 - 130
1,2,3-Trichlorobenzene	25.0	25.8		ug/L		103	70 - 130
1,2,3-Trichloropropane	25.0	22.3		ug/L		89	70 - 130
1,2,4-Trichlorobenzene	25.0	26.2		ug/L		105	70 - 130
1,2,4-Trimethylbenzene	25.0	21.7		ug/L		87	70 - 130
1,2-Dibromo-3-Chloropropane	25.0	21.6		ug/L		86	70 - 130
1,2-Dichlorobenzene	25.0	23.1		ug/L		92	70 - 130
1,2-Dichloroethane	25.0	20.5		ug/L		82	70 - 130
1,2-Dichloropropane	25.0	23.2		ug/L		93	70 - 130
1,3,5-Trimethylbenzene	25.0	21.8		ug/L		87	70 - 130
1,3-Dichlorobenzene	25.0	23.3		ug/L		93	70 - 130
1,3-Dichloropropane	25.0	22.5		ug/L		90	70 - 130
1,4-Dichlorobenzene	25.0	23.0		ug/L		92	70 - 130
1,4-Dioxane	1000	934		ug/L		93	70 - 130
2,2-Dichloropropane	25.0	21.8		ug/L		87	70 - 130
2-Butanone (MEK)	125	152		ug/L		122	70 - 130
2-Chlorotoluene	25.0	22.0		ug/L		88	70 - 130
2-Hexanone	125	103		ug/L		83	70 - 130
4-Chlorotoluene	25.0	19.0		ug/L		76	70 - 130
4-Isopropyltoluene	25.0	22.6		ug/L		90	70 - 130

Method: 8260C - Volatile Organic Compounds (GC/MS) (Continued)

Lab Sample ID: LCS 480-110854/4
Matrix: Water
Analysis Batch: 110854

Client Sample ID: Lab Control Sample
Prep Type: Total/NA

Analyte	Spike Added	LCS Result	LCS Qualifier	Unit	D	%Rec	%Rec. Limits
4-Methyl-2-pentanone (MIBK)	125	105		ug/L		84	70 - 130
Acetone	125	98.3		ug/L		79	70 - 130
Benzene	25.0	23.7		ug/L		95	70 - 130
Bromobenzene	25.0	23.2		ug/L		93	70 - 130
Bromoform	25.0	26.6		ug/L		106	70 - 130
Bromomethane	25.0	25.9		ug/L		103	70 - 130
Carbon disulfide	25.0	23.5		ug/L		94	70 - 130
Carbon tetrachloride	25.0	22.7		ug/L		91	70 - 130
Chlorobenzene	25.0	24.5		ug/L		98	70 - 130
Chlorobromomethane	25.0	26.2		ug/L		105	70 - 130
Chlorodibromomethane	25.0	24.5		ug/L		98	70 - 130
Chloroethane	25.0	22.6		ug/L		90	70 - 130
Chloroform	25.0	22.1		ug/L		89	70 - 130
Chloromethane	25.0	24.5		ug/L		98	70 - 130
cis-1,2-Dichloroethene	25.0	25.0		ug/L		100	70 - 130
cis-1,3-Dichloropropene	25.0	23.5		ug/L		94	70 - 130
Dichlorobromomethane	25.0	23.1		ug/L		92	70 - 130
Dichlorodifluoromethane	50.0	55.9		ug/L		112	70 - 130
Ethyl ether	25.0	22.9		ug/L		92	70 - 130
Ethylbenzene	25.0	22.9		ug/L		92	70 - 130
Ethylene Dibromide	25.0	23.9		ug/L		95	70 - 130
Hexachlorobutadiene	25.0	26.0		ug/L		104	70 - 130
Isopropyl ether	25.0	23.3		ug/L		93	70 - 130
Isopropylbenzene	25.0	22.1		ug/L		88	70 - 130
Methyl tert-butyl ether	25.0	23.3		ug/L		93	70 - 130
Methylene Chloride	25.0	22.7		ug/L		91	70 - 130
m-Xylene & p-Xylene	50.0	48.1		ug/L		96	70 - 130
Naphthalene	25.0	24.0		ug/L		96	70 - 130
n-Butylbenzene	25.0	21.4		ug/L		86	70 - 130
N-Propylbenzene	25.0	21.7		ug/L		87	70 - 130
o-Xylene	25.0	23.6		ug/L		94	70 - 130
sec-Butylbenzene	25.0	22.2		ug/L		89	70 - 130
Styrene	25.0	23.7		ug/L		95	70 - 130
Tert-amyl methyl ether	25.0	23.7		ug/L		95	70 - 130
Tert-butyl ethyl ether	25.0	22.8		ug/L		91	70 - 130
tert-Butylbenzene	25.0	23.3		ug/L		93	70 - 130
Tetrachloroethene	25.0	27.3		ug/L		109	70 - 130
Tetrahydrofuran	125	112		ug/L		89	70 - 130
Toluene	25.0	23.5		ug/L		94	70 - 130
trans-1,2-Dichloroethene	25.0	24.1		ug/L		97	70 - 130
trans-1,3-Dichloropropene	25.0	22.4		ug/L		90	70 - 130
Trichloroethene	25.0	24.4		ug/L		98	70 - 130
Trichlorofluoromethane	25.0	24.3		ug/L		97	70 - 130
Vinyl chloride	25.0	24.1		ug/L		96	70 - 130
Dibromomethane	25.0	23.5		ug/L		94	70 - 130

Surrogate	*LCS %Recovery*	*LCS Qualifier*	*Limits*
Toluene-d8 (Surr)	*95*		*70 - 130*

Method: 8260C - Volatile Organic Compounds (GC/MS) (Continued)

Lab Sample ID: LCS 480-110854/4
Matrix: Water
Analysis Batch: 110854

Client Sample ID: Lab Control Sample
Prep Type: Total/NA

Surrogate	*LCS %Recovery*	*LCS Qualifier*	*Limits*
1,2-Dichloroethane-d4 (Surr)	*83*		*70 - 130*
4-Bromofluorobenzene (Surr)	*105*		*70 - 130*

Lab Sample ID: LCSD 480-110854/5
Matrix: Water
Analysis Batch: 110854

Client Sample ID: Lab Control Sample Dup
Prep Type: Total/NA

Analyte	Spike Added	LCSD Result	LCSD Qualifier	Unit	D	%Rec	%Rec. Limits	RPD	RPD Limit
1,1,1,2-Tetrachloroethane	25.0	24.6		ug/L		98	70 - 130	1	20
1,1,1-Trichloroethane	25.0	20.9		ug/L		83	70 - 130	4	20
1,1,2,2-Tetrachloroethane	25.0	22.5		ug/L		90	70 - 130	1	20
1,1,2-Trichloroethane	25.0	23.0		ug/L		92	70 - 130	4	20
1,1-Dichloroethane	25.0	22.7		ug/L		91	70 - 130	2	20
1,1-Dichloroethene	25.0	23.9		ug/L		96	70 - 130	1	20
1,1-Dichloropropene	25.0	23.0		ug/L		92	70 - 130	4	20
1,2,3-Trichlorobenzene	25.0	25.8		ug/L		103	70 - 130	0	20
1,2,3-Trichloropropane	25.0	22.8		ug/L		91	70 - 130	2	20
1,2,4-Trichlorobenzene	25.0	26.5		ug/L		106	70 - 130	1	20
1,2,4-Trimethylbenzene	25.0	21.8		ug/L		87	70 - 130	0	20
1,2-Dibromo-3-Chloropropane	25.0	22.3		ug/L		89	70 - 130	3	20
1,2-Dichlorobenzene	25.0	23.5		ug/L		94	70 - 130	2	20
1,2-Dichloroethane	25.0	20.1		ug/L		80	70 - 130	2	20
1,2-Dichloropropane	25.0	22.8		ug/L		91	70 - 130	2	20
1,3,5-Trimethylbenzene	25.0	21.9		ug/L		88	70 - 130	0	20
1,3-Dichlorobenzene	25.0	23.4		ug/L		94	70 - 130	0	20
1,3-Dichloropropane	25.0	22.3		ug/L		89	70 - 130	1	20
1,4-Dichlorobenzene	25.0	23.6		ug/L		94	70 - 130	3	20
1,4-Dioxane	1000	910		ug/L		91	70 - 130	3	20
2,2-Dichloropropane	25.0	21.3		ug/L		85	70 - 130	2	20
2-Butanone (MEK)	125	152		ug/L		122	70 - 130	0	20
2-Chlorotoluene	25.0	22.2		ug/L		89	70 - 130	1	20
2-Hexanone	125	103		ug/L		83	70 - 130	0	20
4-Chlorotoluene	25.0	18.9		ug/L		76	70 - 130	1	20
4-Isopropyltoluene	25.0	23.0		ug/L		92	70 - 130	1	20
4-Methyl-2-pentanone (MIBK)	125	103		ug/L		82	70 - 130	2	20
Acetone	125	99.5		ug/L		80	70 - 130	1	20
Benzene	25.0	23.3		ug/L		93	70 - 130	2	20
Bromobenzene	25.0	23.6		ug/L		94	70 - 130	2	20
Bromoform	25.0	26.0		ug/L		104	70 - 130	2	20
Bromomethane	25.0	22.7		ug/L		91	70 - 130	13	20
Carbon disulfide	25.0	22.9		ug/L		92	70 - 130	3	20
Carbon tetrachloride	25.0	21.6		ug/L		87	70 - 130	5	20
Chlorobenzene	25.0	23.5		ug/L		94	70 - 130	4	20
Chlorobromomethane	25.0	26.4		ug/L		105	70 - 130	1	20
Chlorodibromomethane	25.0	24.1		ug/L		96	70 - 130	2	20
Chloroethane	25.0	20.8		ug/L		83	70 - 130	8	20
Chloroform	25.0	22.0		ug/L		88	70 - 130	1	20
Chloromethane	25.0	23.3		ug/L		93	70 - 130	5	20

Method: 8260C - Volatile Organic Compounds (GC/MS) (Continued)

Lab Sample ID: LCSD 480-110854/5
Matrix: Water
Analysis Batch: 110854

Client Sample ID: Lab Control Sample Dup
Prep Type: Total/NA

Analyte	Spike Added	LCSD Result	LCSD Qualifier	Unit	D	%Rec	%Rec. Limits	RPD	RPD Limit
cis-1,2-Dichloroethene	25.0	24.5		ug/L		98	70 - 130	2	20
cis-1,3-Dichloropropene	25.0	23.4		ug/L		94	70 - 130	0	20
Dichlorobromomethane	25.0	22.5		ug/L		90	70 - 130	3	20
Dichlorodifluoromethane	50.0	52.5		ug/L		105	70 - 130	6	20
Ethyl ether	25.0	22.8		ug/L		91	70 - 130	0	20
Ethylbenzene	25.0	22.2		ug/L		89	70 - 130	3	20
Ethylene Dibromide	25.0	23.4		ug/L		94	70 - 130	2	20
Hexachlorobutadiene	25.0	25.7		ug/L		103	70 - 130	1	20
Isopropyl ether	25.0	22.9		ug/L		92	70 - 130	2	20
Isopropylbenzene	25.0	21.9		ug/L		88	70 - 130	1	20
Methyl tert-butyl ether	25.0	23.3		ug/L		93	70 - 130	0	20
Methylene Chloride	25.0	22.7		ug/L		91	70 - 130	0	20
m-Xylene & p-Xylene	50.0	46.2		ug/L		92	70 - 130	4	20
Naphthalene	25.0	24.7		ug/L		99	70 - 130	3	20
n-Butylbenzene	25.0	21.3		ug/L		85	70 - 130	0	20
N-Propylbenzene	25.0	21.6		ug/L		87	70 - 130	0	20
o-Xylene	25.0	23.3		ug/L		93	70 - 130	1	20
sec-Butylbenzene	25.0	22.0		ug/L		88	70 - 130	1	20
Styrene	25.0	23.1		ug/L		92	70 - 130	3	20
Tert-amyl methyl ether	25.0	23.7		ug/L		95	70 - 130	0	20
Tert-butyl ethyl ether	25.0	22.9		ug/L		92	70 - 130	0	20
tert-Butylbenzene	25.0	23.7		ug/L		95	70 - 130	2	20
Tetrachloroethene	25.0	26.3		ug/L		105	70 - 130	4	20
Tetrahydrofuran	125	109		ug/L		87	70 - 130	3	20
Toluene	25.0	22.8		ug/L		91	70 - 130	3	20
trans-1,2-Dichloroethene	25.0	24.5		ug/L		98	70 - 130	2	20
trans-1,3-Dichloropropene	25.0	21.7		ug/L		87	70 - 130	3	20
Trichloroethene	25.0	24.0		ug/L		96	70 - 130	1	20
Trichlorofluoromethane	25.0	22.4		ug/L		90	70 - 130	8	20
Vinyl chloride	25.0	22.4		ug/L		90	70 - 130	7	20
Dibromomethane	25.0	23.7		ug/L		95	70 - 130	1	20

Surrogate	*LCSD %Recovery*	*LCSD Qualifier*	*Limits*
Toluene-d8 (Surr)	*93*		*70 - 130*
1,2-Dichloroethane-d4 (Surr)	*84*		*70 - 130*
4-Bromofluorobenzene (Surr)	*106*		*70 - 130*

Lab Sample ID: MB 480-111019/7
Matrix: Water
Analysis Batch: 111019

Client Sample ID: Method Blank
Prep Type: Total/NA

Analyte	MB Result	MB Qualifier	RL	MDL	Unit	D	Prepared	Analyzed	Dil Fac
1,1,1,2-Tetrachloroethane	ND		1.0		ug/L			04/04/13 23:54	1
1,1,1-Trichloroethane	ND		1.0		ug/L			04/04/13 23:54	1
1,1,2,2-Tetrachloroethane	ND		0.50		ug/L			04/04/13 23:54	1
1,1,2-Trichloroethane	ND		1.0		ug/L			04/04/13 23:54	1
1,1-Dichloroethane	ND		1.0		ug/L			04/04/13 23:54	1
1,1-Dichloroethene	ND		1.0		ug/L			04/04/13 23:54	1

Method: 8260C - Volatile Organic Compounds (GC/MS) (Continued)

Lab Sample ID: MB 480-111019/7
Matrix: Water
Analysis Batch: 111019

Client Sample ID: Method Blank
Prep Type: Total/NA

Analyte	MB Result	MB Qualifier	RL	MDL	Unit	D	Prepared	Analyzed	Dil Fac
1,1-Dichloropropene	ND		1.0		ug/L			04/04/13 23:54	1
1,2,3-Trichlorobenzene	ND		1.0		ug/L			04/04/13 23:54	1
1,2,3-Trichloropropane	ND		1.0		ug/L			04/04/13 23:54	1
1,2,4-Trichlorobenzene	ND		1.0		ug/L			04/04/13 23:54	1
1,2,4-Trimethylbenzene	ND		1.0		ug/L			04/04/13 23:54	1
1,2-Dibromo-3-Chloropropane	ND		5.0		ug/L			04/04/13 23:54	1
1,2-Dichlorobenzene	ND		1.0		ug/L			04/04/13 23:54	1
1,2-Dichloroethane	ND		1.0		ug/L			04/04/13 23:54	1
1,2-Dichloropropane	ND		1.0		ug/L			04/04/13 23:54	1
1,3,5-Trimethylbenzene	ND		1.0		ug/L			04/04/13 23:54	1
1,3-Dichlorobenzene	ND		1.0		ug/L			04/04/13 23:54	1
1,3-Dichloropropane	ND		1.0		ug/L			04/04/13 23:54	1
1,4-Dichlorobenzene	ND		1.0		ug/L			04/04/13 23:54	1
1,4-Dioxane	ND		50		ug/L			04/04/13 23:54	1
2,2-Dichloropropane	ND		1.0		ug/L			04/04/13 23:54	1
2-Butanone (MEK)	ND		10		ug/L			04/04/13 23:54	1
2-Chlorotoluene	ND		1.0		ug/L			04/04/13 23:54	1
2-Hexanone	ND		10		ug/L			04/04/13 23:54	1
4-Chlorotoluene	ND		1.0		ug/L			04/04/13 23:54	1
4-Isopropyltoluene	ND		1.0		ug/L			04/04/13 23:54	1
4-Methyl-2-pentanone (MIBK)	ND		10		ug/L			04/04/13 23:54	1
Acetone	ND		50		ug/L			04/04/13 23:54	1
Benzene	ND		1.0		ug/L			04/04/13 23:54	1
Bromobenzene	ND		1.0		ug/L			04/04/13 23:54	1
Bromoform	ND		1.0		ug/L			04/04/13 23:54	1
Bromomethane	ND		2.0		ug/L			04/04/13 23:54	1
Carbon disulfide	ND		10		ug/L			04/04/13 23:54	1
Carbon tetrachloride	ND		1.0		ug/L			04/04/13 23:54	1
Chlorobenzene	ND		1.0		ug/L			04/04/13 23:54	1
Chlorobromomethane	ND		1.0		ug/L			04/04/13 23:54	1
Chlorodibromomethane	ND		0.50		ug/L			04/04/13 23:54	1
Chloroethane	ND		2.0		ug/L			04/04/13 23:54	1
Chloroform	ND		1.0		ug/L			04/04/13 23:54	1
Chloromethane	ND		2.0		ug/L			04/04/13 23:54	1
cis-1,2-Dichloroethene	ND		1.0		ug/L			04/04/13 23:54	1
cis-1,3-Dichloropropene	ND		0.40		ug/L			04/04/13 23:54	1
Dichlorobromomethane	ND		0.50		ug/L			04/04/13 23:54	1
Dichlorodifluoromethane	ND		1.0		ug/L			04/04/13 23:54	1
Ethyl ether	ND		1.0		ug/L			04/04/13 23:54	1
Ethylbenzene	ND		1.0		ug/L			04/04/13 23:54	1
Ethylene Dibromide	ND		1.0		ug/L			04/04/13 23:54	1
Hexachlorobutadiene	ND		0.40		ug/L			04/04/13 23:54	1
Isopropyl ether	ND		10		ug/L			04/04/13 23:54	1
Isopropylbenzene	ND		1.0		ug/L			04/04/13 23:54	1
Methyl tert-butyl ether	ND		1.0		ug/L			04/04/13 23:54	1
Methylene Chloride	ND		1.0		ug/L			04/04/13 23:54	1
m-Xylene & p-Xylene	ND		2.0		ug/L			04/04/13 23:54	1
Naphthalene	ND		5.0		ug/L			04/04/13 23:54	1

Method: 8260C - Volatile Organic Compounds (GC/MS) (Continued)

Lab Sample ID: MB 480-111019/7
Matrix: Water
Analysis Batch: 111019

Client Sample ID: Method Blank
Prep Type: Total/NA

Analyte	MB Result	MB Qualifier	RL	MDL	Unit	D	Prepared	Analyzed	Dil Fac
n-Butylbenzene	ND		1.0		ug/L			04/04/13 23:54	1
N-Propylbenzene	ND		1.0		ug/L			04/04/13 23:54	1
o-Xylene	ND		1.0		ug/L			04/04/13 23:54	1
sec-Butylbenzene	ND		1.0		ug/L			04/04/13 23:54	1
Styrene	ND		1.0		ug/L			04/04/13 23:54	1
Tert-amyl methyl ether	ND		5.0		ug/L			04/04/13 23:54	1
Tert-butyl ethyl ether	ND		5.0		ug/L			04/04/13 23:54	1
tert-Butylbenzene	ND		1.0		ug/L			04/04/13 23:54	1
Tetrachloroethene	ND		1.0		ug/L			04/04/13 23:54	1
Tetrahydrofuran	ND		10		ug/L			04/04/13 23:54	1
Toluene	ND		1.0		ug/L			04/04/13 23:54	1
trans-1,2-Dichloroethene	ND		1.0		ug/L			04/04/13 23:54	1
trans-1,3-Dichloropropene	ND		0.40		ug/L			04/04/13 23:54	1
Trichloroethene	ND		1.0		ug/L			04/04/13 23:54	1
Trichlorofluoromethane	ND		1.0		ug/L			04/04/13 23:54	1
Vinyl chloride	ND		1.0		ug/L			04/04/13 23:54	1
Dibromomethane	ND		1.0		ug/L			04/04/13 23:54	1

Surrogate	*MB %Recovery*	*MB Qualifier*	*Limits*	*Prepared*	*Analyzed*	*Dil Fac*
Toluene-d8 (Surr)	*96*		*70 - 130*		*04/04/13 23:54*	*1*
1,2-Dichloroethane-d4 (Surr)	*85*		*70 - 130*		*04/04/13 23:54*	*1*
4-Bromofluorobenzene (Surr)	*103*		*70 - 130*		*04/04/13 23:54*	*1*

Lab Sample ID: LCS 480-111019/4
Matrix: Water
Analysis Batch: 111019

Client Sample ID: Lab Control Sample
Prep Type: Total/NA

Analyte	Spike Added	LCS Result	LCS Qualifier	Unit	D	%Rec	%Rec. Limits
1,1,1,2-Tetrachloroethane	25.0	23.3		ug/L		93	70 - 130
1,1,1-Trichloroethane	25.0	18.8		ug/L		75	70 - 130
1,1,2,2-Tetrachloroethane	25.0	21.9		ug/L		88	70 - 130
1,1,2-Trichloroethane	25.0	22.6		ug/L		90	70 - 130
1,1-Dichloroethane	25.0	20.7		ug/L		83	70 - 130
1,1-Dichloroethene	25.0	21.2		ug/L		85	70 - 130
1,1-Dichloropropene	25.0	21.1		ug/L		84	70 - 130
1,2,3-Trichlorobenzene	25.0	25.1		ug/L		100	70 - 130
1,2,3-Trichloropropane	25.0	22.9		ug/L		91	70 - 130
1,2,4-Trichlorobenzene	25.0	25.5		ug/L		102	70 - 130
1,2,4-Trimethylbenzene	25.0	20.8		ug/L		83	70 - 130
1,2-Dibromo-3-Chloropropane	25.0	21.4		ug/L		86	70 - 130
1,2-Dichlorobenzene	25.0	22.8		ug/L		91	70 - 130
1,2-Dichloroethane	25.0	19.2		ug/L		77	70 - 130
1,2-Dichloropropane	25.0	21.3		ug/L		85	70 - 130
1,3,5-Trimethylbenzene	25.0	20.7		ug/L		83	70 - 130
1,3-Dichlorobenzene	25.0	22.4		ug/L		90	70 - 130
1,3-Dichloropropane	25.0	22.1		ug/L		89	70 - 130
1,4-Dichlorobenzene	25.0	22.8		ug/L		91	70 - 130
1,4-Dioxane	1000	980		ug/L		98	70 - 130

Method: 8260C - Volatile Organic Compounds (GC/MS) (Continued)

Lab Sample ID: LCS 480-111019/4
Matrix: Water
Analysis Batch: 111019

Client Sample ID: Lab Control Sample
Prep Type: Total/NA

Analyte	Spike Added	LCS Result	LCS Qualifier	Unit	D	%Rec	%Rec. Limits
2,2-Dichloropropane	25.0	18.9		ug/L		76	70 - 130
2-Butanone (MEK)	125	146		ug/L		117	70 - 130
2-Chlorotoluene	25.0	21.6		ug/L		87	70 - 130
2-Hexanone	125	96.4		ug/L		77	70 - 130
4-Chlorotoluene	25.0	18.0		ug/L		72	70 - 130
4-Isopropyltoluene	25.0	21.3		ug/L		85	70 - 130
4-Methyl-2-pentanone (MIBK)	125	97.9		ug/L		78	70 - 130
Acetone	125	89.0		ug/L		71	70 - 130
Benzene	25.0	21.6		ug/L		86	70 - 130
Bromobenzene	25.0	22.9		ug/L		92	70 - 130
Bromoform	25.0	24.3		ug/L		97	70 - 130
Bromomethane	25.0	20.3		ug/L		81	70 - 130
Carbon disulfide	25.0	17.9		ug/L		72	70 - 130
Carbon tetrachloride	25.0	19.2		ug/L		77	70 - 130
Chlorobenzene	25.0	23.0		ug/L		92	70 - 130
Chlorobromomethane	25.0	25.0		ug/L		100	70 - 130
Chlorodibromomethane	25.0	23.0		ug/L		92	70 - 130
Chloroethane	25.0	18.1		ug/L		72	70 - 130
Chloroform	25.0	20.9		ug/L		84	70 - 130
Chloromethane	25.0	21.2		ug/L		85	70 - 130
cis-1,2-Dichloroethene	25.0	22.7		ug/L		91	70 - 130
cis-1,3-Dichloropropene	25.0	21.7		ug/L		87	70 - 130
Dichlorobromomethane	25.0	20.6		ug/L		82	70 - 130
Dichlorodifluoromethane	50.0	39.4		ug/L		79	70 - 130
Ethyl ether	25.0	21.9		ug/L		88	70 - 130
Ethylbenzene	25.0	21.3		ug/L		85	70 - 130
Ethylene Dibromide	25.0	23.8		ug/L		95	70 - 130
Hexachlorobutadiene	25.0	24.8		ug/L		99	70 - 130
Isopropyl ether	25.0	22.4		ug/L		90	70 - 130
Isopropylbenzene	25.0	20.6		ug/L		83	70 - 130
Methyl tert-butyl ether	25.0	21.2		ug/L		85	70 - 130
Methylene Chloride	25.0	21.1		ug/L		84	70 - 130
m-Xylene & p-Xylene	50.0	43.4		ug/L		87	70 - 130
Naphthalene	25.0	23.6		ug/L		95	70 - 130
n-Butylbenzene	25.0	19.9		ug/L		80	70 - 130
N-Propylbenzene	25.0	20.0		ug/L		80	70 - 130
o-Xylene	25.0	22.0		ug/L		88	70 - 130
sec-Butylbenzene	25.0	20.7		ug/L		83	70 - 130
Styrene	25.0	22.2		ug/L		89	70 - 130
Tert-amyl methyl ether	25.0	24.0		ug/L		96	70 - 130
Tert-butyl ethyl ether	25.0	22.3		ug/L		89	70 - 130
tert-Butylbenzene	25.0	21.8		ug/L		87	70 - 130
Tetrachloroethene	25.0	25.0		ug/L		100	70 - 130
Tetrahydrofuran	125	102		ug/L		82	70 - 130
Toluene	25.0	22.0		ug/L		88	70 - 130
trans-1,2-Dichloroethene	25.0	22.0		ug/L		88	70 - 130
trans-1,3-Dichloropropene	25.0	20.6		ug/L		82	70 - 130
Trichloroethene	25.0	22.3		ug/L		89	70 - 130

Method: 8260C - Volatile Organic Compounds (GC/MS) (Continued)

Lab Sample ID: LCS 480-111019/4
Matrix: Water
Analysis Batch: 111019

Client Sample ID: Lab Control Sample
Prep Type: Total/NA

Analyte	Spike Added	LCS Result	LCS Qualifier	Unit	D	%Rec	%Rec. Limits
Trichlorofluoromethane	25.0	20.3		ug/L		81	70 - 130
Vinyl chloride	25.0	19.5		ug/L		78	70 - 130
Dibromomethane	25.0	22.7		ug/L		91	70 - 130

Surrogate	*LCS %Recovery*	*LCS Qualifier*	*Limits*
Toluene-d8 (Surr)	*95*		*70 - 130*
1,2-Dichloroethane-d4 (Surr)	*81*		*70 - 130*
4-Bromofluorobenzene (Surr)	*106*		*70 - 130*

Lab Sample ID: LCSD 480-111019/5
Matrix: Water
Analysis Batch: 111019

Client Sample ID: Lab Control Sample Dup
Prep Type: Total/NA

Analyte	Spike Added	LCSD Result	LCSD Qualifier	Unit	D	%Rec	%Rec. Limits	RPD	RPD Limit
1,1,1,2-Tetrachloroethane	25.0	23.1		ug/L		92	70 - 130	1	20
1,1,1-Trichloroethane	25.0	18.8		ug/L		75	70 - 130	0	20
1,1,2,2-Tetrachloroethane	25.0	21.8		ug/L		87	70 - 130	1	20
1,1,2-Trichloroethane	25.0	22.7		ug/L		91	70 - 130	1	20
1,1-Dichloroethane	25.0	20.7		ug/L		83	70 - 130	0	20
1,1-Dichloroethene	25.0	20.6		ug/L		83	70 - 130	3	20
1,1-Dichloropropene	25.0	20.6		ug/L		83	70 - 130	2	20
1,2,3-Trichlorobenzene	25.0	25.7		ug/L		103	70 - 130	2	20
1,2,3-Trichloropropane	25.0	22.2		ug/L		89	70 - 130	3	20
1,2,4-Trichlorobenzene	25.0	26.3		ug/L		105	70 - 130	3	20
1,2,4-Trimethylbenzene	25.0	20.5		ug/L		82	70 - 130	2	20
1,2-Dibromo-3-Chloropropane	25.0	20.8		ug/L		83	70 - 130	3	20
1,2-Dichlorobenzene	25.0	22.6		ug/L		90	70 - 130	1	20
1,2-Dichloroethane	25.0	19.0		ug/L		76	70 - 130	1	20
1,2-Dichloropropane	25.0	21.6		ug/L		86	70 - 130	1	20
1,3,5-Trimethylbenzene	25.0	20.2		ug/L		81	70 - 130	2	20
1,3-Dichlorobenzene	25.0	22.4		ug/L		90	70 - 130	0	20
1,3-Dichloropropane	25.0	22.2		ug/L		89	70 - 130	0	20
1,4-Dichlorobenzene	25.0	22.4		ug/L		90	70 - 130	1	20
1,4-Dioxane	1000	971		ug/L		97	70 - 130	1	20
2,2-Dichloropropane	25.0	19.0		ug/L		76	70 - 130	0	20
2-Butanone (MEK)	125	142		ug/L		114	70 - 130	3	20
2-Chlorotoluene	25.0	21.3		ug/L		85	70 - 130	2	20
2-Hexanone	125	95.2		ug/L		76	70 - 130	1	20
4-Chlorotoluene	25.0	18.0		ug/L		72	70 - 130	0	20
4-Isopropyltoluene	25.0	21.1		ug/L		84	70 - 130	1	20
4-Methyl-2-pentanone (MIBK)	125	95.4		ug/L		76	70 - 130	3	20
Acetone	125	86.9		ug/L		70	70 - 130	2	20
Benzene	25.0	21.5		ug/L		86	70 - 130	1	20
Bromobenzene	25.0	22.9		ug/L		92	70 - 130	0	20
Bromoform	25.0	24.5		ug/L		98	70 - 130	1	20
Bromomethane	25.0	19.8		ug/L		79	70 - 130	2	20
Carbon disulfide	25.0	18.1		ug/L		72	70 - 130	1	20
Carbon tetrachloride	25.0	19.3		ug/L		77	70 - 130	1	20

Method: 8260C - Volatile Organic Compounds (GC/MS) (Continued)

Lab Sample ID: LCSD 480-111019/5
Matrix: Water
Analysis Batch: 111019

Client Sample ID: Lab Control Sample Dup
Prep Type: Total/NA

Analyte	Spike Added	LCSD Result	LCSD Qualifier	Unit	D	%Rec	%Rec. Limits	RPD	RPD Limit
Chlorobenzene	25.0	22.7		ug/L		91	70 - 130	1	20
Chlorobromomethane	25.0	26.2		ug/L		105	70 - 130	5	20
Chlorodibromomethane	25.0	23.1		ug/L		93	70 - 130	1	20
Chloroethane	25.0	17.4	*	ug/L		69	70 - 130	4	20
Chloroform	25.0	20.7		ug/L		83	70 - 130	1	20
Chloromethane	25.0	20.5		ug/L		82	70 - 130	3	20
cis-1,2-Dichloroethene	25.0	22.2		ug/L		89	70 - 130	2	20
cis-1,3-Dichloropropene	25.0	22.0		ug/L		88	70 - 130	2	20
Dichlorobromomethane	25.0	21.1		ug/L		84	70 - 130	2	20
Dichlorodifluoromethane	50.0	37.0		ug/L		74	70 - 130	6	20
Ethyl ether	25.0	21.6		ug/L		86	70 - 130	2	20
Ethylbenzene	25.0	21.2		ug/L		85	70 - 130	0	20
Ethylene Dibromide	25.0	23.2		ug/L		93	70 - 130	3	20
Hexachlorobutadiene	25.0	24.3		ug/L		97	70 - 130	2	20
Isopropyl ether	25.0	22.0		ug/L		88	70 - 130	2	20
Isopropylbenzene	25.0	20.1		ug/L		80	70 - 130	3	20
Methyl tert-butyl ether	25.0	21.1		ug/L		84	70 - 130	0	20
Methylene Chloride	25.0	21.4		ug/L		86	70 - 130	1	20
m-Xylene & p-Xylene	50.0	43.3		ug/L		87	70 - 130	0	20
Naphthalene	25.0	23.4		ug/L		94	70 - 130	1	20
n-Butylbenzene	25.0	20.0		ug/L		80	70 - 130	0	20
N-Propylbenzene	25.0	19.7		ug/L		79	70 - 130	1	20
o-Xylene	25.0	21.9		ug/L		88	70 - 130	0	20
sec-Butylbenzene	25.0	20.4		ug/L		82	70 - 130	1	20
Styrene	25.0	22.2		ug/L		89	70 - 130	0	20
Tert-amyl methyl ether	25.0	23.7		ug/L		95	70 - 130	1	20
Tert-butyl ethyl ether	25.0	22.6		ug/L		90	70 - 130	1	20
tert-Butylbenzene	25.0	21.6		ug/L		86	70 - 130	1	20
Tetrachloroethene	25.0	24.7		ug/L		99	70 - 130	1	20
Tetrahydrofuran	125	99.2		ug/L		79	70 - 130	3	20
Toluene	25.0	21.7		ug/L		87	70 - 130	1	20
trans-1,2-Dichloroethene	25.0	22.1		ug/L		89	70 - 130	1	20
trans-1,3-Dichloropropene	25.0	20.7		ug/L		83	70 - 130	1	20
Trichloroethene	25.0	22.3		ug/L		89	70 - 130	0	20
Trichlorofluoromethane	25.0	19.9		ug/L		80	70 - 130	2	20
Vinyl chloride	25.0	19.3		ug/L		77	70 - 130	1	20
Dibromomethane	25.0	23.0		ug/L		92	70 - 130	1	20

Surrogate	*LCSD %Recovery*	*LCSD Qualifier*	*Limits*
Toluene-d8 (Surr)	*94*		*70 - 130*
1,2-Dichloroethane-d4 (Surr)	*81*		*70 - 130*
4-Bromofluorobenzene (Surr)	*104*		*70 - 130*

Method: 8260C - Volatile Organic Compounds (GC/MS) (Continued)

Lab Sample ID: 480-35387-7 MS
Matrix: Water
Analysis Batch: 111019

Client Sample ID: MW-265M-2013 0329-01
Prep Type: Total/NA

Analyte	Sample Result	Sample Qualifier	Spike Added	MS Result	MS Qualifier	Unit	D	%Rec	%Rec. Limits
1,1,1,2-Tetrachloroethane	ND		625	560		ug/L		90	70 - 130
1,1,1-Trichloroethane	ND		625	504		ug/L		81	70 - 130
1,1,2,2-Tetrachloroethane	ND		625	547		ug/L		88	70 - 130
1,1,2-Trichloroethane	ND		625	577		ug/L		92	70 - 130
1,1-Dichloroethane	ND		625	548		ug/L		88	70 - 130
1,1-Dichloroethene	ND		625	576		ug/L		92	70 - 130
1,1-Dichloropropene	ND		625	566		ug/L		90	70 - 130
1,2,3-Trichlorobenzene	ND		625	647		ug/L		104	70 - 130
1,2,3-Trichloropropane	ND		625	550		ug/L		88	70 - 130
1,2,4-Trichlorobenzene	ND		625	636		ug/L		102	70 - 130
1,2,4-Trimethylbenzene	ND		625	529		ug/L		85	70 - 130
1,2-Dibromo-3-Chloropropane	ND		625	513		ug/L		82	70 - 130
1,2-Dichlorobenzene	ND		625	573		ug/L		92	70 - 130
1,2-Dichloroethane	ND		625	488		ug/L		78	70 - 130
1,2-Dichloropropane	ND		625	562		ug/L		90	70 - 130
1,3,5-Trimethylbenzene	ND		625	533		ug/L		85	70 - 130
1,3-Dichlorobenzene	ND		625	569		ug/L		91	70 - 130
1,3-Dichloropropane	ND		625	556		ug/L		89	70 - 130
1,4-Dichlorobenzene	ND		625	550		ug/L		88	70 - 130
1,4-Dioxane	ND		25000	21000		ug/L		84	70 - 130
2,2-Dichloropropane	ND		625	395	F	ug/L		63	70 - 130
2-Butanone (MEK)	ND		3130	3580		ug/L		112	70 - 130
2-Chlorotoluene	ND		625	546		ug/L		87	70 - 130
2-Hexanone	ND		3130	2380		ug/L		76	70 - 130
4-Chlorotoluene	ND		625	464		ug/L		74	70 - 130
4-Isopropyltoluene	ND		625	540		ug/L		86	70 - 130
4-Methyl-2-pentanone (MIBK)	ND		3130	2440		ug/L		78	70 - 130
Acetone	7500		3130	7660	F	ug/L		4	70 - 130
Benzene	ND		625	571		ug/L		91	70 - 130
Bromobenzene	ND		625	573		ug/L		92	70 - 130
Bromoform	ND		625	409	F	ug/L		65	70 - 130
Bromomethane	ND		625	563		ug/L		90	70 - 130
Carbon disulfide	ND		625	436		ug/L		70	70 - 130
Carbon tetrachloride	ND		625	510		ug/L		82	70 - 130
Chlorobenzene	ND		625	593		ug/L		95	70 - 130
Chlorobromomethane	ND		625	651		ug/L		104	70 - 130
Chlorodibromomethane	ND		625	490		ug/L		78	70 - 130
Chloroethane	ND		625	503		ug/L		80	70 - 130
Chloroform	ND		625	541		ug/L		87	70 - 130
Chloromethane	ND		625	577		ug/L		92	70 - 130
cis-1,2-Dichloroethene	31		625	619		ug/L		94	70 - 130
cis-1,3-Dichloropropene	ND		625	527		ug/L		84	70 - 130
Dichlorobromomethane	ND		625	497		ug/L		80	70 - 130
Dichlorodifluoromethane	ND		1250	1250		ug/L		100	70 - 130
Ethyl ether	ND		625	548		ug/L		88	70 - 130
Ethylbenzene	ND		625	552		ug/L		88	70 - 130
Ethylene Dibromide	ND		625	577		ug/L		92	70 - 130
Hexachlorobutadiene	ND		625	617		ug/L		99	70 - 130

Method: 8260C - Volatile Organic Compounds (GC/MS) (Continued)

Lab Sample ID: 480-35387-7 MS
Matrix: Water
Analysis Batch: 111019

Client Sample ID: MW-265M-2013 0329-01
Prep Type: Total/NA

Analyte	Sample Result	Sample Qualifier	Spike Added	MS Result	MS Qualifier	Unit	D	%Rec	%Rec. Limits
Isopropyl ether	ND		625	552		ug/L		88	70 - 130
Isopropylbenzene	ND		625	526		ug/L		84	70 - 130
Methyl tert-butyl ether	ND		625	516		ug/L		83	70 - 130
Methylene Chloride	ND		625	543		ug/L		87	70 - 130
m-Xylene & p-Xylene	ND		1250	1150		ug/L		92	70 - 130
Naphthalene	ND		625	588		ug/L		94	70 - 130
n-Butylbenzene	ND		625	512		ug/L		82	70 - 130
N-Propylbenzene	ND		625	507		ug/L		81	70 - 130
o-Xylene	ND		625	577		ug/L		92	70 - 130
sec-Butylbenzene	ND		625	531		ug/L		85	70 - 130
Styrene	ND		625	568		ug/L		91	70 - 130
Tert-amyl methyl ether	ND		625	582		ug/L		93	70 - 130
Tert-butyl ethyl ether	ND		625	562		ug/L		90	70 - 130
tert-Butylbenzene	ND		625	576		ug/L		92	70 - 130
Tetrachloroethene	ND		625	653		ug/L		105	70 - 130
Tetrahydrofuran	ND		3130	2490		ug/L		80	70 - 130
Toluene	ND		625	576		ug/L		92	70 - 130
trans-1,2-Dichloroethene	ND		625	591		ug/L		95	70 - 130
trans-1,3-Dichloropropene	ND		625	479		ug/L		77	70 - 130
Trichloroethene	ND		625	585		ug/L		94	70 - 130
Trichlorofluoromethane	ND		625	570		ug/L		91	70 - 130
Vinyl chloride	ND		625	588		ug/L		90	70 - 130
Dibromomethane	ND		625	594		ug/L		95	70 - 130

Surrogate	*MS %Recovery*	*MS Qualifier*	*Limits*
Toluene-d8 (Surr)	*96*		*70 - 130*
1,2-Dichloroethane-d4 (Surr)	*82*		*70 - 130*
4-Bromofluorobenzene (Surr)	*107*		*70 - 130*

Lab Sample ID: 480-35387-7 MSD
Matrix: Water
Analysis Batch: 111019

Client Sample ID: MW-265M-2013 0329-01
Prep Type: Total/NA

Analyte	Sample Result	Sample Qualifier	Spike Added	MSD Result	MSD Qualifier	Unit	D	%Rec	%Rec. Limits	RPD	RPD Limit
1,1,1,2-Tetrachloroethane	ND		625	578		ug/L		93	70 - 130	3	20
1,1,1-Trichloroethane	ND		625	484		ug/L		77	70 - 130	4	20
1,1,2,2-Tetrachloroethane	ND		625	557		ug/L		89	70 - 130	2	20
1,1,2-Trichloroethane	ND		625	559		ug/L		89	70 - 130	3	20
1,1-Dichloroethane	ND		625	535		ug/L		86	70 - 130	2	20
1,1-Dichloroethene	ND		625	556		ug/L		89	70 - 130	4	20
1,1-Dichloropropene	ND		625	537		ug/L		86	70 - 130	5	20
1,2,3-Trichlorobenzene	ND		625	633		ug/L		101	70 - 130	2	20
1,2,3-Trichloropropane	ND		625	559		ug/L		89	70 - 130	2	20
1,2,4-Trichlorobenzene	ND		625	626		ug/L		100	70 - 130	2	20
1,2,4-Trimethylbenzene	ND		625	521		ug/L		83	70 - 130	1	20
1,2-Dibromo-3-Chloropropane	ND		625	520		ug/L		83	70 - 130	1	20
1,2-Dichlorobenzene	ND		625	566		ug/L		91	70 - 130	1	20
1,2-Dichloroethane	ND		625	468		ug/L		75	70 - 130	4	20

Method: 8260C - Volatile Organic Compounds (GC/MS) (Continued)

Lab Sample ID: 480-35387-7 MSD
Matrix: Water
Analysis Batch: 111019

Client Sample ID: MW-265M-2013 0329-01
Prep Type: Total/NA

Analyte	Sample Result	Sample Qualifier	Spike Added	MSD Result	MSD Qualifier	Unit	D	%Rec	%Rec. Limits	RPD	RPD Limit
1,2-Dichloropropane	ND		625	538		ug/L		86	70 - 130	4	20
1,3,5-Trimethylbenzene	ND		625	517		ug/L		83	70 - 130	3	20
1,3-Dichlorobenzene	ND		625	565		ug/L		90	70 - 130	1	20
1,3-Dichloropropane	ND		625	541		ug/L		87	70 - 130	3	20
1,4-Dichlorobenzene	ND		625	570		ug/L		91	70 - 130	4	20
1,4-Dioxane	ND		25000	23600		ug/L		94	70 - 130	12	20
2,2-Dichloropropane	ND		625	381	F	ug/L		61	70 - 130	4	20
2-Butanone (MEK)	ND		3130	3720		ug/L		116	70 - 130	4	20
2-Chlorotoluene	ND		625	529		ug/L		85	70 - 130	3	20
2-Hexanone	ND		3130	2360		ug/L		76	70 - 130	1	20
4-Chlorotoluene	ND		625	451		ug/L		72	70 - 130	3	20
4-Isopropyltoluene	ND		625	544		ug/L		87	70 - 130	1	20
4-Methyl-2-pentanone (MIBK)	ND		3130	2360		ug/L		75	70 - 130	4	20
Acetone	7500		3130	8220	F	ug/L		22	70 - 130	7	20
Benzene	ND		625	552		ug/L		88	70 - 130	3	20
Bromobenzene	ND		625	559		ug/L		89	70 - 130	3	20
Bromoform	ND		625	448		ug/L		72	70 - 130	9	20
Bromomethane	ND		625	545		ug/L		87	70 - 130	3	20
Carbon disulfide	ND		625	423	F	ug/L		68	70 - 130	3	20
Carbon tetrachloride	ND		625	494		ug/L		79	70 - 130	3	20
Chlorobenzene	ND		625	569		ug/L		91	70 - 130	4	20
Chlorobromomethane	ND		625	625		ug/L		100	70 - 130	4	20
Chlorodibromomethane	ND		625	500		ug/L		80	70 - 130	2	20
Chloroethane	ND		625	505		ug/L		81	70 - 130	0	20
Chloroform	ND		625	519		ug/L		83	70 - 130	4	20
Chloromethane	ND		625	555		ug/L		89	70 - 130	4	20
cis-1,2-Dichloroethene	31		625	610		ug/L		93	70 - 130	1	20
cis-1,3-Dichloropropene	ND		625	515		ug/L		82	70 - 130	2	20
Dichlorobromomethane	ND		625	483		ug/L		77	70 - 130	3	20
Dichlorodifluoromethane	ND		1250	1220		ug/L		98	70 - 130	2	20
Ethyl ether	ND		625	544		ug/L		87	70 - 130	1	20
Ethylbenzene	ND		625	533		ug/L		85	70 - 130	3	20
Ethylene Dibromide	ND		625	573		ug/L		92	70 - 130	1	20
Hexachlorobutadiene	ND		625	618		ug/L		99	70 - 130	0	20
Isopropyl ether	ND		625	536		ug/L		86	70 - 130	3	20
Isopropylbenzene	ND		625	515		ug/L		82	70 - 130	2	20
Methyl tert-butyl ether	ND		625	517		ug/L		83	70 - 130	0	20
Methylene Chloride	ND		625	536		ug/L		86	70 - 130	1	20
m-Xylene & p-Xylene	ND		1250	1100		ug/L		88	70 - 130	4	20
Naphthalene	ND		625	584		ug/L		93	70 - 130	1	20
n-Butylbenzene	ND		625	502		ug/L		80	70 - 130	2	20
N-Propylbenzene	ND		625	495		ug/L		79	70 - 130	3	20
o-Xylene	ND		625	566		ug/L		91	70 - 130	2	20
sec-Butylbenzene	ND		625	526		ug/L		84	70 - 130	1	20
Styrene	ND		625	545		ug/L		87	70 - 130	4	20
Tert-amyl methyl ether	ND		625	577		ug/L		92	70 - 130	1	20
Tert-butyl ethyl ether	ND		625	550		ug/L		88	70 - 130	2	20
tert-Butylbenzene	ND		625	551		ug/L		88	70 - 130	4	20

Method: 8260C - Volatile Organic Compounds (GC/MS) (Continued)

Lab Sample ID: 480-35387-7 MSD
Matrix: Water
Analysis Batch: 111019

Client Sample ID: MW-265M-2013 0329-01
Prep Type: Total/NA

Analyte	Sample Result	Sample Qualifier	Spike Added	MSD Result	MSD Qualifier	Unit	D	%Rec	%Rec. Limits	RPD	RPD Limit
Tetrachloroethene	ND		625	632		ug/L		101	70 - 130	3	20
Tetrahydrofuran	ND		3130	2540		ug/L		81	70 - 130	2	20
Toluene	ND		625	543		ug/L		87	70 - 130	6	20
trans-1,2-Dichloroethene	ND		625	560		ug/L		90	70 - 130	5	20
trans-1,3-Dichloropropene	ND		625	471		ug/L		75	70 - 130	2	20
Trichloroethene	ND		625	564		ug/L		90	70 - 130	4	20
Trichlorofluoromethane	ND		625	537		ug/L		86	70 - 130	6	20
Vinyl chloride	ND		625	561		ug/L		86	70 - 130	5	20
Dibromomethane	ND		625	572		ug/L		91	70 - 130	4	20

Surrogate	*MSD %Recovery*	*MSD Qualifier*	*Limits*
Toluene-d8 (Surr)	*95*		*70 - 130*
1,2-Dichloroethane-d4 (Surr)	*82*		*70 - 130*
4-Bromofluorobenzene (Surr)	*108*		*70 - 130*

Lab Sample ID: MB 480-111112/7
Matrix: Water
Analysis Batch: 111112

Client Sample ID: Method Blank
Prep Type: Total/NA

Analyte	MB Result	MB Qualifier	RL	MDL	Unit	D	Prepared	Analyzed	Dil Fac
1,1,1,2-Tetrachloroethane	ND		1.0		ug/L			04/05/13 12:28	1
1,1,1-Trichloroethane	ND		1.0		ug/L			04/05/13 12:28	1
1,1,2,2-Tetrachloroethane	ND		0.50		ug/L			04/05/13 12:28	1
1,1,2-Trichloroethane	ND		1.0		ug/L			04/05/13 12:28	1
1,1-Dichloroethane	ND		1.0		ug/L			04/05/13 12:28	1
1,1-Dichloroethene	ND		1.0		ug/L			04/05/13 12:28	1
1,1-Dichloropropene	ND		1.0		ug/L			04/05/13 12:28	1
1,2,3-Trichlorobenzene	ND		1.0		ug/L			04/05/13 12:28	1
1,2,3-Trichloropropane	ND		1.0		ug/L			04/05/13 12:28	1
1,2,4-Trichlorobenzene	ND		1.0		ug/L			04/05/13 12:28	1
1,2,4-Trimethylbenzene	ND		1.0		ug/L			04/05/13 12:28	1
1,2-Dibromo-3-Chloropropane	ND		5.0		ug/L			04/05/13 12:28	1
1,2-Dichlorobenzene	ND		1.0		ug/L			04/05/13 12:28	1
1,2-Dichloroethane	ND		1.0		ug/L			04/05/13 12:28	1
1,2-Dichloropropane	ND		1.0		ug/L			04/05/13 12:28	1
1,3,5-Trimethylbenzene	ND		1.0		ug/L			04/05/13 12:28	1
1,3-Dichlorobenzene	ND		1.0		ug/L			04/05/13 12:28	1
1,3-Dichloropropane	ND		1.0		ug/L			04/05/13 12:28	1
1,4-Dichlorobenzene	ND		1.0		ug/L			04/05/13 12:28	1
1,4-Dioxane	ND		50		ug/L			04/05/13 12:28	1
2,2-Dichloropropane	ND		1.0		ug/L			04/05/13 12:28	1
2-Butanone (MEK)	ND		10		ug/L			04/05/13 12:28	1
2-Chlorotoluene	ND		1.0		ug/L			04/05/13 12:28	1
2-Hexanone	ND		10		ug/L			04/05/13 12:28	1
4-Chlorotoluene	ND		1.0		ug/L			04/05/13 12:28	1
4-Isopropyltoluene	ND		1.0		ug/L			04/05/13 12:28	1
4-Methyl-2-pentanone (MIBK)	ND		10		ug/L			04/05/13 12:28	1
Acetone	ND		50		ug/L			04/05/13 12:28	1

Method: 8260C - Volatile Organic Compounds (GC/MS) (Continued)

Lab Sample ID: MB 480-111112/7
Matrix: Water
Analysis Batch: 111112

Client Sample ID: Method Blank
Prep Type: Total/NA

Analyte	MB Result	MB Qualifier	RL	MDL	Unit	D	Prepared	Analyzed	Dil Fac
Benzene	ND		1.0		ug/L			04/05/13 12:28	1
Bromobenzene	ND		1.0		ug/L			04/05/13 12:28	1
Bromoform	ND		1.0		ug/L			04/05/13 12:28	1
Bromomethane	ND		2.0		ug/L			04/05/13 12:28	1
Carbon disulfide	ND		10		ug/L			04/05/13 12:28	1
Carbon tetrachloride	ND		1.0		ug/L			04/05/13 12:28	1
Chlorobenzene	ND		1.0		ug/L			04/05/13 12:28	1
Chlorobromomethane	ND		1.0		ug/L			04/05/13 12:28	1
Chlorodibromomethane	ND		0.50		ug/L			04/05/13 12:28	1
Chloroethane	ND		2.0		ug/L			04/05/13 12:28	1
Chloroform	ND		1.0		ug/L			04/05/13 12:28	1
Chloromethane	ND		2.0		ug/L			04/05/13 12:28	1
cis-1,2-Dichloroethene	ND		1.0		ug/L			04/05/13 12:28	1
cis-1,3-Dichloropropene	ND		0.40		ug/L			04/05/13 12:28	1
Dichlorobromomethane	ND		0.50		ug/L			04/05/13 12:28	1
Dichlorodifluoromethane	ND		1.0		ug/L			04/05/13 12:28	1
Ethyl ether	ND		1.0		ug/L			04/05/13 12:28	1
Ethylbenzene	ND		1.0		ug/L			04/05/13 12:28	1
Ethylene Dibromide	ND		1.0		ug/L			04/05/13 12:28	1
Hexachlorobutadiene	ND		0.40		ug/L			04/05/13 12:28	1
Isopropyl ether	ND		10		ug/L			04/05/13 12:28	1
Isopropylbenzene	ND		1.0		ug/L			04/05/13 12:28	1
Methyl tert-butyl ether	ND		1.0		ug/L			04/05/13 12:28	1
Methylene Chloride	ND		1.0		ug/L			04/05/13 12:28	1
m-Xylene & p-Xylene	ND		2.0		ug/L			04/05/13 12:28	1
Naphthalene	ND		5.0		ug/L			04/05/13 12:28	1
n-Butylbenzene	ND		1.0		ug/L			04/05/13 12:28	1
N-Propylbenzene	ND		1.0		ug/L			04/05/13 12:28	1
o-Xylene	ND		1.0		ug/L			04/05/13 12:28	1
sec-Butylbenzene	ND		1.0		ug/L			04/05/13 12:28	1
Styrene	ND		1.0		ug/L			04/05/13 12:28	1
Tert-amyl methyl ether	ND		5.0		ug/L			04/05/13 12:28	1
Tert-butyl ethyl ether	ND		5.0		ug/L			04/05/13 12:28	1
tert-Butylbenzene	ND		1.0		ug/L			04/05/13 12:28	1
Tetrachloroethene	ND		1.0		ug/L			04/05/13 12:28	1
Tetrahydrofuran	ND		10		ug/L			04/05/13 12:28	1
Toluene	ND		1.0		ug/L			04/05/13 12:28	1
trans-1,2-Dichloroethene	ND		1.0		ug/L			04/05/13 12:28	1
trans-1,3-Dichloropropene	ND		0.40		ug/L			04/05/13 12:28	1
Trichloroethene	ND		1.0		ug/L			04/05/13 12:28	1
Trichlorofluoromethane	ND		1.0		ug/L			04/05/13 12:28	1
Vinyl chloride	ND		1.0		ug/L			04/05/13 12:28	1
Dibromomethane	ND		1.0		ug/L			04/05/13 12:28	1

Surrogate	*MB %Recovery*	*MB Qualifier*	*Limits*	*Prepared*	*Analyzed*	*Dil Fac*
Toluene-d8 (Surr)	*95*		*70 - 130*		*04/05/13 12:28*	*1*
1,2-Dichloroethane-d4 (Surr)	*83*		*70 - 130*		*04/05/13 12:28*	*1*
4-Bromofluorobenzene (Surr)	*103*		*70 - 130*		*04/05/13 12:28*	*1*

Method: 8260C - Volatile Organic Compounds (GC/MS) (Continued)

Lab Sample ID: LCS 480-111112/4
Matrix: Water
Analysis Batch: 111112

Client Sample ID: Lab Control Sample
Prep Type: Total/NA

Analyte	Spike Added	LCS Result	LCS Qualifier	Unit	D	%Rec	%Rec. Limits
1,1,1,2-Tetrachloroethane	25.0	25.0		ug/L		100	70 - 130
1,1,1-Trichloroethane	25.0	21.2		ug/L		85	70 - 130
1,1,2,2-Tetrachloroethane	25.0	22.5		ug/L		90	70 - 130
1,1,2-Trichloroethane	25.0	24.1		ug/L		96	70 - 130
1,1-Dichloroethane	25.0	23.5		ug/L		94	70 - 130
1,1-Dichloroethene	25.0	25.7		ug/L		103	70 - 130
1,1-Dichloropropene	25.0	24.5		ug/L		98	70 - 130
1,2,3-Trichlorobenzene	25.0	27.0		ug/L		108	70 - 130
1,2,3-Trichloropropane	25.0	23.2		ug/L		93	70 - 130
1,2,4-Trichlorobenzene	25.0	27.2		ug/L		109	70 - 130
1,2,4-Trimethylbenzene	25.0	22.5		ug/L		90	70 - 130
1,2-Dibromo-3-Chloropropane	25.0	21.6		ug/L		87	70 - 130
1,2-Dichlorobenzene	25.0	23.9		ug/L		96	70 - 130
1,2-Dichloroethane	25.0	20.5		ug/L		82	70 - 130
1,2-Dichloropropane	25.0	23.7		ug/L		95	70 - 130
1,3,5-Trimethylbenzene	25.0	22.6		ug/L		90	70 - 130
1,3-Dichlorobenzene	25.0	24.1		ug/L		96	70 - 130
1,3-Dichloropropane	25.0	23.5		ug/L		94	70 - 130
1,4-Dichlorobenzene	25.0	24.2		ug/L		97	70 - 130
1,4-Dioxane	1000	905		ug/L		90	70 - 130
2,2-Dichloropropane	25.0	21.3		ug/L		85	70 - 130
2-Butanone (MEK)	125	149		ug/L		119	70 - 130
2-Chlorotoluene	25.0	23.1		ug/L		92	70 - 130
2-Hexanone	125	101		ug/L		81	70 - 130
4-Chlorotoluene	25.0	19.4		ug/L		77	70 - 130
4-Isopropyltoluene	25.0	23.3		ug/L		93	70 - 130
4-Methyl-2-pentanone (MIBK)	125	101		ug/L		81	70 - 130
Acetone	125	97.3		ug/L		78	70 - 130
Benzene	25.0	24.2		ug/L		97	70 - 130
Bromobenzene	25.0	24.5		ug/L		98	70 - 130
Bromoform	25.0	26.3		ug/L		105	70 - 130
Bromomethane	25.0	27.3		ug/L		109	70 - 130
Carbon disulfide	25.0	23.3		ug/L		93	70 - 130
Carbon tetrachloride	25.0	22.2		ug/L		89	70 - 130
Chlorobenzene	25.0	25.0		ug/L		100	70 - 130
Chlorobromomethane	25.0	27.2		ug/L		109	70 - 130
Chlorodibromomethane	25.0	24.7		ug/L		99	70 - 130
Chloroethane	25.0	22.4		ug/L		89	70 - 130
Chloroform	25.0	22.9		ug/L		91	70 - 130
Chloromethane	25.0	27.5		ug/L		110	70 - 130
cis-1,2-Dichloroethene	25.0	25.1		ug/L		101	70 - 130
cis-1,3-Dichloropropene	25.0	24.0		ug/L		96	70 - 130
Dichlorobromomethane	25.0	22.4		ug/L		90	70 - 130
Dichlorodifluoromethane	50.0	58.9		ug/L		118	70 - 130
Ethyl ether	25.0	21.6		ug/L		87	70 - 130
Ethylbenzene	25.0	23.5		ug/L		94	70 - 130
Ethylene Dibromide	25.0	24.5		ug/L		98	70 - 130
Hexachlorobutadiene	25.0	27.0		ug/L		108	70 - 130

Method: 8260C - Volatile Organic Compounds (GC/MS) (Continued)

Lab Sample ID: LCS 480-111112/4
Matrix: Water
Analysis Batch: 111112

Client Sample ID: Lab Control Sample
Prep Type: Total/NA

Analyte	Spike Added	LCS Result	LCS Qualifier	Unit	D	%Rec	%Rec. Limits
Isopropyl ether	25.0	21.6		ug/L		86	70 - 130
Isopropylbenzene	25.0	22.5		ug/L		90	70 - 130
Methyl tert-butyl ether	25.0	23.2		ug/L		93	70 - 130
Methylene Chloride	25.0	23.4		ug/L		94	70 - 130
m-Xylene & p-Xylene	50.0	48.7		ug/L		97	70 - 130
Naphthalene	25.0	24.4		ug/L		97	70 - 130
n-Butylbenzene	25.0	21.6		ug/L		86	70 - 130
N-Propylbenzene	25.0	21.8		ug/L		87	70 - 130
o-Xylene	25.0	24.4		ug/L		97	70 - 130
sec-Butylbenzene	25.0	22.9		ug/L		91	70 - 130
Styrene	25.0	24.2		ug/L		97	70 - 130
Tert-amyl methyl ether	25.0	23.3		ug/L		93	70 - 130
Tert-butyl ethyl ether	25.0	21.9		ug/L		88	70 - 130
tert-Butylbenzene	25.0	23.5		ug/L		94	70 - 130
Tetrachloroethene	25.0	28.0		ug/L		112	70 - 130
Tetrahydrofuran	125	107		ug/L		85	70 - 130
Toluene	25.0	24.0		ug/L		96	70 - 130
trans-1,2-Dichloroethene	25.0	25.3		ug/L		101	70 - 130
trans-1,3-Dichloropropene	25.0	21.8		ug/L		87	70 - 130
Trichloroethene	25.0	24.7		ug/L		99	70 - 130
Trichlorofluoromethane	25.0	25.6		ug/L		102	70 - 130
Vinyl chloride	25.0	25.7		ug/L		103	70 - 130
Dibromomethane	25.0	24.2		ug/L		97	70 - 130

Surrogate	*LCS %Recovery*	*LCS Qualifier*	*Limits*
Toluene-d8 (Surr)	*94*		*70 - 130*
1,2-Dichloroethane-d4 (Surr)	*80*		*70 - 130*
4-Bromofluorobenzene (Surr)	*105*		*70 - 130*

Lab Sample ID: LCSD 480-111112/5
Matrix: Water
Analysis Batch: 111112

Client Sample ID: Lab Control Sample Dup
Prep Type: Total/NA

Analyte	Spike Added	LCSD Result	LCSD Qualifier	Unit	D	%Rec	%Rec. Limits	RPD	RPD Limit
1,1,1,2-Tetrachloroethane	25.0	24.7		ug/L		99	70 - 130	1	20
1,1,1-Trichloroethane	25.0	20.8		ug/L		83	70 - 130	2	20
1,1,2,2-Tetrachloroethane	25.0	22.9		ug/L		92	70 - 130	2	20
1,1,2-Trichloroethane	25.0	23.6		ug/L		94	70 - 130	2	20
1,1-Dichloroethane	25.0	22.3		ug/L		89	70 - 130	5	20
1,1-Dichloroethene	25.0	24.3		ug/L		97	70 - 130	6	20
1,1-Dichloropropene	25.0	23.2		ug/L		93	70 - 130	5	20
1,2,3-Trichlorobenzene	25.0	27.5		ug/L		110	70 - 130	2	20
1,2,3-Trichloropropane	25.0	23.3		ug/L		93	70 - 130	1	20
1,2,4-Trichlorobenzene	25.0	27.1		ug/L		108	70 - 130	0	20
1,2,4-Trimethylbenzene	25.0	22.0		ug/L		88	70 - 130	2	20
1,2-Dibromo-3-Chloropropane	25.0	22.3		ug/L		89	70 - 130	3	20
1,2-Dichlorobenzene	25.0	24.2		ug/L		97	70 - 130	1	20
1,2-Dichloroethane	25.0	20.5		ug/L		82	70 - 130	0	20

Method: 8260C - Volatile Organic Compounds (GC/MS) (Continued)

Lab Sample ID: LCSD 480-111112/5
Matrix: Water
Analysis Batch: 111112

Client Sample ID: Lab Control Sample Dup
Prep Type: Total/NA

Analyte	Spike Added	LCSD Result	LCSD Qualifier	Unit	D	%Rec	%Rec. Limits	RPD	RPD Limit
1,2-Dichloropropane	25.0	23.0		ug/L		92	70 - 130	3	20
1,3,5-Trimethylbenzene	25.0	22.0		ug/L		88	70 - 130	2	20
1,3-Dichlorobenzene	25.0	24.2		ug/L		97	70 - 130	0	20
1,3-Dichloropropane	25.0	23.0		ug/L		92	70 - 130	2	20
1,4-Dichlorobenzene	25.0	23.6		ug/L		94	70 - 130	3	20
1,4-Dioxane	1000	909		ug/L		91	70 - 130	0	20
2,2-Dichloropropane	25.0	20.7		ug/L		83	70 - 130	3	20
2-Butanone (MEK)	125	150		ug/L		120	70 - 130	1	20
2-Chlorotoluene	25.0	22.7		ug/L		91	70 - 130	2	20
2-Hexanone	125	101		ug/L		81	70 - 130	0	20
4-Chlorotoluene	25.0	19.1		ug/L		77	70 - 130	1	20
4-Isopropyltoluene	25.0	22.7		ug/L		91	70 - 130	3	20
4-Methyl-2-pentanone (MIBK)	125	100		ug/L		80	70 - 130	1	20
Acetone	125	96.7		ug/L		77	70 - 130	1	20
Benzene	25.0	23.2		ug/L		93	70 - 130	4	20
Bromobenzene	25.0	24.2		ug/L		97	70 - 130	1	20
Bromoform	25.0	26.3		ug/L		105	70 - 130	0	20
Bromomethane	25.0	26.6		ug/L		106	70 - 130	3	20
Carbon disulfide	25.0	22.6		ug/L		90	70 - 130	3	20
Carbon tetrachloride	25.0	21.7		ug/L		87	70 - 130	2	20
Chlorobenzene	25.0	24.4		ug/L		97	70 - 130	3	20
Chlorobromomethane	25.0	26.2		ug/L		105	70 - 130	4	20
Chlorodibromomethane	25.0	24.6		ug/L		98	70 - 130	0	20
Chloroethane	25.0	22.2		ug/L		89	70 - 130	1	20
Chloroform	25.0	22.3		ug/L		89	70 - 130	2	20
Chloromethane	25.0	26.4		ug/L		105	70 - 130	4	20
cis-1,2-Dichloroethene	25.0	24.6		ug/L		98	70 - 130	2	20
cis-1,3-Dichloropropene	25.0	23.5		ug/L		94	70 - 130	2	20
Dichlorobromomethane	25.0	22.2		ug/L		89	70 - 130	1	20
Dichlorodifluoromethane	50.0	55.3		ug/L		111	70 - 130	6	20
Ethyl ether	25.0	21.8		ug/L		87	70 - 130	1	20
Ethylbenzene	25.0	22.6		ug/L		90	70 - 130	4	20
Ethylene Dibromide	25.0	24.3		ug/L		97	70 - 130	1	20
Hexachlorobutadiene	25.0	27.4		ug/L		110	70 - 130	2	20
Isopropyl ether	25.0	20.7		ug/L		83	70 - 130	4	20
Isopropylbenzene	25.0	21.8		ug/L		87	70 - 130	3	20
Methyl tert-butyl ether	25.0	22.8		ug/L		91	70 - 130	1	20
Methylene Chloride	25.0	23.1		ug/L		92	70 - 130	1	20
m-Xylene & p-Xylene	50.0	46.9		ug/L		94	70 - 130	4	20
Naphthalene	25.0	25.3		ug/L		101	70 - 130	4	20
n-Butylbenzene	25.0	21.3		ug/L		85	70 - 130	1	20
N-Propylbenzene	25.0	21.2		ug/L		85	70 - 130	3	20
o-Xylene	25.0	23.5		ug/L		94	70 - 130	4	20
sec-Butylbenzene	25.0	22.0		ug/L		88	70 - 130	4	20
Styrene	25.0	23.7		ug/L		95	70 - 130	2	20
Tert-amyl methyl ether	25.0	23.0		ug/L		92	70 - 130	1	20
Tert-butyl ethyl ether	25.0	21.6		ug/L		86	70 - 130	2	20
tert-Butylbenzene	25.0	23.9		ug/L		96	70 - 130	2	20

Method: 8260C - Volatile Organic Compounds (GC/MS) (Continued)

Lab Sample ID: LCSD 480-111112/5
Matrix: Water
Analysis Batch: 111112

Client Sample ID: Lab Control Sample Dup
Prep Type: Total/NA

Analyte	Spike Added	LCSD Result	LCSD Qualifier	Unit	D	%Rec	%Rec. Limits	RPD	RPD Limit
Tetrachloroethene	25.0	27.1		ug/L		108	70 - 130	3	20
Tetrahydrofuran	125	107		ug/L		85	70 - 130	0	20
Toluene	25.0	23.5		ug/L		94	70 - 130	2	20
trans-1,2-Dichloroethene	25.0	24.1		ug/L		96	70 - 130	5	20
trans-1,3-Dichloropropene	25.0	21.7		ug/L		87	70 - 130	0	20
Trichloroethene	25.0	23.5		ug/L		94	70 - 130	5	20
Trichlorofluoromethane	25.0	24.7		ug/L		99	70 - 130	3	20
Vinyl chloride	25.0	24.5		ug/L		98	70 - 130	5	20
Dibromomethane	25.0	24.6		ug/L		98	70 - 130	2	20

Surrogate	*LCSD %Recovery*	*LCSD Qualifier*	*Limits*
Toluene-d8 (Surr)	*94*		*70 - 130*
1,2-Dichloroethane-d4 (Surr)	*80*		*70 - 130*
4-Bromofluorobenzene (Surr)	*107*		*70 - 130*

Lab Sample ID: MB 480-111260/7
Matrix: Water
Analysis Batch: 111260

Client Sample ID: Method Blank
Prep Type: Total/NA

Analyte	MB Result	MB Qualifier	RL	MDL	Unit	D	Prepared	Analyzed	Dil Fac
1,1,1,2-Tetrachloroethane	ND		1.0		ug/L			04/05/13 23:35	1
1,1,1-Trichloroethane	ND		1.0		ug/L			04/05/13 23:35	1
1,1,2,2-Tetrachloroethane	ND		0.50		ug/L			04/05/13 23:35	1
1,1,2-Trichloroethane	ND		1.0		ug/L			04/05/13 23:35	1
1,1-Dichloroethane	ND		1.0		ug/L			04/05/13 23:35	1
1,1-Dichloroethene	ND		1.0		ug/L			04/05/13 23:35	1
1,1-Dichloropropene	ND		1.0		ug/L			04/05/13 23:35	1
1,2,3-Trichlorobenzene	ND		1.0		ug/L			04/05/13 23:35	1
1,2,3-Trichloropropane	ND		1.0		ug/L			04/05/13 23:35	1
1,2,4-Trichlorobenzene	ND		1.0		ug/L			04/05/13 23:35	1
1,2,4-Trimethylbenzene	ND		1.0		ug/L			04/05/13 23:35	1
1,2-Dibromo-3-Chloropropane	ND		5.0		ug/L			04/05/13 23:35	1
1,2-Dichlorobenzene	ND		1.0		ug/L			04/05/13 23:35	1
1,2-Dichloroethane	ND		1.0		ug/L			04/05/13 23:35	1
1,2-Dichloropropane	ND		1.0		ug/L			04/05/13 23:35	1
1,3,5-Trimethylbenzene	ND		1.0		ug/L			04/05/13 23:35	1
1,3-Dichlorobenzene	ND		1.0		ug/L			04/05/13 23:35	1
1,3-Dichloropropane	ND		1.0		ug/L			04/05/13 23:35	1
1,4-Dichlorobenzene	ND		1.0		ug/L			04/05/13 23:35	1
1,4-Dioxane	ND		50		ug/L			04/05/13 23:35	1
2,2-Dichloropropane	ND		1.0		ug/L			04/05/13 23:35	1
2-Butanone (MEK)	ND		10		ug/L			04/05/13 23:35	1
2-Chlorotoluene	ND		1.0		ug/L			04/05/13 23:35	1
2-Hexanone	ND		10		ug/L			04/05/13 23:35	1
4-Chlorotoluene	ND		1.0		ug/L			04/05/13 23:35	1
4-Isopropyltoluene	ND		1.0		ug/L			04/05/13 23:35	1
4-Methyl-2-pentanone (MIBK)	ND		10		ug/L			04/05/13 23:35	1
Acetone	ND		50		ug/L			04/05/13 23:35	1

Method: 8260C - Volatile Organic Compounds (GC/MS) (Continued)

Lab Sample ID: MB 480-111260/7
Matrix: Water
Analysis Batch: 111260

Client Sample ID: Method Blank
Prep Type: Total/NA

Analyte	MB Result	MB Qualifier	RL	MDL	Unit	D	Prepared	Analyzed	Dil Fac
Benzene	ND		1.0		ug/L			04/05/13 23:35	1
Bromobenzene	ND		1.0		ug/L			04/05/13 23:35	1
Bromoform	ND		1.0		ug/L			04/05/13 23:35	1
Bromomethane	ND		2.0		ug/L			04/05/13 23:35	1
Carbon disulfide	ND		10		ug/L			04/05/13 23:35	1
Carbon tetrachloride	ND		1.0		ug/L			04/05/13 23:35	1
Chlorobenzene	ND		1.0		ug/L			04/05/13 23:35	1
Chlorobromomethane	ND		1.0		ug/L			04/05/13 23:35	1
Chlorodibromomethane	ND		0.50		ug/L			04/05/13 23:35	1
Chloroethane	ND		2.0		ug/L			04/05/13 23:35	1
Chloroform	ND		1.0		ug/L			04/05/13 23:35	1
Chloromethane	ND		2.0		ug/L			04/05/13 23:35	1
cis-1,2-Dichloroethene	ND		1.0		ug/L			04/05/13 23:35	1
cis-1,3-Dichloropropene	ND		0.40		ug/L			04/05/13 23:35	1
Dichlorobromomethane	ND		0.50		ug/L			04/05/13 23:35	1
Dichlorodifluoromethane	ND		1.0		ug/L			04/05/13 23:35	1
Ethyl ether	ND		1.0		ug/L			04/05/13 23:35	1
Ethylbenzene	ND		1.0		ug/L			04/05/13 23:35	1
Ethylene Dibromide	ND		1.0		ug/L			04/05/13 23:35	1
Hexachlorobutadiene	ND		0.40		ug/L			04/05/13 23:35	1
Isopropyl ether	ND		10		ug/L			04/05/13 23:35	1
Isopropylbenzene	ND		1.0		ug/L			04/05/13 23:35	1
Methyl tert-butyl ether	ND		1.0		ug/L			04/05/13 23:35	1
Methylene Chloride	ND		1.0		ug/L			04/05/13 23:35	1
m-Xylene & p-Xylene	ND		2.0		ug/L			04/05/13 23:35	1
Naphthalene	ND		5.0		ug/L			04/05/13 23:35	1
n-Butylbenzene	ND		1.0		ug/L			04/05/13 23:35	1
N-Propylbenzene	ND		1.0		ug/L			04/05/13 23:35	1
o-Xylene	ND		1.0		ug/L			04/05/13 23:35	1
sec-Butylbenzene	ND		1.0		ug/L			04/05/13 23:35	1
Styrene	ND		1.0		ug/L			04/05/13 23:35	1
Tert-amyl methyl ether	ND		5.0		ug/L			04/05/13 23:35	1
Tert-butyl ethyl ether	ND		5.0		ug/L			04/05/13 23:35	1
tert-Butylbenzene	ND		1.0		ug/L			04/05/13 23:35	1
Tetrachloroethene	ND		1.0		ug/L			04/05/13 23:35	1
Tetrahydrofuran	ND		10		ug/L			04/05/13 23:35	1
Toluene	ND		1.0		ug/L			04/05/13 23:35	1
trans-1,2-Dichloroethene	ND		1.0		ug/L			04/05/13 23:35	1
trans-1,3-Dichloropropene	ND		0.40		ug/L			04/05/13 23:35	1
Trichloroethene	ND		1.0		ug/L			04/05/13 23:35	1
Trichlorofluoromethane	ND		1.0		ug/L			04/05/13 23:35	1
Vinyl chloride	ND		1.0		ug/L			04/05/13 23:35	1
Dibromomethane	ND		1.0		ug/L			04/05/13 23:35	1

Surrogate	*MB %Recovery*	*MB Qualifier*	*Limits*	*Prepared*	*Analyzed*	*Dil Fac*
Toluene-d8 (Surr)	*97*		*70 - 130*		*04/05/13 23:35*	*1*
1,2-Dichloroethane-d4 (Surr)	*81*		*70 - 130*		*04/05/13 23:35*	*1*
4-Bromofluorobenzene (Surr)	*103*		*70 - 130*		*04/05/13 23:35*	*1*

Method: 8260C - Volatile Organic Compounds (GC/MS) (Continued)

Lab Sample ID: LCS 480-111260/4
Matrix: Water
Analysis Batch: 111260

Client Sample ID: Lab Control Sample
Prep Type: Total/NA

Analyte	Spike Added	LCS Result	LCS Qualifier	Unit	D	%Rec	%Rec. Limits
1,1,1,2-Tetrachloroethane	25.0	23.6		ug/L		94	70 - 130
1,1,1-Trichloroethane	25.0	20.7		ug/L		83	70 - 130
1,1,2,2-Tetrachloroethane	25.0	22.0		ug/L		88	70 - 130
1,1,2-Trichloroethane	25.0	22.6		ug/L		91	70 - 130
1,1-Dichloroethane	25.0	22.1		ug/L		88	70 - 130
1,1-Dichloroethene	25.0	24.2		ug/L		97	70 - 130
1,1-Dichloropropene	25.0	23.1		ug/L		92	70 - 130
1,2,3-Trichlorobenzene	25.0	25.8		ug/L		103	70 - 130
1,2,3-Trichloropropane	25.0	22.4		ug/L		89	70 - 130
1,2,4-Trichlorobenzene	25.0	25.8		ug/L		103	70 - 130
1,2,4-Trimethylbenzene	25.0	21.5		ug/L		86	70 - 130
1,2-Dibromo-3-Chloropropane	25.0	20.5		ug/L		82	70 - 130
1,2-Dichlorobenzene	25.0	23.2		ug/L		93	70 - 130
1,2-Dichloroethane	25.0	19.4		ug/L		77	70 - 130
1,2-Dichloropropane	25.0	22.5		ug/L		90	70 - 130
1,3,5-Trimethylbenzene	25.0	21.5		ug/L		86	70 - 130
1,3-Dichlorobenzene	25.0	23.0		ug/L		92	70 - 130
1,3-Dichloropropane	25.0	21.6		ug/L		87	70 - 130
1,4-Dichlorobenzene	25.0	23.1		ug/L		92	70 - 130
1,4-Dioxane	1000	1120		ug/L		112	70 - 130
2,2-Dichloropropane	25.0	20.8		ug/L		83	70 - 130
2-Butanone (MEK)	125	141		ug/L		113	70 - 130
2-Chlorotoluene	25.0	22.3		ug/L		89	70 - 130
2-Hexanone	125	89.9		ug/L		72	70 - 130
4-Chlorotoluene	25.0	18.6		ug/L		75	70 - 130
4-Isopropyltoluene	25.0	22.4		ug/L		90	70 - 130
4-Methyl-2-pentanone (MIBK)	125	91.8		ug/L		73	70 - 130
Acetone	125	83.6	*	ug/L		67	70 - 130
Benzene	25.0	22.8		ug/L		91	70 - 130
Bromobenzene	25.0	23.3		ug/L		93	70 - 130
Bromoform	25.0	24.4		ug/L		97	70 - 130
Bromomethane	25.0	23.8		ug/L		95	70 - 130
Carbon disulfide	25.0	22.1		ug/L		88	70 - 130
Carbon tetrachloride	25.0	21.6		ug/L		86	70 - 130
Chlorobenzene	25.0	23.6		ug/L		94	70 - 130
Chlorobromomethane	25.0	26.4		ug/L		106	70 - 130
Chlorodibromomethane	25.0	23.5		ug/L		94	70 - 130
Chloroethane	25.0	20.9		ug/L		83	70 - 130
Chloroform	25.0	21.4		ug/L		85	70 - 130
Chloromethane	25.0	25.8		ug/L		103	70 - 130
cis-1,2-Dichloroethene	25.0	24.2		ug/L		97	70 - 130
cis-1,3-Dichloropropene	25.0	22.3		ug/L		89	70 - 130
Dichlorobromomethane	25.0	21.6		ug/L		86	70 - 130
Dichlorodifluoromethane	50.0	71.2	*	ug/L		142	70 - 130
Ethyl ether	25.0	23.3		ug/L		93	70 - 130
Ethylbenzene	25.0	21.9		ug/L		88	70 - 130
Ethylene Dibromide	25.0	22.6		ug/L		90	70 - 130
Hexachlorobutadiene	25.0	26.3		ug/L		105	70 - 130

Method: 8260C - Volatile Organic Compounds (GC/MS) (Continued)

Lab Sample ID: LCS 480-111260/4
Matrix: Water
Analysis Batch: 111260

Client Sample ID: Lab Control Sample
Prep Type: Total/NA

Analyte	Spike Added	LCS Result	LCS Qualifier	Unit	D	%Rec	%Rec. Limits
Isopropyl ether	25.0	22.5		ug/L		90	70 - 130
Isopropylbenzene	25.0	21.7		ug/L		87	70 - 130
Methyl tert-butyl ether	25.0	21.8		ug/L		87	70 - 130
Methylene Chloride	25.0	21.9		ug/L		88	70 - 130
m-Xylene & p-Xylene	50.0	45.6		ug/L		91	70 - 130
Naphthalene	25.0	23.2		ug/L		93	70 - 130
n-Butylbenzene	25.0	21.5		ug/L		86	70 - 130
N-Propylbenzene	25.0	20.8		ug/L		83	70 - 130
o-Xylene	25.0	22.9		ug/L		92	70 - 130
sec-Butylbenzene	25.0	22.0		ug/L		88	70 - 130
Styrene	25.0	22.5		ug/L		90	70 - 130
Tert-amyl methyl ether	25.0	22.8		ug/L		91	70 - 130
Tert-butyl ethyl ether	25.0	21.9		ug/L		88	70 - 130
tert-Butylbenzene	25.0	23.4		ug/L		94	70 - 130
Tetrachloroethene	25.0	27.0		ug/L		108	70 - 130
Tetrahydrofuran	125	97.0		ug/L		78	70 - 130
Toluene	25.0	23.0		ug/L		92	70 - 130
trans-1,2-Dichloroethene	25.0	24.1		ug/L		96	70 - 130
trans-1,3-Dichloropropene	25.0	20.6		ug/L		83	70 - 130
Trichloroethene	25.0	23.9		ug/L		96	70 - 130
Trichlorofluoromethane	25.0	24.0		ug/L		96	70 - 130
Vinyl chloride	25.0	25.3		ug/L		101	70 - 130
Dibromomethane	25.0	23.2		ug/L		93	70 - 130

Surrogate	*LCS %Recovery*	*LCS Qualifier*	*Limits*
Toluene-d8 (Surr)	*93*		*70 - 130*
1,2-Dichloroethane-d4 (Surr)	*79*		*70 - 130*
4-Bromofluorobenzene (Surr)	*103*		*70 - 130*

Lab Sample ID: LCSD 480-111260/5
Matrix: Water
Analysis Batch: 111260

Client Sample ID: Lab Control Sample Dup
Prep Type: Total/NA

Analyte	Spike Added	LCSD Result	LCSD Qualifier	Unit	D	%Rec	%Rec. Limits	RPD	RPD Limit
1,1,1,2-Tetrachloroethane	25.0	23.6		ug/L		94	70 - 130	0	20
1,1,1-Trichloroethane	25.0	20.3		ug/L		81	70 - 130	2	20
1,1,2,2-Tetrachloroethane	25.0	21.9		ug/L		88	70 - 130	0	20
1,1,2-Trichloroethane	25.0	22.9		ug/L		92	70 - 130	1	20
1,1-Dichloroethane	25.0	21.6		ug/L		86	70 - 130	2	20
1,1-Dichloroethene	25.0	23.2		ug/L		93	70 - 130	4	20
1,1-Dichloropropene	25.0	22.7		ug/L		91	70 - 130	2	20
1,2,3-Trichlorobenzene	25.0	25.9		ug/L		104	70 - 130	0	20
1,2,3-Trichloropropane	25.0	22.9		ug/L		92	70 - 130	2	20
1,2,4-Trichlorobenzene	25.0	26.7		ug/L		107	70 - 130	3	20
1,2,4-Trimethylbenzene	25.0	21.3		ug/L		85	70 - 130	1	20
1,2-Dibromo-3-Chloropropane	25.0	20.7		ug/L		83	70 - 130	1	20
1,2-Dichlorobenzene	25.0	23.4		ug/L		94	70 - 130	1	20
1,2-Dichloroethane	25.0	19.0		ug/L		76	70 - 130	2	20

Method: 8260C - Volatile Organic Compounds (GC/MS) (Continued)

Lab Sample ID: LCSD 480-111260/5
Matrix: Water
Analysis Batch: 111260

Client Sample ID: Lab Control Sample Dup
Prep Type: Total/NA

Analyte	Spike Added	LCSD Result	LCSD Qualifier	Unit	D	%Rec	%Rec. Limits	RPD	RPD Limit
1,2-Dichloropropane	25.0	21.8		ug/L		87	70 - 130	3	20
1,3,5-Trimethylbenzene	25.0	21.0		ug/L		84	70 - 130	2	20
1,3-Dichlorobenzene	25.0	23.1		ug/L		92	70 - 130	0	20
1,3-Dichloropropane	25.0	21.8		ug/L		87	70 - 130	1	20
1,4-Dichlorobenzene	25.0	23.4		ug/L		94	70 - 130	2	20
1,4-Dioxane	1000	1280		ug/L		128	70 - 130	14	20
2,2-Dichloropropane	25.0	20.8		ug/L		83	70 - 130	0	20
2-Butanone (MEK)	125	146		ug/L		117	70 - 130	3	20
2-Chlorotoluene	25.0	22.0		ug/L		88	70 - 130	1	20
2-Hexanone	125	93.5		ug/L		75	70 - 130	4	20
4-Chlorotoluene	25.0	18.5		ug/L		74	70 - 130	1	20
4-Isopropyltoluene	25.0	22.1		ug/L		89	70 - 130	1	20
4-Methyl-2-pentanone (MIBK)	125	93.6		ug/L		75	70 - 130	2	20
Acetone	125	73.3	*	ug/L		59	70 - 130	13	20
Benzene	25.0	22.6		ug/L		91	70 - 130	1	20
Bromobenzene	25.0	23.1		ug/L		92	70 - 130	1	20
Bromoform	25.0	25.1		ug/L		100	70 - 130	3	20
Bromomethane	25.0	24.6		ug/L		98	70 - 130	3	20
Carbon disulfide	25.0	21.8		ug/L		87	70 - 130	2	20
Carbon tetrachloride	25.0	21.7		ug/L		87	70 - 130	1	20
Chlorobenzene	25.0	23.5		ug/L		94	70 - 130	0	20
Chlorobromomethane	25.0	25.4		ug/L		102	70 - 130	4	20
Chlorodibromomethane	25.0	23.8		ug/L		95	70 - 130	2	20
Chloroethane	25.0	20.2		ug/L		81	70 - 130	3	20
Chloroform	25.0	21.3		ug/L		85	70 - 130	0	20
Chloromethane	25.0	25.1		ug/L		101	70 - 130	2	20
cis-1,2-Dichloroethene	25.0	23.4		ug/L		94	70 - 130	3	20
cis-1,3-Dichloropropene	25.0	22.5		ug/L		90	70 - 130	1	20
Dichlorobromomethane	25.0	21.1		ug/L		85	70 - 130	2	20
Dichlorodifluoromethane	50.0	68.8	*	ug/L		138	70 - 130	3	20
Ethyl ether	25.0	23.1		ug/L		92	70 - 130	1	20
Ethylbenzene	25.0	21.8		ug/L		87	70 - 130	0	20
Ethylene Dibromide	25.0	23.2		ug/L		93	70 - 130	3	20
Hexachlorobutadiene	25.0	26.7		ug/L		107	70 - 130	2	20
Isopropyl ether	25.0	22.9		ug/L		92	70 - 130	2	20
Isopropylbenzene	25.0	21.3		ug/L		85	70 - 130	2	20
Methyl tert-butyl ether	25.0	21.5		ug/L		86	70 - 130	2	20
Methylene Chloride	25.0	22.5		ug/L		90	70 - 130	2	20
m-Xylene & p-Xylene	50.0	46.1		ug/L		92	70 - 130	1	20
Naphthalene	25.0	24.1		ug/L		97	70 - 130	4	20
n-Butylbenzene	25.0	20.7		ug/L		83	70 - 130	4	20
N-Propylbenzene	25.0	20.6		ug/L		82	70 - 130	1	20
o-Xylene	25.0	23.2		ug/L		93	70 - 130	1	20
sec-Butylbenzene	25.0	21.3		ug/L		85	70 - 130	3	20
Styrene	25.0	22.7		ug/L		91	70 - 130	1	20
Tert-amyl methyl ether	25.0	23.5		ug/L		94	70 - 130	3	20
Tert-butyl ethyl ether	25.0	21.7		ug/L		87	70 - 130	1	20
tert-Butylbenzene	25.0	23.0		ug/L		92	70 - 130	2	20

Method: 8260C - Volatile Organic Compounds (GC/MS) (Continued)

Lab Sample ID: LCSD 480-111260/5
Matrix: Water
Analysis Batch: 111260

Client Sample ID: Lab Control Sample Dup
Prep Type: Total/NA

Analyte			Spike Added	LCSD Result	LCSD Qualifier	Unit	D	%Rec	%Rec. Limits	RPD	RPD Limit
Tetrachloroethene			25.0	26.7		ug/L		107	70 - 130	1	20
Tetrahydrofuran			125	99.1		ug/L		79	70 - 130	2	20
Toluene			25.0	22.8		ug/L		91	70 - 130	1	20
trans-1,2-Dichloroethene			25.0	24.0		ug/L		96	70 - 130	0	20
trans-1,3-Dichloropropene			25.0	21.0		ug/L		84	70 - 130	2	20
Trichloroethene			25.0	23.6		ug/L		94	70 - 130	2	20
Trichlorofluoromethane			25.0	24.4		ug/L		97	70 - 130	2	20
Vinyl chloride			25.0	24.5		ug/L		98	70 - 130	3	20
Dibromomethane			25.0	23.0		ug/L		92	70 - 130	1	20

Surrogate	*LCSD %Recovery*	*LCSD Qualifier*	*Limits*
Toluene-d8 (Surr)	*94*		*70 - 130*
1,2-Dichloroethane-d4 (Surr)	*79*		*70 - 130*
4-Bromofluorobenzene (Surr)	*109*		*70 - 130*

GC/MS VOA

Analysis Batch: 110641

Lab Sample ID	Client Sample ID	Prep Type	Matrix	Method	Prep Batch
480-35387-3	MW-261S-2013 0401	Total/NA	Water	8260B SIM	
480-35387-7	MW-265M-2013 0329-01	Total/NA	Water	8260B SIM	
480-35387-9	MW-266Ma-2013 0329-01	Total/NA	Water	8260B SIM	
480-35387-11	MW-267S-2013 0329-01	Total/NA	Water	8260B SIM	
480-35387-13	MW-268M-2013 0329-01	Total/NA	Water	8260B SIM	
480-35387-15	MW-269Ma-2013 0329-01	Total/NA	Water	8260B SIM	
480-35387-17	MW-552-2013 0329-01	Total/NA	Water	8260B SIM	
480-35387-34	DUPX2-2013 0329-01	Total/NA	Water	8260B SIM	
480-35387-36	Trip Blank	Total/NA	Water	8260B SIM	
LCS 480-110641/3	Lab Control Sample	Total/NA	Water	8260B SIM	
LCSD 480-110641/4	Lab Control Sample Dup	Total/NA	Water	8260B SIM	
MB 480-110641/5	Method Blank	Total/NA	Water	8260B SIM	

Analysis Batch: 110854

Lab Sample ID	Client Sample ID	Prep Type	Matrix	Method	Prep Batch
480-35387-1	DEP-19M-2013 0401-01	Total/NA	Water	8260C	
480-35387-2	DEP-21-2013 0401-01	Total/NA	Water	8260C	
480-35387-3	MW-261S-2013 0401	Total/NA	Water	8260C	
480-35387-4	MW-263M-2013 0401	Total/NA	Water	8260C	
480-35387-5	MW-264M-2013 0401	Total/NA	Water	8260C	
480-35387-7	MW-265M-2013 0329-01	Total/NA	Water	8260C	
480-35387-8	MW-265D-2013 0401-01	Total/NA	Water	8260C	
480-35387-9	MW-266Ma-2013 0329-01	Total/NA	Water	8260C	
480-35387-12	MW-267M-2013 0329-01	Total/NA	Water	8260C	
480-35387-14	MW-268D-2013 0401	Total/NA	Water	8260C	
480-35387-15	MW-269Ma-2013 0329-01	Total/NA	Water	8260C	
480-35387-16	MW-551-2013 0329-01	Total/NA	Water	8260C	
480-35387-18	MW-553-2013 0329-01	Total/NA	Water	8260C	
480-35387-19	MW-560-2013 0329-01	Total/NA	Water	8260C	
LCS 480-110854/4	Lab Control Sample	Total/NA	Water	8260C	
LCSD 480-110854/5	Lab Control Sample Dup	Total/NA	Water	8260C	
MB 480-110854/7	Method Blank	Total/NA	Water	8260C	

Analysis Batch: 111019

Lab Sample ID	Client Sample ID	Prep Type	Matrix	Method	Prep Batch
480-35387-6	MW-265S-2013 0401	Total/NA	Water	8260C	
480-35387-7 - DL	MW-265M-2013 0329-01	Total/NA	Water	8260C	
480-35387-7 MS	MW-265M-2013 0329-01	Total/NA	Water	8260C	
480-35387-7 MSD	MW-265M-2013 0329-01	Total/NA	Water	8260C	
480-35387-10	MW-266Mb-2013 0401-01	Total/NA	Water	8260C	
480-35387-11	MW-267S-2013 0329-01	Total/NA	Water	8260C	
480-35387-12 - DL	MW-267M-2013 0329-01	Total/NA	Water	8260C	
480-35387-13	MW-268M-2013 0329-01	Total/NA	Water	8260C	
480-35387-16 - DL	MW-551-2013 0329-01	Total/NA	Water	8260C	
480-35387-17	MW-552-2013 0329-01	Total/NA	Water	8260C	
480-35387-18 - DL	MW-553-2013 0329-01	Total/NA	Water	8260C	
480-35387-22	MW-563-2013 0329-01	Total/NA	Water	8260C	
480-35387-23	REW-1-2013 0328-01	Total/NA	Water	8260C	
480-35387-24	REW-4-2013 0328-01	Total/NA	Water	8260C	
480-35387-25	REW-5-2013 0328-01	Total/NA	Water	8260C	
480-35387-26	REW-6-2013 0329-01	Total/NA	Water	8260C	

GC/MS VOA (Continued)

Analysis Batch: 111019 (Continued)

Lab Sample ID	Client Sample ID	Prep Type	Matrix	Method	Prep Batch
480-35387-27	REW-7-2013 0401-01	Total/NA	Water	8260C	
480-35387-28	REW-8-2013 0328-01	Total/NA	Water	8260C	
LCS 480-111019/4	Lab Control Sample	Total/NA	Water	8260C	
LCSD 480-111019/5	Lab Control Sample Dup	Total/NA	Water	8260C	
MB 480-111019/7	Method Blank	Total/NA	Water	8260C	

Analysis Batch: 111112

Lab Sample ID	Client Sample ID	Prep Type	Matrix	Method	Prep Batch
480-35387-20	MW-561-2013 0329-01	Total/NA	Water	8260C	
480-35387-21	MW-562-2013 0329-01	Total/NA	Water	8260C	
480-35387-24 - DL	REW-4-2013 0328-01	Total/NA	Water	8260C	
480-35387-29	REW-9-2013 0328-01	Total/NA	Water	8260C	
480-35387-30	REW-10-2013 0328-01	Total/NA	Water	8260C	
480-35387-31	REW-11-2013 0329-01	Total/NA	Water	8260C	
480-35387-32	REW-12-2013 0328-01	Total/NA	Water	8260C	
480-35387-36	Trip Blank	Total/NA	Water	8260C	
LCS 480-111112/4	Lab Control Sample	Total/NA	Water	8260C	
LCSD 480-111112/5	Lab Control Sample Dup	Total/NA	Water	8260C	
MB 480-111112/7	Method Blank	Total/NA	Water	8260C	

Analysis Batch: 111260

Lab Sample ID	Client Sample ID	Prep Type	Matrix	Method	Prep Batch
480-35387-31 - DL	REW-11-2013 0329-01	Total/NA	Water	8260C	
480-35387-32 - DL	REW-12-2013 0328-01	Total/NA	Water	8260C	
480-35387-33	DUPX1-2013 0328-01	Total/NA	Water	8260C	
480-35387-34	DUPX2-2013 0329-01	Total/NA	Water	8260C	
480-35387-35	DUPX3-2013 0401-01	Total/NA	Water	8260C	
LCS 480-111260/4	Lab Control Sample	Total/NA	Water	8260C	
LCSD 480-111260/5	Lab Control Sample Dup	Total/NA	Water	8260C	
MB 480-111260/7	Method Blank	Total/NA	Water	8260C	

Lab Chronicle

Client: Innovative Engineering Solutions, Inc
Project/Site: IDS Wayland

TestAmerica Job ID: 480-35387-1

Client Sample ID: DEP-19M-2013 0401-01 — Lab Sample ID: 480-35387-1

Date Collected: 04/01/13 12:40 — **Matrix: Water**
Date Received: 04/02/13 01:40

Prep Type	Batch Type	Batch Method	Run	Dilution Factor	Batch Number	Prepared or Analyzed	Analyst	Lab
Total/NA	Analysis	8260C		1	110854	04/04/13 12:37	RL	TAL BUF

Client Sample ID: DEP-21-2013 0401-01 — Lab Sample ID: 480-35387-2

Date Collected: 04/01/13 12:00 — **Matrix: Water**
Date Received: 04/02/13 01:40

Prep Type	Batch Type	Batch Method	Run	Dilution Factor	Batch Number	Prepared or Analyzed	Analyst	Lab
Total/NA	Analysis	8260C		1	110854	04/04/13 13:01	RL	TAL BUF

Client Sample ID: MW-261S-2013 0401 — Lab Sample ID: 480-35387-3

Date Collected: 04/01/13 08:35 — **Matrix: Water**
Date Received: 04/02/13 01:40

Prep Type	Batch Type	Batch Method	Run	Dilution Factor	Batch Number	Prepared or Analyzed	Analyst	Lab
Total/NA	Analysis	8260B SIM		4	110641	04/03/13 16:20	TRB	TAL BUF
Total/NA	Analysis	8260C		200	110854	04/04/13 13:25	RL	TAL BUF

Client Sample ID: MW-263M-2013 0401 — Lab Sample ID: 480-35387-4

Date Collected: 04/01/13 10:55 — **Matrix: Water**
Date Received: 04/02/13 01:40

Prep Type	Batch Type	Batch Method	Run	Dilution Factor	Batch Number	Prepared or Analyzed	Analyst	Lab
Total/NA	Analysis	8260C		1	110854	04/04/13 13:48	RL	TAL BUF

Client Sample ID: MW-264M-2013 0401 — Lab Sample ID: 480-35387-5

Date Collected: 04/01/13 10:20 — **Matrix: Water**
Date Received: 04/02/13 01:40

Prep Type	Batch Type	Batch Method	Run	Dilution Factor	Batch Number	Prepared or Analyzed	Analyst	Lab
Total/NA	Analysis	8260C		1	110854	04/04/13 14:12	RL	TAL BUF

Client Sample ID: MW-265S-2013 0401 — Lab Sample ID: 480-35387-6

Date Collected: 04/01/13 10:20 — **Matrix: Water**
Date Received: 04/02/13 01:40

Prep Type	Batch Type	Batch Method	Run	Dilution Factor	Batch Number	Prepared or Analyzed	Analyst	Lab
Total/NA	Analysis	8260C		1	111019	04/05/13 00:33	LH	TAL BUF

Lab Chronicle

Client: Innovative Engineering Solutions, Inc
Project/Site: IDS Wayland

TestAmerica Job ID: 480-35387-1

Client Sample ID: MW-265M-2013 0329-01 — Lab Sample ID: 480-35387-7

Date Collected: 03/29/13 11:30 — **Matrix: Water**
Date Received: 04/02/13 01:40

Prep Type	Batch Type	Batch Method	Run	Dilution Factor	Batch Number	Prepared or Analyzed	Analyst	Lab
Total/NA	Analysis	8260B SIM		4	110641	04/03/13 16:44	TRB	TAL BUF
Total/NA	Analysis	8260C		10	110854	04/04/13 15:00	RL	TAL BUF
Total/NA	Analysis	8260C	DL	25	111019	04/05/13 00:57	LH	TAL BUF

Client Sample ID: MW-265D-2013 0401-01 — Lab Sample ID: 480-35387-8

Date Collected: 04/01/13 11:35 — **Matrix: Water**
Date Received: 04/02/13 01:40

Prep Type	Batch Type	Batch Method	Run	Dilution Factor	Batch Number	Prepared or Analyzed	Analyst	Lab
Total/NA	Analysis	8260C		1	110854	04/04/13 15:23	RL	TAL BUF

Client Sample ID: MW-266Ma-2013 0329-01 — Lab Sample ID: 480-35387-9

Date Collected: 03/29/13 14:05 — **Matrix: Water**
Date Received: 04/02/13 01:40

Prep Type	Batch Type	Batch Method	Run	Dilution Factor	Batch Number	Prepared or Analyzed	Analyst	Lab
Total/NA	Analysis	8260B SIM		1	110641	04/03/13 17:08	TRB	TAL BUF
Total/NA	Analysis	8260C		1	110854	04/04/13 15:47	RL	TAL BUF

Client Sample ID: MW-266Mb-2013 0401-01 — Lab Sample ID: 480-35387-10

Date Collected: 04/01/13 12:25 — **Matrix: Water**
Date Received: 04/02/13 01:40

Prep Type	Batch Type	Batch Method	Run	Dilution Factor	Batch Number	Prepared or Analyzed	Analyst	Lab
Total/NA	Analysis	8260C		1	111019	04/05/13 01:21	LH	TAL BUF

Client Sample ID: MW-267S-2013 0329-01 — Lab Sample ID: 480-35387-11

Date Collected: 03/29/13 14:50 — **Matrix: Water**
Date Received: 04/02/13 01:40

Prep Type	Batch Type	Batch Method	Run	Dilution Factor	Batch Number	Prepared or Analyzed	Analyst	Lab
Total/NA	Analysis	8260B SIM		1	110641	04/03/13 17:32	TRB	TAL BUF
Total/NA	Analysis	8260C		5	111019	04/05/13 01:45	LH	TAL BUF

Client Sample ID: MW-267M-2013 0329-01 — Lab Sample ID: 480-35387-12

Date Collected: 03/29/13 14:15 — **Matrix: Water**
Date Received: 04/02/13 01:40

Prep Type	Batch Type	Batch Method	Run	Dilution Factor	Batch Number	Prepared or Analyzed	Analyst	Lab
Total/NA	Analysis	8260C		5	110854	04/04/13 16:58	RL	TAL BUF
Total/NA	Analysis	8260C	DL	10	111019	04/05/13 02:08	LH	TAL BUF

Lab Chronicle

Client: Innovative Engineering Solutions, Inc
Project/Site: IDS Wayland

TestAmerica Job ID: 480-35387-1

Client Sample ID: MW-268M-2013 0329-01 — Lab Sample ID: 480-35387-13

Date Collected: 03/29/13 08:35 — **Matrix: Water**
Date Received: 04/02/13 01:40

Prep Type	Batch Type	Batch Method	Run	Dilution Factor	Batch Number	Prepared or Analyzed	Analyst	Lab
Total/NA	Analysis	8260B SIM		1	110641	04/03/13 17:56	TRB	TAL BUF
Total/NA	Analysis	8260C		25	111019	04/05/13 02:32	LH	TAL BUF

Client Sample ID: MW-268D-2013 0401 — Lab Sample ID: 480-35387-14

Date Collected: 04/01/13 09:25 — **Matrix: Water**
Date Received: 04/02/13 01:40

Prep Type	Batch Type	Batch Method	Run	Dilution Factor	Batch Number	Prepared or Analyzed	Analyst	Lab
Total/NA	Analysis	8260C		1	110854	04/04/13 17:46	RL	TAL BUF

Client Sample ID: MW-269Ma-2013 0329-01 — Lab Sample ID: 480-35387-15

Date Collected: 03/29/13 12:03 — **Matrix: Water**
Date Received: 04/02/13 01:40

Prep Type	Batch Type	Batch Method	Run	Dilution Factor	Batch Number	Prepared or Analyzed	Analyst	Lab
Total/NA	Analysis	8260B SIM		1	110641	04/03/13 18:20	TRB	TAL BUF
Total/NA	Analysis	8260C		1	110854	04/04/13 18:10	RL	TAL BUF

Client Sample ID: MW-551-2013 0329-01 — Lab Sample ID: 480-35387-16

Date Collected: 03/29/13 13:25 — **Matrix: Water**
Date Received: 04/02/13 01:40

Prep Type	Batch Type	Batch Method	Run	Dilution Factor	Batch Number	Prepared or Analyzed	Analyst	Lab
Total/NA	Analysis	8260C		100	110854	04/04/13 18:34	RL	TAL BUF
Total/NA	Analysis	8260C	DL	400	111019	04/05/13 02:56	LH	TAL BUF

Client Sample ID: MW-552-2013 0329-01 — Lab Sample ID: 480-35387-17

Date Collected: 03/29/13 09:35 — **Matrix: Water**
Date Received: 04/02/13 01:40

Prep Type	Batch Type	Batch Method	Run	Dilution Factor	Batch Number	Prepared or Analyzed	Analyst	Lab
Total/NA	Analysis	8260B SIM		2	110641	04/03/13 18:44	TRB	TAL BUF
Total/NA	Analysis	8260C		8	111019	04/05/13 03:20	LH	TAL BUF

Client Sample ID: MW-553-2013 0329-01 — Lab Sample ID: 480-35387-18

Date Collected: 03/29/13 10:40 — **Matrix: Water**
Date Received: 04/02/13 01:40

Prep Type	Batch Type	Batch Method	Run	Dilution Factor	Batch Number	Prepared or Analyzed	Analyst	Lab
Total/NA	Analysis	8260C		200	110854	04/04/13 19:21	RL	TAL BUF
Total/NA	Analysis	8260C	DL	400	111019	04/05/13 03:43	LH	TAL BUF

Lab Chronicle

Client: Innovative Engineering Solutions, Inc
Project/Site: IDS Wayland

TestAmerica Job ID: 480-35387-1

Client Sample ID: MW-560-2013 0329-01 — Lab Sample ID: 480-35387-19

Date Collected: 03/29/13 10:35 — **Matrix: Water**
Date Received: 04/02/13 01:40

Prep Type	Batch Type	Batch Method	Run	Dilution Factor	Batch Number	Prepared or Analyzed	Analyst	Lab
Total/NA	Analysis	8260C		1	110854	04/04/13 19:45	RL	TAL BUF

Client Sample ID: MW-561-2013 0329-01 — Lab Sample ID: 480-35387-20

Date Collected: 03/29/13 10:15 — **Matrix: Water**
Date Received: 04/02/13 01:40

Prep Type	Batch Type	Batch Method	Run	Dilution Factor	Batch Number	Prepared or Analyzed	Analyst	Lab
Total/NA	Analysis	8260C		5	111112	04/05/13 13:03	RL	TAL BUF

Client Sample ID: MW-562-2013 0329-01 — Lab Sample ID: 480-35387-21

Date Collected: 03/29/13 12:30 — **Matrix: Water**
Date Received: 04/02/13 01:40

Prep Type	Batch Type	Batch Method	Run	Dilution Factor	Batch Number	Prepared or Analyzed	Analyst	Lab
Total/NA	Analysis	8260C		4	111112	04/05/13 13:27	RL	TAL BUF

Client Sample ID: MW-563-2013 0329-01 — Lab Sample ID: 480-35387-22

Date Collected: 03/29/13 09:35 — **Matrix: Water**
Date Received: 04/02/13 01:40

Prep Type	Batch Type	Batch Method	Run	Dilution Factor	Batch Number	Prepared or Analyzed	Analyst	Lab
Total/NA	Analysis	8260C		10	111019	04/05/13 04:55	LH	TAL BUF

Client Sample ID: REW-1-2013 0328-01 — Lab Sample ID: 480-35387-23

Date Collected: 03/28/13 12:25 — **Matrix: Water**
Date Received: 04/02/13 01:40

Prep Type	Batch Type	Batch Method	Run	Dilution Factor	Batch Number	Prepared or Analyzed	Analyst	Lab
Total/NA	Analysis	8260C		50	111019	04/05/13 05:18	LH	TAL BUF

Client Sample ID: REW-4-2013 0328-01 — Lab Sample ID: 480-35387-24

Date Collected: 03/28/13 13:25 — **Matrix: Water**
Date Received: 04/02/13 01:40

Prep Type	Batch Type	Batch Method	Run	Dilution Factor	Batch Number	Prepared or Analyzed	Analyst	Lab
Total/NA	Analysis	8260C		5	111019	04/05/13 05:42	LH	TAL BUF
Total/NA	Analysis	8260C	DL	10	111112	04/05/13 13:51	RL	TAL BUF

Lab Chronicle

Client: Innovative Engineering Solutions, Inc
Project/Site: IDS Wayland

TestAmerica Job ID: 480-35387-1

Client Sample ID: REW-5-2013 0328-01 — Lab Sample ID: 480-35387-25

Date Collected: 03/28/13 14:00 — **Matrix: Water**
Date Received: 04/02/13 01:40

Prep Type	Batch Type	Batch Method	Run	Dilution Factor	Batch Number	Prepared or Analyzed	Analyst	Lab
Total/NA	Analysis	8260C		10	111019	04/05/13 06:06	LH	TAL BUF

Client Sample ID: REW-6-2013 0329-01 — Lab Sample ID: 480-35387-26

Date Collected: 03/29/13 07:35 — **Matrix: Water**
Date Received: 04/02/13 01:40

Prep Type	Batch Type	Batch Method	Run	Dilution Factor	Batch Number	Prepared or Analyzed	Analyst	Lab
Total/NA	Analysis	8260C		10	111019	04/05/13 06:30	LH	TAL BUF

Client Sample ID: REW-7-2013 0401-01 — Lab Sample ID: 480-35387-27

Date Collected: 04/01/13 09:55 — **Matrix: Water**
Date Received: 04/02/13 01:40

Prep Type	Batch Type	Batch Method	Run	Dilution Factor	Batch Number	Prepared or Analyzed	Analyst	Lab
Total/NA	Analysis	8260C		10	111019	04/05/13 06:53	LH	TAL BUF

Client Sample ID: REW-8-2013 0328-01 — Lab Sample ID: 480-35387-28

Date Collected: 03/28/13 08:55 — **Matrix: Water**
Date Received: 04/02/13 01:40

Prep Type	Batch Type	Batch Method	Run	Dilution Factor	Batch Number	Prepared or Analyzed	Analyst	Lab
Total/NA	Analysis	8260C		10	111019	04/05/13 07:17	LH	TAL BUF

Client Sample ID: REW-9-2013 0328-01 — Lab Sample ID: 480-35387-29

Date Collected: 03/28/13 10:30 — **Matrix: Water**
Date Received: 04/02/13 01:40

Prep Type	Batch Type	Batch Method	Run	Dilution Factor	Batch Number	Prepared or Analyzed	Analyst	Lab
Total/NA	Analysis	8260C		1	111112	04/05/13 14:15	RL	TAL BUF

Client Sample ID: REW-10-2013 0328-01 — Lab Sample ID: 480-35387-30

Date Collected: 03/28/13 09:45 — **Matrix: Water**
Date Received: 04/02/13 01:40

Prep Type	Batch Type	Batch Method	Run	Dilution Factor	Batch Number	Prepared or Analyzed	Analyst	Lab
Total/NA	Analysis	8260C		1	111112	04/05/13 14:39	RL	TAL BUF

Lab Chronicle

Client: Innovative Engineering Solutions, Inc
Project/Site: IDS Wayland

TestAmerica Job ID: 480-35387-1

Client Sample ID: REW-11-2013 0329-01 — Lab Sample ID: 480-35387-31

Date Collected: 03/29/13 08:05 — **Matrix: Water**
Date Received: 04/02/13 01:40

Prep Type	Batch Type	Batch Method	Run	Dilution Factor	Batch Number	Prepared or Analyzed	Analyst	Lab
Total/NA	Analysis	8260C		1	111112	04/05/13 15:03	RL	TAL BUF
Total/NA	Analysis	8260C	DL	25	111260	04/06/13 00:14	RL	TAL BUF

Client Sample ID: REW-12-2013 0328-01 — Lab Sample ID: 480-35387-32

Date Collected: 03/28/13 11:50 — **Matrix: Water**
Date Received: 04/02/13 01:40

Prep Type	Batch Type	Batch Method	Run	Dilution Factor	Batch Number	Prepared or Analyzed	Analyst	Lab
Total/NA	Analysis	8260C		1	111112	04/05/13 15:26	RL	TAL BUF
Total/NA	Analysis	8260C	DL	4	111260	04/06/13 00:38	RL	TAL BUF

Client Sample ID: DUPX1-2013 0328-01 — Lab Sample ID: 480-35387-33

Date Collected: 03/28/13 00:00 — **Matrix: Water**
Date Received: 04/02/13 01:40

Prep Type	Batch Type	Batch Method	Run	Dilution Factor	Batch Number	Prepared or Analyzed	Analyst	Lab
Total/NA	Analysis	8260C		5	111260	04/06/13 01:02	RL	TAL BUF

Client Sample ID: DUPX2-2013 0329-01 — Lab Sample ID: 480-35387-34

Date Collected: 03/29/13 00:00 — **Matrix: Water**
Date Received: 04/02/13 01:40

Prep Type	Batch Type	Batch Method	Run	Dilution Factor	Batch Number	Prepared or Analyzed	Analyst	Lab
Total/NA	Analysis	8260B SIM		1	110641	04/03/13 19:09	TRB	TAL BUF
Total/NA	Analysis	8260C		1	111260	04/06/13 01:26	RL	TAL BUF

Client Sample ID: DUPX3-2013 0401-01 — Lab Sample ID: 480-35387-35

Date Collected: 04/01/13 00:00 — **Matrix: Water**
Date Received: 04/02/13 01:40

Prep Type	Batch Type	Batch Method	Run	Dilution Factor	Batch Number	Prepared or Analyzed	Analyst	Lab
Total/NA	Analysis	8260C		1	111260	04/06/13 01:50	RL	TAL BUF

Client Sample ID: Trip Blank — Lab Sample ID: 480-35387-36

Date Collected: 04/01/13 00:00 — **Matrix: Water**
Date Received: 04/02/13 01:40

Prep Type	Batch Type	Batch Method	Run	Dilution Factor	Batch Number	Prepared or Analyzed	Analyst	Lab
Total/NA	Analysis	8260B SIM		1	110641	04/03/13 12:42	TRB	TAL BUF
Total/NA	Analysis	8260C		1	111112	04/05/13 17:01	RL	TAL BUF

Lab Chronicle

Client: Innovative Engineering Solutions, Inc
Project/Site: IDS Wayland

TestAmerica Job ID: 480-35387-1

Laboratory References:

TAL BUF = TestAmerica Buffalo, 10 Hazelwood Drive, Amherst, NY 14228-2298, TEL (716)691-2600

Certification Summary

Client: Innovative Engineering Solutions, Inc
Project/Site: IDS Wayland

TestAmerica Job ID: 480-35387-1

Laboratory: TestAmerica Buffalo

All certifications held by this laboratory are listed. Not all certifications are applicable to this report.

Authority	Program	EPA Region	Certification ID	Expiration Date
Arkansas DEQ	State Program	6	88-0686	07-06-13
California	NELAP	9	1169CA	09-30-13
Connecticut	State Program	1	PH-0568	09-30-14
Florida	NELAP	4	E87672	06-30-13
Georgia	State Program	4	N/A	03-31-13 *
Georgia	State Program	4	956	06-30-13
Georgia	State Program	4	956	06-30-13
Illinois	NELAP	5	200003	09-30-13
Iowa	State Program	7	374	03-01-13 *
Kansas	NELAP	7	E-10187	01-31-14
Kentucky	State Program	4	90029	12-31-13
Kentucky (UST)	State Program	4	30	04-01-13 *
Louisiana	NELAP	6	02031	06-30-13
Maine	State Program	1	NY00044	12-04-13
Maryland	State Program	3	294	03-31-13 *
Massachusetts	State Program	1	M-NY044	06-30-13
Michigan	State Program	5	9937	04-01-13 *
Minnesota	NELAP	5	036-999-337	12-31-13
New Hampshire	NELAP	1	2973	09-11-13
New Hampshire	NELAP	1	2337	11-17-13
New Jersey	NELAP	2	NY455	06-30-13
New York	NELAP	2	10026	04-01-14
North Dakota	State Program	8	R-176	03-31-13 *
Oklahoma	State Program	6	9421	08-31-13
Oregon	NELAP	10	NY200003	06-09-13
Pennsylvania	NELAP	3	68-00281	07-31-13
Rhode Island	State Program	1	LAO00328	12-31-13
Tennessee	State Program	4	TN02970	04-01-13 *
Texas	NELAP	6	T104704412-11-2	07-31-13
USDA	Federal		P330-11-00386	11-22-14
Virginia	NELAP	3	460185	09-14-13
Washington	State Program	10	C784	02-10-14
West Virginia DEP	State Program	3	252	09-30-13
Wisconsin	State Program	5	998310390	08-31-13

* Expired certification is currently pending renewal and is considered valid.

Method Summary

Client: Innovative Engineering Solutions, Inc
Project/Site: IDS Wayland

TestAmerica Job ID: 480-35387-1

Method	Method Description	Protocol	Laboratory
8260B SIM	Volatile Organic Compounds (GC/MS)	SW846	TAL BUF
8260C	Volatile Organic Compounds (GC/MS)	MA DEP	TAL BUF

Protocol References:

MA DEP = Massachusetts Department Of Environmental Protection

SW846 = "Test Methods For Evaluating Solid Waste, Physical/Chemical Methods", Third Edition, November 1986 And Its Updates.

Laboratory References:

TAL BUF = TestAmerica Buffalo, 10 Hazelwood Drive, Amherst, NY 14228-2298, TEL (716)691-2600

Sample Summary

Client: Innovative Engineering Solutions, Inc
Project/Site: IDS Wayland

TestAmerica Job ID: 480-35387-1

Lab Sample ID	Client Sample ID	Matrix	Collected	Received
480-35387-1	DEP-19M-2013 0401-01	Water	04/01/13 12:40	04/02/13 01:40
480-35387-2	DEP-21-2013 0401-01	Water	04/01/13 12:00	04/02/13 01:40
480-35387-3	MW-261S-2013 0401	Water	04/01/13 08:35	04/02/13 01:40
480-35387-4	MW-263M-2013 0401	Water	04/01/13 10:55	04/02/13 01:40
480-35387-5	MW-264M-2013 0401	Water	04/01/13 10:20	04/02/13 01:40
480-35387-6	MW-265S-2013 0401	Water	04/01/13 10:20	04/02/13 01:40
480-35387-7	MW-265M-2013 0329-01	Water	03/29/13 11:30	04/02/13 01:40
480-35387-8	MW-265D-2013 0401-01	Water	04/01/13 11:35	04/02/13 01:40
480-35387-9	MW-266Ma-2013 0329-01	Water	03/29/13 14:05	04/02/13 01:40
480-35387-10	MW-266Mb-2013 0401-01	Water	04/01/13 12:25	04/02/13 01:40
480-35387-11	MW-267S-2013 0329-01	Water	03/29/13 14:50	04/02/13 01:40
480-35387-12	MW-267M-2013 0329-01	Water	03/29/13 14:15	04/02/13 01:40
480-35387-13	MW-268M-2013 0329-01	Water	03/29/13 08:35	04/02/13 01:40
480-35387-14	MW-268D-2013 0401	Water	04/01/13 09:25	04/02/13 01:40
480-35387-15	MW-269Ma-2013 0329-01	Water	03/29/13 12:03	04/02/13 01:40
480-35387-16	MW-551-2013 0329-01	Water	03/29/13 13:25	04/02/13 01:40
480-35387-17	MW-552-2013 0329-01	Water	03/29/13 09:35	04/02/13 01:40
480-35387-18	MW-553-2013 0329-01	Water	03/29/13 10:40	04/02/13 01:40
480-35387-19	MW-560-2013 0329-01	Water	03/29/13 10:35	04/02/13 01:40
480-35387-20	MW-561-2013 0329-01	Water	03/29/13 10:15	04/02/13 01:40
480-35387-21	MW-562-2013 0329-01	Water	03/29/13 12:30	04/02/13 01:40
480-35387-22	MW-563-2013 0329-01	Water	03/29/13 09:35	04/02/13 01:40
480-35387-23	REW-1-2013 0328-01	Water	03/28/13 12:25	04/02/13 01:40
480-35387-24	REW-4-2013 0328-01	Water	03/28/13 13:25	04/02/13 01:40
480-35387-25	REW-5-2013 0328-01	Water	03/28/13 14:00	04/02/13 01:40
480-35387-26	REW-6-2013 0329-01	Water	03/29/13 07:35	04/02/13 01:40
480-35387-27	REW-7-2013 0401-01	Water	04/01/13 09:55	04/02/13 01:40
480-35387-28	REW-8-2013 0328-01	Water	03/28/13 08:55	04/02/13 01:40
480-35387-29	REW-9-2013 0328-01	Water	03/28/13 10:30	04/02/13 01:40
480-35387-30	REW-10-2013 0328-01	Water	03/28/13 09:45	04/02/13 01:40
480-35387-31	REW-11-2013 0329-01	Water	03/29/13 08:05	04/02/13 01:40
480-35387-32	REW-12-2013 0328-01	Water	03/28/13 11:50	04/02/13 01:40
480-35387-33	DUPX1-2013 0328-01	Water	03/28/13 00:00	04/02/13 01:40
480-35387-34	DUPX2-2013 0329-01	Water	03/29/13 00:00	04/02/13 01:40
480-35387-35	DUPX3-2013 0401-01	Water	04/01/13 00:00	04/02/13 01:40
480-35387-36	Trip Blank	Water	04/01/13 00:00	04/02/13 01:40

TestAmerica Westfield
Westfield Executive Park 53 Southampton Road
Westfield, MA 01085
Phone (413) 572-4000 Fax (413) 572-3707

Boston Service Center
240 Bear Hill Rd Suite 104
Waltham, MA 02451
Phone (781) 466-6900 Fax (781) 466-6901

Chain of Custody Record

TestAmerica
THE LEADER IN ENVIRONMENTAL TESTING

Client Information				
Client Contact: Vicki Perkins	Sampler: Doug Jones, Cathy Hirsch	Lab PM:	Carrier Tracking No(s):	COC No: 22866
	Phone: same	E-Mail: same		Page: 1 of 4
Company: Innovative Engineering Solutions Inc				Job #
Address: 95 Spring St	Due Date Requested: 4/16/13			
City: Wilpole	TAT Requested (days):			
State, Zip: MA 02081				
Phone: 508-668-0033	Quote #			
Email: v.perkins@IESolutions.com	PO # RA-008			
Project Name/number: RA-008	WO #			
Site: Wilpole, MA	SSOW#			

Analysis Requested

Preservation Codes:
A - HCL; B - NaOH; C - Zn Acetate; D - Nitric Acid; E - NaHSO4; F - MeOH; H - Ascorbic Acid; I - Ice; J - DI Water; M - Hexane; N - None; P - Na2O4S; Q - Na2SO3; R - Na2S2SO3; S - H2SO4; Z - other (specify)

Regulatory programs:
MCP [X] GW1/S1 [X]
RCP [ ] CT RSR [ ]
DEP Form [X] EDD Required [X]

Sample Identification	Sample Date	Sample Time	Sample Type (C=comp, G=grab)	Matrix (W=water, S=solid, O=waste/oil, BT=Tissue, A=Air)	Sampler's Initials	Field Filtered Sample?	Perform MS/MSD?	8260B	8260 - SIMS									Total Number of containers	Special Instructions/Note:
			Preservation Code:					A	A										
DEP-1(MW-2013 0401-01)	4/1/13	1240	G	W	DJ			X										3	
DEP-21-2013 0401-01	4/1/13	1200	G	W	DJ			X										3	
MW-261S-20130401	4/1/13	0835	G	W	DJ			X	X									6	
MW-263M-20130401	4/1/13	1055	G	W	DJ			X										3	
MW-264M-20130401	4/1/13	1030	G	W	SH			X										3	
MW-263S-20130401	4/1/13	1020	G	W	SH			X										3	
MW-265M-20130329-01	3/29/13	1130	G	W	SH			X	X									6	
MW-265D-20130401-01	4/1/13	1135	G	W				X										3	
MW-266MA-20130329-01	3/29/13	1403	G	W	DJ			X	X									6	
MW-266MB-20130401-01	4/1/13	1225	G	W				X										3	

Possible Hazard Identification
[X] Non-Hazard [ ] Flammable [ ] Skin Irritant [ ] Poison B [ ] Unknown [ ] Radiological

Sample Disposal (A fee may be assessed if samples are retained longer than 1 month)
[ ] Return To Client [X] Disposal By Lab [ ] Archive For ____ Months

Deliverable Requested: I, II, III, IV, Other (specify)

Special Instructions/QC Requirements

Relinquished by	Date/Time	Company	Received by	Date/Time	Company
[signature]	4/1/13 1325	IES	[signature]	4/1/13 1325	IES
[signature]	4/1/13 1403	IES	[signature]	4/1/13 1403	TA
[signature]	4/1/13 1635		[signature]	4/2/13 ~~4/1/13~~ 0140	TA

Custody Seals Intact: [ ] Yes [ ] No
Custody Seal No.:
Cooler Temperature(s) °C and Other Remarks: 3.0 ICE #1 CW

TAL-8245-360 1111

TestAmerica Westfield
Westfield Executive Park 53 Southampton Road
Westfield, MA 01085
Phone (413) 572-4000 Fax (413) 572-3707

Boston Service Center
240 Bear Hill Rd. Suite 104
Waltham, MA 02451
Phone (781) 466-6900 Fax (781) 466-6901

Chain of Custody Record

TestAmerica
THE LEADER IN ENVIRONMENTAL TESTING

Client Information	Sampler: Dany Jones, Seth Hirsch	Lab PM	Carrier Tracking No(s)	COC No: 22861
Client Contact: Vidi Preiyan	Phone: same	E-Mail: same		Page: 2 of 4
Company: Innovative Engineering Solutions Inc				Job #
Address: 25 Spring St	Due Date Requested: 4/16/13			
City: Walpole	TAT Requested (days):			
State, Zip: MA 02081				
Phone: 508-668-0033	Quote #			
Email: v.preiyan@IESIonline.com	PO # RA-008			
Project Name/number: RA-008	WO #			
Site: Weymouth MA	SSOW#			

Analysis Requested

Preservation Codes:
A - HCL, B - NaOH, C - Zn Acetate, D - Nitric Acid, E - NaHSO4, F - MeOH, H - Ascorbic Acid, I - Ice, J - DI Water, M - Hexane, N - None, P - Na2O4S, Q - Na2SO3, R - Na2S2SO3, S - H2SO4, Z - other (specify)

Regulatory programs:
MCP [X] GW1/S1 [X]
RCP [ ] CT RSR [ ]
DEP Form [X] EDD Required [X]

Sample Identification	Sample Date	Sample Time	Sample Type (C=Comp, G=grab)	Matrix (W=water, S=solid, O=waste/oil, BT=Tissue, A=Air)	Sampler's Initials	Field Filtered Sample?	Perform MS/MSD?	8260B (Preservation Code: A)	8260B SIMS (Preservation Code: A)	Total Number of containers	Special Instructions/Note:
MW-267S-20130329-01	3/29/13	1450	G	W	SH			X	X	6	
MW-267M-20130329-01	3/29/13	1415	G	W	SH			X		3	
MW-263M-20130329-01	3/29/13	0835	G	W	DJ			X	X	6	
MW-263D-20130401	4/1/13	0925	G	W	DJ			X		3	
MW-269Mc-20130329-01	3/29/13	1205	G	W	DJ			X	X	6	
MW-531-20130329-01	3/29/13	1325	G	W	SH			X		3	
MW-532-20130329-01	3/29/13	0935	G	W	SH			X	X	6	
MW-533-20130329-01	3/29/13	1040	G	W	SH			X		3	
MW-560-20130329-01	3/29/13	1055	G	W	DJ			X		3	
MW-561-20130329-01	3/29/13	1015	G	W	DJ			X		3	

Possible Hazard Identification
[X] Non-Hazard [ ] Flammable [ ] Skin Irritant [ ] Poison B [ ] Unknown [ ] Radiological

Sample Disposal (A fee may be assessed if samples are retained longer than 1 month)
[ ] Return To Client [X] Disposal By Lab [ ] Archive For ____ Months

Deliverable Requested: I, II, III, IV, Other (specify)

Special Instructions/QC Requirements:

Relinquished by	Date/Time	Company	Received by	Date/Time	Company
[signature]	4/1/13 1325	IESI	[signature]	4/1/13 1325	IESI
[signature]	4/1/13 1403	IESI	[signature]	4/1/13 1403	TAL
[signature]	4/1/13 163		[signature]	4/2/13 0140	TA

Custody Seals Intact: Δ Yes Δ No
Custody Seal No.:
Cooler Temperature(s) °C and Other Remarks: 3.0 ICE#

TAL-8245-360 1111

TestAmerica Westfield
Westfield Executive Park 53 Southampton Road
Westfield, MA 01085
Phone (413) 572-4000 Fax (413) 572-3707

Boston Service Center
240 Bear Hill Rd Suite 104
Waltham, MA 02451
Phone (781) 466-6900 Fax (781) 466-6901

Chain of Custody Record

TestAmerica
THE LEADER IN ENVIRONMENTAL TESTING

Client Information	Sampler	Lab PM	Carrier Tracking No(s)	COC No
	Doug Jones Gareth Hirsch			22862
Client Contact: Vicki Pieringe	Phone: same	E-Mail: same		Page: 3 of 4
Company: Innovative Engineering Solutions Inc				Job #:
Address: 95 Spring St	Due Date Requested: 4/16/13			
City: Walpole	TAT Requested (days):			
State Zip: MA 02081				
Phone: 508-668-0033	Quote #			
Email: vipieringe@iesolinc.com	PO # RA-008			
Project Name/number: RA-008	WO #			
Site: Wayland MA	SSOW#			

Analysis Requested

Preservation Codes:
A - HCL, B - NaOH, C - Zn Acetate, D - Nitric Acid, E - NaHSO4, F - MeOH, H - Ascorbic Acid, I - Ice, J - DI Water, M - Hexane, N - None, P - Na2O4S, Q - Na2SO3, R - Na2S2SO3, S - H2SO4, Z - other (specify)

Regulatory programs:
MCP [X] GW1/S1 [X]
RCP [ ] CT RSR [ ]
DEP Form [X] EDD Required [X]

Sample Identification	Sample Date	Sample Time	Sample Type (C=comp, G=grab)	Matrix (W=water, S=solid, O=waste/oil, BT=Tissue A=Air)	Sampler's Initials	Field Filtered Sample?	Perform MS/MSD?	8260B		Total Number of containers	Special Instructions/Note:
			Preservation Code.					HA	HA		
MW-562-20130329-01	3/28/13	1230	G	W	GH			X		3	
MW-563-20130329-01	3/28/13	0135	G	W				X		3	
REW-1-2013 0328-01	3/28/13	1325	G	W				X		3	
REW-4-2013 0328-01	3/28/13	1325	G	W				X		3	
REW-5-2013 0328-01	3/28/13	1400	G	W				X		3	
REW-6-20130328-01	3/28/13	0735	G	W				X		3	
REW-7-2013 0328-01	3/28/13	0855	G	W				X		3	
REW-8-2013 0328-01	3/28/13	0955	G	W				X		3	
REW-9-2013 0328-01	3/28/13	1030	G	W				X		3	
REW-10-2013 0328-01	3/28/13	0945	G	W				X		3	

Possible Hazard Identification
[X] Non-Hazard [ ] Flammable [ ] Skin Irritant [ ] Poison B [ ] Unknown [ ] Radiological

Sample Disposal (~~A fee may be assessed if samples are retained longer than 1 month~~)
[ ] Return To Client [X] Disposal By Lab [ ] Archive For ____ Months

Deliverable Requested: I, II, III, IV, Other (specify)

Special Instructions/QC Requirements:

Relinquished by	Date/Time	Company	Received by	Date/Time	Company
	4/1/13 1325	IESI		4/1/13 1325	IESI
	4/1/13 1403	IESI		4/1/13 1403	TAL
	4/1/13 163			4/2/13 ~~4/1/13~~ 0140	TA

Custody Seals Intact: Δ Yes Δ No
Custody Seal No.:
Cooler Temperature(s) °C and Other Remarks: 3.0 ICE#1

TAL-8245-360 1111

TestAmerica Westfield
Westfield Executive Park 53 Southampton Road
Westfield, MA 01085
Phone (413) 572-4000 Fax (413) 572-3707

Boston Service Center
240 Bear Hill Rd. Suite 104
Waltham, MA 02451
Phone (781) 466-6900 Fax (781) 466-6901

Chain of Custody Record

TestAmerica
THE LEADER IN ENVIRONMENTAL TESTING

Client Information				
Client Contact: Vidia Pwiyan	Sampler: Dwey Jones	Lab PM:	Carrier Tracking No(s):	COC No: 22863
Company: Innovative Engineering Solutions Inc	Phone: 5mt	E-Mail: 5mt		Page: 4 of 4
Address: 25 Spring St	Due Date Requested: 4/16/13			Job #:
City: Walpole	TAT Requested (days):			
State, Zip: MA 02081				
Phone: 508-668-0033	Quote #:			
Email: vipwiyan@IESolutions.com	PO #: RA-003			
Project Name/number: RA-008	WO #:			
Site: Wayland MA	SSOW#:			

Analysis Requested

Preservation Codes:
A - HCL; B - NaOH; C - Zn Acetate; D - Nitric Acid; E - NaHSO4; F - MeOH; H - Ascorbic Acid; I - Ice; J - DI Water; M - Hexane; N - None; P - Na2O4S; Q - Na2SO3; R - Na2S2SO3; S - H2SO4; Z - other (specify)

Regulatory programs:
MCP [X] GW1/S1 [X]
RCP [ ] CT RSR [ ]
DEP Form [X] EDD Required [X]

Sample Identification	Sample Date	Sample Time	Sample Type (C=comp, G=grab)	Matrix (W=water, S=solid, O=waste/oil, BT=Tissue, A=Air)	Sampler's Initials	Field Filtered Sample?	Perform MS/MSD?	8260B	8260B - SIMS	Total Number of containers	Special Instructions/Note:
			Preservation Code:		X	X	X	X			
RZW-11-20130329-01	3/29/13	0805	G	W				X		3	
RZW-12-20130328-01	3/28/13	1150	G	W				X		3	
Dup#1 - 20130328-01	—	—	G	W				X			
Dup#2 - 20130328-01	—	—	G	W				X	X	6	
Dup#3 - 20130401-01	—	—	G	W				X		3	
TRIP BLANK	—	—	G	W				X	X		LITB for 8260 B) LITB for 8260-SIMS)

Possible Hazard Identification
[X] Non-Hazard [ ] Flammable [ ] Skin Irritant [ ] Poison B [ ] Unknown [ ] Radiological

Sample Disposal (A fee may be assessed if samples are retained longer than 1 month)
[ ] Return To Client [X] Disposal By Lab [ ] Archive For ____ Months

Deliverable Requested: I, II, III, IV, Other (specify)

Special Instructions/QC Requirements:

Relinquished by	Date/Time	Company	Received by	Date/Time	Company
[signature]	4/1/13	IES	[signature]	4/1/13	EBSI
[signature]	4/1/13 1403	EBSI	[signature]	4/1/13	TAL
[signature]	4/1/13 1630		[signature]	4/2/13 0140	TA

Custody Seals Intact: [ ] Yes [ ] No
Custody Seal No.:
Cooler Temperature(s) °C and Other Remarks: 3.0 ICE #1

TAL-8245-360 1111

Login Sample Receipt Checklist

Client: Innovative Engineering Solutions, Inc

Job Number: 480-35387-1

Login Number: 35387
List Number: 1
Creator: Janish, Carl

List Source: TestAmerica Buffalo

Question	Answer	Comment
Radioactivity either was not measured or, if measured, is at or below background	True	
The cooler's custody seal, if present, is intact.	True	
The cooler or samples do not appear to have been compromised or tampered with.	True	
Samples were received on ice.	True	
Cooler Temperature is acceptable.	True	
Cooler Temperature is recorded.	True	
COC is present.	True	
COC is filled out in ink and legible.	True	
COC is filled out with all pertinent information.	True	
Is the Field Sampler's name present on COC?	True	
There are no discrepancies between the sample IDs on the containers and the COC.	True	
Samples are received within Holding Time.	True	
Sample containers have legible labels.	True	
Containers are not broken or leaking.	True	
Sample collection date/times are provided.	True	
Appropriate sample containers are used.	True	
Sample bottles are completely filled.	True	
Sample Preservation Verified	True	
There is sufficient vol. for all requested analyses, incl. any requested MS/MSDs	True	
VOA sample vials do not have headspace or bubble is <6mm (1/4") in diameter.	True	
If necessary, staff have been informed of any short hold time or quick TAT needs	True	
Multiphasic samples are not present.	True	
Samples do not require splitting or compositing.	True	
Sampling Company provided.	True	iesi
Samples received within 48 hours of sampling.	True	
Samples requiring field filtration have been filtered in the field.	N/A	
Chlorine Residual checked.	N/A	

Raytheon, Wayland, MA
Analytical Report

Well Samples

Prepared By:
BTC
25 Spring Street,
Walpole, MA 02081-4301
Phone (508) 668-0191 • Fax (508) 668-5175

Sampled: 12/09/12
Analyzed: 12/10/11-12//12

Bioremediation & Treatability Center

25 Spring Street • Walpole, MA 02081-4301 •phone (508) 668-0191 • fax (508) 668-5175

December 12, 2012

IESI
Sami Fam
Innovative Engineering Solutions, Inc.
25 Spring St.
Walpole, MA 02081-4301

RE: Analytical Data Report
Raytheon
Wayland, MA

Dear Mr. Fam,

Enclosed are the results of the sample(s) submitted to our laboratory on December 10, 2012.

All analyses were performed to our laboratory's quality assurance program. Results apply only to the items submitted to the laboratory for analysis and individual items (samples) analyzed, as listed in the report.

Please call if you have any questions. You may also contact me via email at G.Pon@Biotreatcenter.com

Respectfully submitted,
Bioremediation Treatability Center

George Pon
Laboratory Director

---Dissolved Gasses---

Project Identification:	Raytheon, Wayland, MA
Sample ID	MW-563
Sampler	dj
Sample Date	12/9/12
Sample Time	3:20 PM
Sample Received	12/10/12
Method	Modified EPA 5021 A

Compound	**Test Value**	**Units**	**Detection Limit**	**Analysis Date**	**Tech**
Dissolved Gasses					
Methane	81.2	µg/L	0.3 µg/L	12/10/2012	swd
Ethylene	12.4	µg/L	0.3 µg/L	12/10/2012	swd
Ethane	<0.3	µg/L	0.3 µg/L	12/10/2012	swd
Acetylene	<2	µg/L	2µg/L	12/10/2012	swd

Project Identification:	Raytheon, Wayland, MA
Sample ID	REW-6
Sampler	dj
Sample Date	12/9/12
Sample Time	12:00 PM
Sample Received	12/10/12
Method	Modified EPA 5021 A

Compound	**Test Value**	**Units**	**Detection Limit**	**Analysis Date**	**Tech**
Dissolved Gasses					
Methane	149	µg/L	0.3 µg/L	12/10/2012	swd
Ethylene	0.7	µg/L	0.3 µg/L	12/10/2012	swd
Ethane	<0.3	µg/L	0.3 µg/L	12/10/2012	swd
Acetylene	<2	µg/L	2µg/L	12/10/2012	swd

---Dissolved Gasses---

Project Identification:	Raytheon, Wayland, MA

Sample ID	REW-7
Sampler	dj
Sample Date	12/9/12
Sample Time	1:15 PM
Sample Received	12/10/12

Method Modified EPA 5021 A

Compound	Test Value	Units	Detection Limit	Analysis Date	Tech
Dissolved Gasses					
Methane	299	µg/L	0.3 µg/L	12/10/2012	swd
Ethylene	16.1	µg/L	0.3 µg/L	12/10/2012	swd
Ethane	<0.3	µg/L	0.3 µg/L	12/10/2012	swd
Acetylene	<2	µg/L	2µg/L	12/10/2012	swd

Project Identification:	Raytheon, Wayland, MA

Sample ID	REW-8
Sampler	dj
Sample Date	12/9/12
Sample Time	12:45 PM
Sample Received	12/10/12

Method Modified EPA 5021 A

Compound	Test Value	Units	Detection Limit	Analysis Date	Tech
Dissolved Gasses					
Methane	299	µg/L	0.3 µg/L	12/10/2012	swd
Ethylene	6.4	µg/L	0.3 µg/L	12/10/2012	swd
Ethane	<0.3	µg/L	0.3 µg/L	12/10/2012	swd
Acetylene	<2	µg/L	2µg/L	12/10/2012	swd

---Dissolved Gasses---

Project Identification:	Raytheon, Wayland, MA

Sample ID	REW-9
Sampler	dj
Sample Date	12/9/12
Sample Time	1:45 PM
Sample Received	12/10/12
Method	Modified EPA 5021 A

Compound	**Test Value**	**Units**	**Detection Limit**	**Analysis Date**	**Tech**
Dissoved Gasses					
Methane	209	µg/L	0.3 µg/L	12/10/2012	swd
Ethylene	0.4	µg/L	0.3 µg/L	12/10/2012	swd
Ethane	<0.3	µg/L	0.3 µg/L	12/10/2012	swd
Acetylene	<2	µg/L	2µg/L	12/10/2012	swd

Project Identification:	Raytheon, Wayland, MA

Sample ID	REW-10
Sampler	dj
Sample Date	12/9/12
Sample Time	2:15 PM
Sample Received	12/10/12
Method	Modified EPA 5021 A

Compound	**Test Value**	**Units**	**Detection Limit**	**Analysis Date**	**Tech**
Dissolved Gasses					
Methane	21.7	µg/L	0.3 µg/L	12/10/2012	swd
Ethylene	<0.3	µg/L	0.3 µg/L	12/10/2012	swd
Ethane	<0.3	µg/L	0.3 µg/L	12/10/2012	swd
Acetylene	<2	µg/L	2µg/L	12/10/2012	swd

---Dissolved Gasses---

Project Identification:	Raytheon, Wayland, MA

Sample ID	REW-11
Sampler	dj
Sample Date	12/9/12
Sample Time	11:25 AM
Sample Received	12/10/12
Method	Modified EPA 5021 A

Compound	**Test Value**	**Units**	**Detection Limit**	**Analysis Date**	**Tech**
Dissolved Gasses					
Methane	32.1	µg/L	0.3 µg/L	12/10/2012	swd
Ethylene	0.9	µg/L	0.3 µg/L	12/10/2012	swd
Ethane	<0.3	µg/L	0.3 µg/L	12/10/2012	swd
Acetylene	<2	µg/L	2µg/L	12/10/2012	swd

Project Identification:	Raytheon, Wayland, MA

Sample ID	REW-12
Sampler	dj
Sample Date	12/9/12
Sample Time	2:45 PM
Sample Received	12/10/12
Method	Modified EPA 5021 A

Compound	**Test Value**	**Units**	**Detection Limit**	**Analysis Date**	**Tech**
Dissolved Gasses					
Methane	31.0	µg/L	0.3 µg/L	12/10/2012	swd
Ethylene	0.8	µg/L	0.3 µg/L	12/10/2012	swd
Ethane	<0.3	µg/L	0.3 µg/L	12/10/2012	swd
Acetylene	<2	µg/L	2µg/L	12/10/2012	swd

---Dissolved Gasses---

Project Identification:	Raytheon, Wayland, MA

Sample ID	Trip Blank
Sampler	na
Sample Date	na
Sample Time	na
Sample Received	12/10/12
Method	Modified EPA 5021 A

Compound	**Test Value**	**Units**	**Detection Limit**	**Analysis Date**	**Tech**
Dissolved Gasses					
Methane	<0.3	µg/L	0.3 µg/L	12/10/2012	swd
Ethylene	<0.3	µg/L	0.3 µg/L	12/10/2012	swd
Ethane	<0.3	µg/L	0.3 µg/L	12/10/2012	swd
Acetylene	<2	µg/L	2µg/L	12/10/2012	swd

---Anions---

Bioremediation & Treatability Center

Project Identification:	Raytheon, Wayland, MA

Sample ID	MW-563
Sampler	dj
Sample Date	12/9/2012
Sample Time	3:20 PM
Sample Received	12/10/2012

Method Modified EPA 300

Compound	Test Value	Units	Detection Limit	Analysis Date	Tech
Anions					
Chloride	40	mg/L	1 mg/L	12/10/2012	swd
Nitrate	<1	mg/L	1 mg/L	12/10/2012	swd
Sulfate	48	mg/L	1 mg/L	12/10/2012	swd

Project Identification:	Raytheon, Wayland, MA

Sample ID	REW-6
Sampler	dj
Sample Date	12/9/2012
Sample Time	12:00 PM
Sample Received	12/10/2012

Method Modified EPA 300

Compound	Test Value	Units	Detection Limit	Analysis Date	Tech
Anions					
Chloride	31	mg/L	1 mg/L	12/10/2012	swd
Nitrate	<1	mg/L	1 mg/L	12/10/2012	swd
Sulfate	47	mg/L	1 mg/L	12/10/2012	swd

Project Identification:	Raytheon, Wayland, MA

Sample ID	REW-7
Sampler	dj
Sample Date	12/9/2012
Sample Time	1:15 PM
Sample Received	12/10/2012

Method Modified EPA 300

Compound	Test Value	Units	Detection Limit	Analysis Date	Tech
Anions					
Chloride	20	mg/L	1 mg/L	12/10/2012	swd
Nitrate	<1	mg/L	1 mg/L	12/10/2012	swd
Sulfate	22	mg/L	1 mg/L	12/10/2012	swd

---Anions---

Project Identification:	Raytheon, Wayland, MA

Sample ID	REW-8
Sampler	dj
Sample Date	12/9/2012
Sample Time	12:45 PM
Sample Received	12/10/2012

Method Modified EPA 300

Compound	Test Value	Units	Detection Limit	Analysis Date	Tech
Anions					
Chloride	27	mg/L	1 mg/L	12/10/2012	swd
Nitrate	<1	mg/L	1 mg/L	12/10/2012	swd
Sulfate	42	mg/L	1 mg/L	12/10/2012	swd

Project Identification:	Raytheon, Wayland, MA

Sample ID	REW-9
Sampler	dj
Sample Date	12/9/2012
Sample Time	1:45 PM
Sample Received	12/10/2012

Method Modified EPA 300

Compound	Test Value	Units	Detection Limit	Analysis Date	Tech
Anions					
Chloride	26	mg/L	1 mg/L	12/10/2012	swd
Nitrate	<1	mg/L	1 mg/L	12/10/2012	swd
Sulfate	35	mg/L	1 mg/L	12/10/2012	swd

Project Identification:	Raytheon, Wayland, MA

Sample ID	REW-10
Sampler	dj
Sample Date	12/9/2012
Sample Time	2:15 PM
Sample Received	12/10/2012

Method Modified EPA 300

Compound	Test Value	Units	Detection Limit	Analysis Date	Tech
Anions					
Chloride	55	mg/L	1 mg/L	12/10/2012	swd
Nitrate	<1	mg/L	1 mg/L	12/10/2012	swd
Sulfate	36	mg/L	1 mg/L	12/10/2012	swd

Bioremediation & Treatability Center

Project Identification:	Raytheon, Wayland, MA

Sample ID	REW-11
Sampler	dj
Sample Date	12/9/2012
Sample Time	11:25 AM
Sample Received	12/10/2012

Method Modified EPA 300

Compound	Test Value	Units	Detection Limit	Analysis Date	Tech
Anions					
Chloride	18	mg/L	1 mg/L	12/10/2012	swd
Nitrate	<1	mg/L	1 mg/L	12/10/2012	swd
Sulfate	42	mg/L	1 mg/L	12/10/2012	swd

Project Identification:	Raytheon, Wayland, MA

Sample ID	REW-12
Sampler	dj
Sample Date	12/9/2012
Sample Time	2:45 PM
Sample Received	12/10/2012

Method Modified EPA 300

Compound	Test Value	Units	Detection Limit	Analysis Date	Tech
Anions					
Chloride	23	mg/L	1 mg/L	12/10/2012	swd
Nitrate	<1	mg/L	1 mg/L	12/10/2012	swd
Sulfate	49	mg/L	1 mg/L	12/10/2012	swd

Project Identification:	Raytheon, Wayland, MA

Sample ID	Trip Blank
Sampler	na
Sample Date	na
Sample Time	na
Sample Received	12/10/2012

Method Modified EPA 300

Compound	Test Value	Units	Detection Limit	Analysis Date	Tech
Anions					
Chloride	<1	mg/L	1 mg/L	12/10/2012	swd
Nitrate	<1	mg/L	1 mg/L	12/10/2012	swd
Sulfate	<1	mg/L	1 mg/L	12/10/2012	swd

---Organic Acids---

Project Identification:	Raytheon, Wayland, MA
Sample ID	MW-563
Sampler	dj
Sample Date	12/9/2012
Sample Time	3:20 PM
Sample Received	12/10/2012

Method HPLC / Organic Acid Method

Compound	Test Value	Units	Detection Limit	Analysis Date	Tech
Organic Acids					
Lactate	<1	mg/L	1 mg/L	12/10/2012	swd
Acetate	<1	mg/L	1 mg/L	12/10/2012	swd
Propionate	<1	mg/L	1 mg/L	12/10/2012	swd
Butyrate	<1	mg/L	1 mg/L	12/10/2012	swd

Project Identification:	Raytheon, Wayland, MA
Sample ID	REW-6
Sampler	dj
Sample Date	12/9/12
Sample Time	12:00 PM
Sample Received	12/10/12

Method HPLC / Organic Acid Method

Compound	Test Value	Units	Detection Limit	Analysis Date	Tech
Organic Acids					
Lactate	<1	mg/L	1 mg/L	12/10/2012	swd
Acetate	<1	mg/L	1 mg/L	12/10/2012	swd
Propionate	<1	mg/L	1 mg/L	12/10/2012	swd
Butyrate	<1	mg/L	1 mg/L	12/10/2012	swd

Project Identification:	Raytheon, Wayland, MA
Sample ID	REW-7
Sampler	dj
Sample Date	12/9/12
Sample Time	1:15 PM
Sample Received	12/10/12

Method HPLC / Organic Acid Method

Compound	Test Value	Units	Detection Limit	Analysis Date	Tech
Organic Acids					
Lactate	<1	mg/L	1 mg/L	12/10/2012	swd
Acetate	<1	mg/L	1 mg/L	12/10/2012	swd
Propionate	<1	mg/L	1 mg/L	12/10/2012	swd
Butyrate	<1	mg/L	1 mg/L	12/10/2012	swd

Bioremediation & Treatability Center

Project Identification:	Raytheon, Wayland, MA
Sample ID	REW-8
Sampler	dj
Sample Date	12/9/12
Sample Time	12:45 PM
Sample Received	12/10/12

Method HPLC / Organic Acid Method

Compound	**Test Value**	**Units**	**Detection Limit**	**Analysis Date**	**Tech**
Organic Acids					
Lactate	<1	mg/L	1 mg/L	12/10/2012	swd
Acetate	<1	mg/L	1 mg/L	12/10/2012	swd
Propionate	<1	mg/L	1 mg/L	12/10/2012	swd
Butyrate	<1	mg/L	1 mg/L	12/10/2012	swd

Project Identification:	Raytheon, Wayland, MA
Sample ID	REW-9
Sampler	dj
Sample Date	12/9/12
Sample Time	1:45 PM
Sample Received	12/10/12

Method HPLC / Organic Acid Method

Compound	**Test Value**	**Units**	**Detection Limit**	**Analysis Date**	**Tech**
Organic Acids					
Lactate	<1	mg/L	1 mg/L	12/10/2012	swd
Acetate	<1	mg/L	1 mg/L	12/10/2012	swd
Propionate	<1	mg/L	1 mg/L	12/10/2012	swd
Butyrate	<1	mg/L	1 mg/L	12/10/2012	swd

Project Identification:	Raytheon, Wayland, MA
Sample ID	REW-10
Sampler	dj
Sample Date	12/9/12
Sample Time	2:15 PM
Sample Received	12/10/12

Method HPLC / Organic Acid Method

Compound	**Test Value**	**Units**	**Detection Limit**	**Analysis Date**	**Tech**
Organic Acids					
Lactate	<1	mg/L	1 mg/L	12/10/2012	swd
Acetate	<1	mg/L	1 mg/L	12/10/2012	swd
Propionate	<1	mg/L	1 mg/L	12/10/2012	swd
Butyrate	<1	mg/L	1 mg/L	12/10/2012	swd

---Organic Acids---

Project Identification:	Raytheon, Wayland, MA
Sample ID	REW-11
Sampler	dj
Sample Date	12/9/12
Sample Time	11:25 AM
Sample Received	12/10/12

Method HPLC / Organic Acid Method

Compound	Test Value	Units	Detection Limit	Analysis Date	Tech
Organic Acids					
Lactate	<1	mg/L	1 mg/L	12/10/2012	swd
Acetate	<1	mg/L	1 mg/L	12/10/2012	swd
Propionate	<1	mg/L	1 mg/L	12/10/2012	swd
Butyrate	<1	mg/L	1 mg/L	12/10/2012	swd

Project Identification:	Raytheon, Wayland, MA
Sample ID	REW-12
Sampler	dj
Sample Date	12/9/12
Sample Time	2:45 PM
Sample Received	12/10/12

Method HPLC / Organic Acid Method

Compound	Test Value	Units	Detection Limit	Analysis Date	Tech
Organic Acids					
Lactate	<1	mg/L	1 mg/L	12/10/2012	swd
Acetate	<1	mg/L	1 mg/L	12/10/2012	swd
Propionate	<1	mg/L	1 mg/L	12/10/2012	swd
Butyrate	<1	mg/L	1 mg/L	12/10/2012	swd

Project Identification:	Raytheon, Wayland, MA
Sample ID	Trip Blank
Sampler	na
Sample Date	na
Sample Time	na
Sample Received	12/10/12

Method HPLC / Organic Acid Method

Compound	Test Value	Units	Detection Limit	Analysis Date	Tech
Organic Acids					
Lactate	<1	mg/L	1 mg/L	12/10/2012	swd
Acetate	<1	mg/L	1 mg/L	12/10/2012	swd
Propionate	<1	mg/L	1 mg/L	12/10/2012	swd
Butyrate	<1	mg/L	1 mg/L	12/10/2012	swd

---Chemistries---

Project Identification:	Raytheon, Wayland, MA

Sample ID	MW-563
Sampler	dj
Sample Date	12/9/2012
Sample Time	3:20 PM
Sample Received	12/10/2012

Chemical Tests	**Test Value**	**Units**	**Method**	**Detection Limit**	**Analysis Date**	**Tech**
Alkalinity	120	mg/L	HACH 8203	5 mg/L	12/10/2012	rdr
Manganese	na	mg/L	HACH 8034	0.12 mg/L	na	na
NH_3-N	0.10	mg/L	HACH 8155	0.02 mg/L	12/11/2012	rdr
PO_4	0.68	mg/L	HACH 8048	0.05 mg/L	12/11/2012	rdr
Sulfide	na	mg/L	HACH 8131	0.01 mg/L	na	na
Total Iron	16.4	mg/L	HACH 8008	0.03 mg/L	12/11/2012	rdr
COD	na	mg/L	HACH 8000	<2 mg/L	na	na
TOC	3.4	mg/L	EPA 9060A	<0.3 mg/L	12/11/2012	swd
pH	6.76	pH units	pH probe	<0.01 pH units	12/10/2012	rdr

Project Identification:	Raytheon, Wayland, MA

Sample ID	REW-6
Sampler	dj
Sample Date	12/9/2012
Sample Time	12:00 PM
Sample Received	12/10/2012

Chemical Tests	**Test Value**	**Units**	**Method**	**Detection Limit**	**Analysis Date**	**Tech**
Alkalinity	100	mg/L	HACH 8203	5 mg/L	12/10/2012	rdr
Manganese	na	mg/L	HACH 8034	0.12 mg/L	na	na
NH_3-N	0.06	mg/L	HACH 8155	0.02 mg/L	12/11/2012	rdr
PO_4	0.33	mg/L	HACH 8048	0.05 mg/L	12/11/2012	rdr
Sulfide	na	mg/L	HACH 8131	0.01 mg/L	na	na
Total Iron	15.8	mg/L	HACH 8008	0.03 mg/L	12/11/2012	rdr
COD	na	mg/L	HACH 8000	<2 mg/L	na	na
TOC	1.8	mg/L	EPA 9060A	<0.3 mg/L	12/11/2012	swd
pH	6.89	pH units	pH probe	<0.01 pH units	12/10/2012	rdr

---Chemistries---

Bioremediation & Treatability Center

Project Identification:	Raytheon, Wayland, MA

Sample ID	REW-7
Sampler	dj
Sample Date	12/9/2012
Sample Time	1:15 PM
Sample Received	12/10/2012

Chemical Tests	**Test Value**	**Units**	**Method**	**Detection Limit**	**Analysis Date**	**Tech**
Alkalinity	120	mg/L	HACH 8203	5 mg/L	12/10/2012	rdr
Manganese	na	mg/L	HACH 8034	0.12 mg/L	na	na
NH_3-N	0.07	mg/L	HACH 8155	0.02 mg/L	12/11/2012	rdr
PO_4	0.28	mg/L	HACH 8048	0.05 mg/L	12/11/2012	rdr
Sulfide	na	mg/L	HACH 8131	0.01 mg/L	na	na
Total Iron	15.2	mg/L	HACH 8008	0.03 mg/L	12/11/2012	rdr
COD	na	mg/L	HACH 8000	<2 mg/L	na	na
TOC	4.8	mg/L	EPA 9060A	<0.3 mg/L	12/11/2012	swd
pH	6.78	pH units	pH probe	<0.01 pH units	12/10/2012	rdr

Project Identification:	Raytheon, Wayland, MA

Sample ID	REW-8
Sampler	dj
Sample Date	12/9/2012
Sample Time	12:45 PM
Sample Received	12/10/2012

Chemical Tests	**Test Value**	**Units**	**Method**	**Detection Limit**	**Analysis Date**	**Tech**
Alkalinity	80	mg/L	HACH 8203	5 mg/L	12/10/2012	rdr
Manganese	na	mg/L	HACH 8034	0.12 mg/L	na	na
NH_3-N	0.05	mg/L	HACH 8155	0.02 mg/L	12/11/2012	rdr
PO_4	0.14	mg/L	HACH 8048	0.05 mg/L	12/11/2012	rdr
Sulfide	na	mg/L	HACH 8131	0.01 mg/L	na	na
Total Iron	12.7	mg/L	HACH 8008	0.03 mg/L	12/11/2012	rdr
COD	na	mg/L	HACH 8000	<2 mg/L	na	na
TOC	2.4	mg/L	EPA 9060A	<0.3 mg/L	12/11/2012	swd
pH	6.85	pH units	pH probe	<0.01 pH units	12/10/2012	rdr

---Chemistries---

Project Identification:	Raytheon, Wayland, MA

Sample ID	REW-9
Sampler	dj
Sample Date	12/9/2012
Sample Time	1:45 PM
Sample Received	12/10/2012

Chemical Tests	**Test Value**	**Units**	**Method**	**Detection Limit**	**Analysis Date**	**Tech**
Alkalinity	80	mg/L	HACH 8203	5 mg/L	12/10/2012	rdr
Manganese	na	mg/L	HACH 8034	0.12 mg/L	na	na
NH_3-N	0.03	mg/L	HACH 8155	0.02 mg/L	12/11/2012	rdr
PO_4	0.23	mg/L	HACH 8048	0.05 mg/L	12/11/2012	rdr
Sulfide	na	mg/L	HACH 8131	0.01 mg/L	na	na
Total Iron	6.70	mg/L	HACH 8008	0.03 mg/L	12/11/2012	rdr
COD	na	mg/L	HACH 8000	<2 mg/L	na	na
TOC	1.1	mg/L	EPA 9060A	<0.3 mg/L	12/11/2012	swd
pH	6.69	pH units	pH probe	<0.01 pH units	12/10/2012	rdr

Project Identification:	Raytheon, Wayland, MA

Sample ID	REW-10
Sampler	dj
Sample Date	12/9/2012
Sample Time	2:15 PM
Sample Received	12/10/2012

Chemical Tests	**Test Value**	**Units**	**Method**	**Detection Limit**	**Analysis Date**	**Tech**
Alkalinity	80	mg/L	HACH 8203	5 mg/L	12/10/2012	rdr
Manganese	na	mg/L	HACH 8034	0.12 mg/L	na	na
NH_3-N	0.02	mg/L	HACH 8155	0.02 mg/L	12/11/2012	rdr
PO_4	0.09	mg/L	HACH 8048	0.05 mg/L	12/11/2012	rdr
Sulfide	na	mg/L	HACH 8131	0.01 mg/L	na	na
Total Iron	0.74	mg/L	HACH 8008	0.03 mg/L	12/11/2012	rdr
COD	na	mg/L	HACH 8000	<2 mg/L	na	na
TOC	1.1	mg/L	EPA 9060A	<0.3 mg/L	12/11/2012	swd
pH	7.50	pH units	pH probe	<0.01 pH units	12/10/2012	rdr

---Chemistries---

Project Identification:	Raytheon, Wayland, MA

Sample ID	REW-11
Sampler	dj
Sample Date	12/9/2012
Sample Time	11:25 AM
Sample Received	12/10/2012

Chemical Tests	**Test Value**	**Units**	**Method**	**Detection Limit**	**Analysis Date**	**Tech**
Alkalinity	100	mg/L	HACH 8203	5 mg/L	12/10/2012	rdr
Manganese	na	mg/L	HACH 8034	0.12 mg/L	na	na
NH_3-N	0.09	mg/L	HACH 8155	0.02 mg/L	12/11/2012	rdr
PO_4	0.25	mg/L	HACH 8048	0.05 mg/L	12/11/2012	rdr
Sulfide	na	mg/L	HACH 8131	0.01 mg/L	na	na
Total Iron	5.90	mg/L	HACH 8008	0.03 mg/L	12/11/2012	rdr
COD	na	mg/L	HACH 8000	<2 mg/L	na	na
TOC	1.6	mg/L	EPA 9060A	<0.3 mg/L	12/11/2012	swd
pH	6.78	pH units	pH probe	<0.01 pH units	12/10/2012	rdr

Project Identification:	Raytheon, Wayland, MA

Sample ID	REW-12
Sampler	dj
Sample Date	12/9/2012
Sample Time	2:45 PM
Sample Received	12/10/2012

Chemical Tests	**Test Value**	**Units**	**Method**	**Detection Limit**	**Analysis Date**	**Tech**
Alkalinity	80	mg/L	HACH 8203	5 mg/L	12/10/2012	rdr
Manganese	na	mg/L	HACH 8034	0.12 mg/L	na	na
NH_3-N	0.05	mg/L	HACH 8155	0.02 mg/L	12/11/2012	rdr
PO_4	0.23	mg/L	HACH 8048	0.05 mg/L	12/11/2012	rdr
Sulfide	na	mg/L	HACH 8131	0.01 mg/L	na	na
Total Iron	5.30	mg/L	HACH 8008	0.03 mg/L	12/11/2012	rdr
COD	na	mg/L	HACH 8000	<2 mg/L	na	na
TOC	1.3	mg/L	EPA 9060A	<0.3 mg/L	12/11/2012	swd
pH	6.67	pH units	pH probe	<0.01 pH units	12/10/2012	rdr

---Chemistries---

Project Identification:	Raytheon, Wayland, MA

Sample ID	Trip Blank
Sampler	na
Sample Date	na
Sample Time	na
Sample Received	12/10/2012

Chemical Tests	**Test Value**	**Units**	**Method**	**Detection Limit**	**Analysis Date**	**Tech**
Alkalinity	10	mg/L	HACH 8203	5 mg/L	12/10/2012	rdr
Manganese	na	mg/L	HACH 8034	0.12 mg/L	na	na
NH_3-N	<0.02	mg/L	HACH 8155	0.02 mg/L	12/11/2012	rdr
PO_4	<0.05	mg/L	HACH 8048	0.05 mg/L	12/11/2012	rdr
Sulfide	na	mg/L	HACH 8131	0.01 mg/L	na	na
Total Iron	<0.03	mg/L	HACH 8008	0.03 mg/L	12/11/2012	rdr
COD	na	mg/L	HACH 8000	<2 mg/L	na	na
TOC	<0.3	mg/L	EPA 9060A	<0.3 mg/L	12/11/2012	swd
pH	7.15	pH units	pH probe	<0.01 pH units	12/10/2012	rdr

---Table-Summary of Analytical Report---

Project	Raytheon, Wayland, MA						
Date Received		12/10/12	12/10/12	12/10/12	12/10/12	12/10/12	12/10/12
Sample ID		MW-563	REW-6	REW-7	REW-8	REW-9	REW-10
Date Sampled		12/9/12	12/9/12	12/9/12	12/9/12	12/9/12	12/9/12
Dissolved Gasses							
Date Analyzed		12/10/12	12/10/12	12/10/12	12/10/12	12/10/12	12/10/12
Sample ID	Units	MW-563	REW-6	REW-7	REW-8	REW-9	REW-10
Methane	µg/L	81.2	149	299	299	209	21.7
Ethylene	µg/L	12.4	0.7	16.1	6.4	0.4	<0.3
Ethane	µg/L	<0.3	<0.3	<0.3	<0.3	<0.3	<0.3
Acetylene	µg/L	<2	<2	<2	<2	<2	<2
Anions							
Date Analyzed		12/10/12	12/10/12	12/10/12	12/10/12	12/10/12	12/10/12
Sample ID	Units	MW-563	REW-6	REW-7	REW-8	REW-9	REW-10
Chloride	mg/L	40	31	20	27	26	55
Nitrate	mg/L	<1	<1	<1	<1	<1	<1
Sulfate	mg/L	48	47	22	42	35	36
Organic Acids							
Date Analyzed		12/10/12	12/10/12	12/10/12	12/10/12	12/10/12	12/10/12
Lactate	mg/L	<1	<1	<1	<1	<1	<1
Acetate	mg/L	<1	<1	<1	<1	<1	<1
Propionate	mg/L	<1	<1	<1	<1	<1	<1
Butyrate	mg/L	<1	<1	<1	<1	<1	<1
Chemistries							
Date Analyzed	12/10/12-12/11/12						
Sample ID	Units	MW-563	REW-6	REW-7	REW-8	REW-9	REW-10
Alkalinity	mg/L	120	100	120	80	80	80
Manganese	mg/L	na	na	na	na	na	na
NH_3-N	mg/L	0.10	0.06	0.07	0.05	0.03	0.02
PO_4	mg/L	0.68	0.33	0.28	0.14	0.23	0.09
Sulfide	mg/L	na	na	na	na	na	na
Total Iron	mg/L	16.4	15.8	15.2	12.7	6.70	0.74
COD	mg/L	na	na	na	na	na	na
TOC	mg/L	3.4	1.8	4.8	2.4	1.1	1.1
pH	pH units	6.76	6.89	6.78	6.85	6.69	7.50
H2/CO2 by TCD analysis							
Date Analyzed		na	na	na	na	na	na
Sample ID	Units	MW-563	REW-6	REW-7	REW-8	REW-9	REW-10
H2	µM	na	na	na	na	na	na
CO2	mg/L	na	na	na	na	na	na

Project	Raytheon, Wayland, MA			
Date Received		12/10/12	12/10/12	12/10/12
Sample ID		REW-11	REW-12	Trip Blank
Date Sampled		12/9/12	12/9/12	na

Dissolved Gasses				
Date Analyzed		12/10/12	12/10/12	12/10/12
Sample ID	Units	REW-11	REW-12	Trip Blank
Methane	µg/L	32.1	31.0	<0.3
Ethylene	µg/L	0.9	0.8	<0.3
Ethane	µg/L	<0.3	<0.3	<0.3
Acetylene	µg/L	<2	<2	<2

Anions				
Date Analyzed		12/10/12	12/10/12	12/10/12
Sample ID	Units	REW-11	REW-12	Trip Blank
Chloride	mg/L	18	23	<1
Nitrate	mg/L	<1	<1	<1
Sulfate	mg/L	42	49	<1
Organic Acids				
Date Analyzed		12/10/12	12/10/12	12/10/12
Lactate	mg/L	<1	<1	<1
Acetate	mg/L	<1	<1	<1
Propionate	mg/L	<1	<1	<1
Butyrate	mg/L	<1	<1	<1

Chemistries				
Date Analyzed	12/10/12-12/11/12			
Sample ID	Units	REW-11	REW-12	Trip Blank
Alkalinity	mg/L	100	80	10
Manganese	mg/L	na	na	na
NH_3-N	mg/L	0.09	0.05	<0.02
PO_4	mg/L	0.25	0.23	<0.05
Sulfide	mg/L	na	na	na
Total Iron	mg/L	5.90	5.30	<0.03
COD	mg/L	na	na	na
TOC	mg/L	1.6	1.3	<0.3
pH	pH units	6.78	6.67	7.15

H2/CO2 by TCD analysis				
Date Analyzed		na	na	na
Sample ID	Units	REW-11	REW-12	Trip Blank
H_2	µM	na	na	na
CO_2	mg/L	na	na	na

TESTING METHODS

Ion Analysis

Inorganic anions were analyzed on a Metrohm 761 IC system according to modified EPA Method 300. Organic acids were analyzed by HPLC method with an organic acid column for lactate, acetate, propionate, and butyrate. A sample to be analyzed for anions is diluted with ultra pure water as necessary to obtain the analytes in the working range of the method, and is placed into the instrument, where the sample is introduced by an automated sampling device. All samples were placed sequentially in the auto sampler and the samples were injected sequentially into the ion-exchange column. Flows from the column were directed to a conductivity detector and the peak responses were processed for quantification. Identification of analytes is based on retention times for individual analytes, and quantification is based on analysis of prepared standards.

Gas Chromatography

Dissolved gasses were analyzed according to modified EPA Method 5021A. 10ml of the sample is transferred from the 40 ml VOA vials to a 20 ml sampling vial for a 1 to 1, headspace to liquid ratio. The headspace sample is analyzed by a HP 7694 Headspace Sampler, injected to a HP 5890 gas chromatograph. Gasses were detected by PID detector and followed by Flame Ionization Detector. Standards were prepared and analyzed in the same manner as samples.

Total Organic Carbon Analyzer

Organic carbon is measured according to a modified EPA Method 9060A using a Shimadzu TOC-5050A carbonaceous analyzer. This instrument converts the organic carbon in a sample to carbon dioxide (CO_2) by catalytic combustion. The CO_2 formed is then measured directly by and infrared detector. The amount of CO_2 in a sample is directly proportional to the concentration of carbonaceous material in the sample.

HACH Colorimeter

Chemical Tests for, Iron (Total), Manganese, Nitrogen (Ammonia), Phosphorous (Orthophosphate), and Sulfide are analyzed with a DR/ 890 Colorimeter. Alkalinity is analyzed with a HACH Alkalinity Digital Titrator. VOA vials for the analysis of these chemical tests have no preservative. The methods used are EPA approved and are as follows:

Alkalinity	Hach Titration
Ammonia Nitrogen	Hach 8155
COD	Hach 8000
Manganese	Hach 8034
Orthophosphate Phosphorous	Hach 8048
Sulfide	Hach 8131
Total Iron	Hach 8008

pH

The pH of samples is determined using a Corning 313 ATC electrode.

CHAIN OF CUSTODY RECORD

B T C **Bioremediation Treatability Center** • 25 Spring Street • Walpole, MA 02081-4301 • phone (508) 668-0191 • fax (508) 668-5175

Project Name & Project Number: RA-008

Project Manager: Vicki Pasinger

Company / Address: Innovative Engineering Solutions Inc
25 Spring St Walpole MA 02081

Phone # 508-668-0033 Fax # 508-668-5175

Sampler's Signature: [signature]

Sampler's Printed Name: Dany Jones

Client Sample ID	Sampling Date	Sampling Time	No. of Sample Bottles per Well	Alkalinity	Ammonia	Anions (Cl^-, NO_3^-, SO_4^-)	Biotank	Bromide	COD	Dissolved Gas	H2 / CO2	Organic Acid	Orthophosphate	pH	Sulfide	TOC	Total Iron	Total Manganese	VOC Screen	
REW-6-20121209-01	12/9/12	1200	6	X	X	X						X	X	X		X	X			
REW-7-20121209-01	12/9/12	1315	6	X	X	X						X	X	X		X	X			
REW-8-20121209-01	12/9/12	1245	6	X	X	X						X	X	X		X	X			
REW-9-20121209-01	12/9/12	1345	6	X	X	X						X	X	X		X	X			
REW-10-20121209-01	12/9/12	1415	6	X	X	X						X	X	X		X	X			
REW-11-20121209-01	12/9/12	1125	6	X	X	X						X	X	X		X	X			
REW-12-20121209-01	12/9/12	1445	6	X	X	X						X	X	X		X	X			
MW-563-20121209-01	12/9/12	1520	6	X	X	X						X	X	X		X	X			
Trip Blanks	—	—	4																	

Special Instructions / Comments

Relinquished By	Received By	Relinquished By	Received By
[signature]	Raquel Robertson		
Printed Name: Dany Jones	Printed Name: Raquel Robertson	Printed Name	Printed Name
Firm: IESI	Firm: BTC	Firm	Firm
Date/Time: 12/10/12 0520	Date/Time: 12/10/12 0730	Date/Time	Date/Time

Raytheon, Wayland, MA
Analytical Report

Well Samples

Prepared By:
BTC
25 Spring Street,
Walpole, MA 02081-4301
Phone (508) 668-0191 • Fax (508) 668-5175

Sampled: 01/10/13
Analyzed: 01/10/13-01/11/13

Bioremediation & Treatability Center

25 Spring Street • Walpole, MA 02081-4301 •phone (508) 668-0191 • fax (508) 668-5175

January 11, 2013

IESI
Sami Fam
Innovative Engineering Solutions, Inc.
25 Spring St.
Walpole, MA 02081-4301

RE: Analytical Data Report
Raytheon
Wayland, MA

Dear Mr. Fam,

Enclosed are the results of the sample(s) submitted to our laboratory on January 10, 2013.

All analyses were performed to our laboratory's quality assurance program. Results apply only to the items submitted to the laboratory for analysis and individual items (samples) analyzed, as listed in the report.

Please call if you have any questions. You may also contact me via email at G.Pon@Biotreatcenter.com

Respectfully submitted,
Bioremediation Treatability Center

George Pon
Laboratory Director

---Dissolved Gasses---

Project Identification:	Raytheon, Wayland, MA
Sample ID	MW-261 S
Sampler	dj/dr
Sample Date	1/10/13
Sample Time	10:35 AM
Sample Received	1/10/13
Method	Modified EPA 5021 A

Compound	**Test Value**	**Units**	**Detection Limit**	**Analysis Date**	**Tech**
Dissolved Gasses					
Methane	19382	µg/L	0.3 µg/L	1/10/2013	swd
Ethylene	14.8	µg/L	0.3 µg/L	1/10/2013	swd
Ethane	<0.3	µg/L	0.3 µg/L	1/10/2013	swd
Acetylene	<2	µg/L	2µg/L	1/10/2013	swd

Project Identification:	Raytheon, Wayland, MA
Sample ID	MW-265 M
Sampler	dj/dr
Sample Date	1/10/13
Sample Time	12:10 PM
Sample Received	1/10/13
Method	Modified EPA 5021 A

Compound	**Test Value**	**Units**	**Detection Limit**	**Analysis Date**	**Tech**
Dissolved Gasses					
Methane	30867	µg/L	0.3 µg/L	1/10/2013	swd
Ethylene	548	µg/L	0.3 µg/L	1/10/2013	swd
Ethane	<0.3	µg/L	0.3 µg/L	1/10/2013	swd
Acetylene	<2	µg/L	2µg/L	1/10/2013	swd

---Dissolved Gasses---

Project Identification:	Raytheon, Wayland, MA
Sample ID	MW-552
Sampler	dj/dr
Sample Date	1/10/13
Sample Time	9:45 AM
Sample Received	1/10/13
Method	Modified EPA 5021 A

Compound	**Test Value**	**Units**	**Detection Limit**	**Analysis Date**	**Tech**
Dissolved Gasses					
Methane	13300	µg/L	0.3 µg/L	1/10/2013	swd
Ethylene	<0.3	µg/L	0.3 µg/L	1/10/2013	swd
Ethane	<0.3	µg/L	0.3 µg/L	1/10/2013	swd
Acetylene	<2	µg/L	2µg/L	1/10/2013	swd

Project Identification:	Raytheon, Wayland, MA
Sample ID	MW-562
Sampler	dj/dr
Sample Date	1/10/13
Sample Time	11:25 AM
Sample Received	1/10/13
Method	Modified EPA 5021 A

Compound	**Test Value**	**Units**	**Detection Limit**	**Analysis Date**	**Tech**
Dissolved Gasses					
Methane	25342	µg/L	0.3 µg/L	1/10/2013	swd
Ethylene	17.2	µg/L	0.3 µg/L	1/10/2013	swd
Ethane	8.1	µg/L	0.3 µg/L	1/10/2013	swd
Acetylene	<2	µg/L	2µg/L	1/10/2013	swd

---Dissolved Gasses---

Project Identification:	Raytheon, Wayland, MA

Sample ID MW-563

Sampler dj/dr
Sample Date 1/10/13
Sample Time 9:00 AM
Sample Received 1/10/13

Method Modified EPA 5021 A

Compound	Test Value	Units	Detection Limit	Analysis Date	Tech
Dissoved Gasses					
Methane	141	µg/L	0.3 µg/L	1/10/2013	swd
Ethylene	13.4	µg/L	0.3 µg/L	1/10/2013	swd
Ethane	<0.3	µg/L	0.3 µg/L	1/10/2013	swd
Acetylene	<2	µg/L	2µg/L	1/10/2013	swd

Project Identification:	Raytheon, Wayland, MA

Sample ID REW-1

Sampler dj/dr
Sample Date 1/10/13
Sample Time 11:50 AM
Sample Received 1/10/13

Method Modified EPA 5021 A

Compound	Test Value	Units	Detection Limit	Analysis Date	Tech
Dissolved Gasses					
Methane	23751	µg/L	0.3 µg/L	1/10/2013	swd
Ethylene	<0.3	µg/L	0.3 µg/L	1/10/2013	swd
Ethane	52.7	µg/L	0.3 µg/L	1/10/2013	swd
Acetylene	<2	µg/L	2µg/L	1/10/2013	swd

---Dissolved Gasses---

Project Identification:	Raytheon, Wayland, MA

Sample ID REW-6

Sampler dj/dr
Sample Date 1/10/13
Sample Time 9:50 AM
Sample Received 1/10/13

Method Modified EPA 5021 A

Compound	Test Value	Units	Detection Limit	Analysis Date	Tech
Dissolved Gasses					
Methane	182	µg/L	0.3 µg/L	1/10/2013	swd
Ethylene	1.0	µg/L	0.3 µg/L	1/10/2013	swd
Ethane	<0.3	µg/L	0.3 µg/L	1/10/2013	swd
Acetylene	<2	µg/L	2µg/L	1/10/2013	swd

Project Identification:	Raytheon, Wayland, MA

Sample ID REW-7

Sampler dj/dr
Sample Date 1/10/13
Sample Time 11:10 AM
Sample Received 1/10/13

Method Modified EPA 5021 A

Compound	Test Value	Units	Detection Limit	Analysis Date	Tech
Dissolved Gasses					
Methane	375	µg/L	0.3 µg/L	1/10/2013	swd
Ethylene	17.0	µg/L	0.3 µg/L	1/10/2013	swd
Ethane	<0.3	µg/L	0.3 µg/L	1/10/2013	swd
Acetylene	<2	µg/L	2µg/L	1/10/2013	swd

---Dissolved Gasses---

Project Identification:	Raytheon, Wayland, MA

Sample ID	REW-8
Sampler	dj/dr
Sample Date	1/10/13
Sample Time	10:30 AM
Sample Received	1/10/13
Method	Modified EPA 5021 A

Compound	**Test Value**	**Units**	**Detection Limit**	**Analysis Date**	**Tech**
Dissolved Gasses					
Methane	292	µg/L	0.3 µg/L	1/10/2013	swd
Ethylene	7.1	µg/L	0.3 µg/L	1/10/2013	swd
Ethane	<0.3	µg/L	0.3 µg/L	1/10/2013	swd
Acetylene	<2	µg/L	2µg/L	1/10/2013	swd

Project Identification:	Raytheon, Wayland, MA

Sample ID	REW-12
Sampler	dj/dr
Sample Date	1/10/13
Sample Time	8:55 AM
Sample Received	1/10/13
Method	Modified EPA 5021 A

Compound	**Test Value**	**Units**	**Detection Limit**	**Analysis Date**	**Tech**
Dissolved Gasses					
Methane	29.8	µg/L	0.3 µg/L	1/10/2013	swd
Ethylene	0.6	µg/L	0.3 µg/L	1/10/2013	swd
Ethane	<0.3	µg/L	0.3 µg/L	1/10/2013	swd
Acetylene	<2	µg/L	2µg/L	1/10/2013	swd

---Dissolved Gasses---

Project Identification:	Raytheon, Wayland, MA

Sample ID	Trip Blank
Sampler	na
Sample Date	na
Sample Time	na
Sample Received	1/10/13
Method	Modified EPA 5021 A

Compound	**Test Value**	**Units**	**Detection Limit**	**Analysis Date**	**Tech**
Dissolved Gasses					
Methane	<0.3	µg/L	0.3 µg/L	1/10/2013	swd
Ethylene	<0.3	µg/L	0.3 µg/L	1/10/2013	swd
Ethane	<0.3	µg/L	0.3 µg/L	1/10/2013	swd
Acetylene	<2	µg/L	2µg/L	1/10/2013	swd

---Anions---

Project Identification:	Raytheon, Wayland, MA

Sample ID	MW-261 S
Sampler	dj/dr
Sample Date	1/10/2013
Sample Time	10:35 AM
Sample Received	1/10/2013

Method Modified EPA 300

Compound	Test Value	Units	Detection Limit	Analysis Date	Tech
Anions					
Chloride	21	mg/L	1 mg/L	1/10/2013	swd
Nitrate	<1	mg/L	1 mg/L	1/10/2013	swd
Sulfate	<1	mg/L	1 mg/L	1/10/2013	swd

Project Identification:	Raytheon, Wayland, MA

Sample ID	MW-265 M
Sampler	dj/dr
Sample Date	1/10/2013
Sample Time	12:10 PM
Sample Received	1/10/2013

Method Modified EPA 300

Compound	Test Value	Units	Detection Limit	Analysis Date	Tech
Anions					
Chloride	29	mg/L	1 mg/L	1/10/2013	swd
Nitrate	<1	mg/L	1 mg/L	1/10/2013	swd
Sulfate	<1	mg/L	1 mg/L	1/10/2013	swd

Project Identification:	Raytheon, Wayland, MA

Sample ID	MW-552
Sampler	dj/dr
Sample Date	1/10/2013
Sample Time	9:45 AM
Sample Received	1/10/2013

Method Modified EPA 300

Compound	Test Value	Units	Detection Limit	Analysis Date	Tech
Anions					
Chloride	9	mg/L	1 mg/L	1/10/2013	swd
Nitrate	<1	mg/L	1 mg/L	1/10/2013	swd
Sulfate	4	mg/L	1 mg/L	1/10/2013	swd

---Anions---

Project Identification:	Raytheon, Wayland, MA

Sample ID	MW-562
Sampler	dj/dr
Sample Date	1/10/2013
Sample Time	11:25 AM
Sample Received	1/10/2013

Method Modified EPA 300

Compound	Test Value	Units	Detection Limit	Analysis Date	Tech
Anions					
Chloride	30	mg/L	1 mg/L	1/10/2013	swd
Nitrate	<1	mg/L	1 mg/L	1/10/2013	swd
Sulfate	<1	mg/L	1 mg/L	1/10/2013	swd

Project Identification:	Raytheon, Wayland, MA

Sample ID	MW-563
Sampler	dj/dr
Sample Date	1/10/2013
Sample Time	9:00 AM
Sample Received	1/10/2013

Method Modified EPA 300

Compound	Test Value	Units	Detection Limit	Analysis Date	Tech
Anions					
Chloride	43	mg/L	1 mg/L	1/10/2013	swd
Nitrate	<1	mg/L	1 mg/L	1/10/2013	swd
Sulfate	21	mg/L	1 mg/L	1/10/2013	swd

Project Identification:	Raytheon, Wayland, MA

Sample ID	REW-1
Sampler	dj/dr
Sample Date	1/10/2013
Sample Time	11:50 AM
Sample Received	1/10/2013

Method Modified EPA 300

Compound	Test Value	Units	Detection Limit	Analysis Date	Tech
Anions					
Chloride	14	mg/L	1 mg/L	1/10/2013	swd
Nitrate	<1	mg/L	1 mg/L	1/10/2013	swd
Sulfate	<1	mg/L	1 mg/L	1/10/2013	swd

---Anions---

Project Identification:	Raytheon, Wayland, MA

Sample ID	REW-6
Sampler	dj/dr
Sample Date	1/10/2013
Sample Time	9:50 AM
Sample Received	1/10/2013

Method Modified EPA 300

Compound	Test Value	Units	Detection Limit	Analysis Date	Tech
Anions					
Chloride	40	mg/L	1 mg/L	1/10/2013	swd
Nitrate	<1	mg/L	1 mg/L	1/10/2013	swd
Sulfate	39	mg/L	1 mg/L	1/10/2013	swd

Project Identification:	Raytheon, Wayland, MA

Sample ID	REW-7
Sampler	dj/dr
Sample Date	1/10/2013
Sample Time	11:10 AM
Sample Received	1/10/2013

Method Modified EPA 300

Compound	Test Value	Units	Detection Limit	Analysis Date	Tech
Anions					
Chloride	22	mg/L	1 mg/L	1/10/2013	swd
Nitrate	<1	mg/L	1 mg/L	1/10/2013	swd
Sulfate	27	mg/L	1 mg/L	1/10/2013	swd

Project Identification:	Raytheon, Wayland, MA

Sample ID	REW-8
Sampler	dj/dr
Sample Date	1/10/2013
Sample Time	10:30 AM
Sample Received	1/10/2013

Method Modified EPA 300

Compound	Test Value	Units	Detection Limit	Analysis Date	Tech
Anions					
Chloride	27	mg/L	1 mg/L	1/10/2013	swd
Nitrate	<1	mg/L	1 mg/L	1/10/2013	swd
Sulfate	45	mg/L	1 mg/L	1/10/2013	swd

---Anions---

Project Identification:	Raytheon, Wayland, MA

Sample ID	REW-12
Sampler	dj/dr
Sample Date	1/10/2013
Sample Time	8:55 AM
Sample Received	1/10/2013

Method Modified EPA 300

Compound	Test Value	Units	Detection Limit	Analysis Date	Tech
Anions					
Chloride	27	mg/L	1 mg/L	1/10/2013	swd
Nitrate	<1	mg/L	1 mg/L	1/10/2013	swd
Sulfate	62	mg/L	1 mg/L	1/10/2013	swd

Project Identification:	Raytheon, Wayland, MA

Sample ID	Trip Blank
Sampler	na
Sample Date	na
Sample Time	na
Sample Received	1/10/2013

Method Modified EPA 300

Compound	Test Value	Units	Detection Limit	Analysis Date	Tech
Anions					
Chloride	<1	mg/L	1 mg/L	1/10/2013	swd
Nitrate	<1	mg/L	1 mg/L	1/10/2013	swd
Sulfate	<1	mg/L	1 mg/L	1/10/2013	swd

---Organic Acids---

Bioremediation & Treatability Center

Project Identification:	Raytheon, Wayland, MA
Sample ID	MW-261 S
Sampler	dj/dr
Sample Date	1/10/2013
Sample Time	10:35 AM
Sample Received	1/10/2013
Method	HPLC / Organic Acid Method

Compound	**Test Value**	**Units**	**Detection Limit**	**Analysis Date**	**Tech**
Organic Acids					
Lactate	<1	mg/L	1 mg/L	1/10/2013	swd
Acetate	189	mg/L	1 mg/L	1/10/2013	swd
Propionate	<1	mg/L	1 mg/L	1/10/2013	swd
Butyrate	<1	mg/L	1 mg/L	1/10/2013	swd

Project Identification:	Raytheon, Wayland, MA
Sample ID	MW-265 M
Sampler	dj/dr
Sample Date	1/10/13
Sample Time	12:10 PM
Sample Received	1/10/13
Method	HPLC / Organic Acid Method

Compound	**Test Value**	**Units**	**Detection Limit**	**Analysis Date**	**Tech**
Organic Acids					
Lactate	<1	mg/L	1 mg/L	1/10/2013	swd
Acetate	594	mg/L	1 mg/L	1/10/2013	swd
Propionate	3	mg/L	1 mg/L	1/10/2013	swd
Butyrate	9	mg/L	1 mg/L	1/10/2013	swd

Project Identification:	Raytheon, Wayland, MA
Sample ID	MW-552
Sampler	dj/dr
Sample Date	1/10/13
Sample Time	9:45 AM
Sample Received	1/10/13
Method	HPLC / Organic Acid Method

Compound	**Test Value**	**Units**	**Detection Limit**	**Analysis Date**	**Tech**
Organic Acids					
Lactate	<1	mg/L	1 mg/L	1/10/2013	swd
Acetate	42	mg/L	1 mg/L	1/10/2013	swd
Propionate	<1	mg/L	1 mg/L	1/10/2013	swd
Butyrate	1	mg/L	1 mg/L	1/10/2013	swd

---Organic Acids---

Project Identification:	Raytheon, Wayland, MA
Sample ID	MW-562
Sampler	dj/dr
Sample Date	1/10/13
Sample Time	11:25 AM
Sample Received	1/10/13
Method	HPLC / Organic Acid Method

Compound	**Test Value**	**Units**	**Detection Limit**	**Analysis Date**	**Tech**
Organic Acids					
Lactate	<1	mg/L	1 mg/L	1/10/2013	swd
Acetate	132	mg/L	1 mg/L	1/10/2013	swd
Propionate	<1	mg/L	1 mg/L	1/10/2013	swd
Butyrate	<1	mg/L	1 mg/L	1/10/2013	swd

Project Identification:	Raytheon, Wayland, MA
Sample ID	MW-563
Sampler	dj/dr
Sample Date	1/10/13
Sample Time	9:00 AM
Sample Received	1/10/13
Method	HPLC / Organic Acid Method

Compound	**Test Value**	**Units**	**Detection Limit**	**Analysis Date**	**Tech**
Organic Acids					
Lactate	<1	mg/L	1 mg/L	1/10/2013	swd
Acetate	115	mg/L	1 mg/L	1/10/2013	swd
Propionate	<1	mg/L	1 mg/L	1/10/2013	swd
Butyrate	1	mg/L	1 mg/L	1/10/2013	swd

Project Identification:	Raytheon, Wayland, MA
Sample ID	REW-1
Sampler	dj/dr
Sample Date	1/10/13
Sample Time	11:50 AM
Sample Received	1/10/13
Method	HPLC / Organic Acid Method

Compound	**Test Value**	**Units**	**Detection Limit**	**Analysis Date**	**Tech**
Organic Acids					
Lactate	<1	mg/L	1 mg/L	1/10/2013	swd
Acetate	173	mg/L	1 mg/L	1/10/2013	swd
Propionate	<1	mg/L	1 mg/L	1/10/2013	swd
Butyrate	5	mg/L	1 mg/L	1/10/2013	swd

---Organic Acids---

Project Identification:	Raytheon, Wayland, MA
Sample ID	REW-6
Sampler	dj/dr
Sample Date	1/10/13
Sample Time	9:50 AM
Sample Received	1/10/13
Method	HPLC / Organic Acid Method

Compound	**Test Value**	**Units**	**Detection Limit**	**Analysis Date**	**Tech**
Organic Acids					
Lactate	<1	mg/L	1 mg/L	1/10/2013	swd
Acetate	3	mg/L	1 mg/L	1/10/2013	swd
Propionate	<1	mg/L	1 mg/L	1/10/2013	swd
Butyrate	2	mg/L	1 mg/L	1/10/2013	swd

Project Identification:	Raytheon, Wayland, MA
Sample ID	REW-7
Sampler	dj/dr
Sample Date	1/10/13
Sample Time	11:10 AM
Sample Received	1/10/13
Method	HPLC / Organic Acid Method

Compound	**Test Value**	**Units**	**Detection Limit**	**Analysis Date**	**Tech**
Organic Acids					
Lactate	<1	mg/L	1 mg/L	1/10/2013	swd
Acetate	7	mg/L	1 mg/L	1/10/2013	swd
Propionate	<1	mg/L	1 mg/L	1/10/2013	swd
Butyrate	1	mg/L	1 mg/L	1/10/2013	swd

Project Identification:	Raytheon, Wayland, MA
Sample ID	REW-8
Sampler	dj/dr
Sample Date	1/10/13
Sample Time	10:30:00 AM
Sample Received	1/10/13
Method	HPLC / Organic Acid Method

Compound	**Test Value**	**Units**	**Detection Limit**	**Analysis Date**	**Tech**
Organic Acids					
Lactate	<1	mg/L	1 mg/L	1/10/2013	swd
Acetate	2	mg/L	1 mg/L	1/10/2013	swd
Propionate	<1	mg/L	1 mg/L	1/10/2013	swd
Butyrate	1	mg/L	1 mg/L	1/10/2013	swd

---Organic Acids---

Project Identification:	Raytheon, Wayland, MA
Sample ID	REW-12
Sampler	dj/dr
Sample Date	1/10/13
Sample Time	8:55 AM
Sample Received	1/10/13

Method HPLC / Organic Acid Method

Compound	**Test Value**	**Units**	**Detection Limit**	**Analysis Date**	**Tech**
Organic Acids					
Lactate	<1	mg/L	1 mg/L	1/10/2013	swd
Acetate	<1	mg/L	1 mg/L	1/10/2013	swd
Propionate	<1	mg/L	1 mg/L	1/10/2013	swd
Butyrate	1	mg/L	1 mg/L	1/10/2013	swd

Project Identification:	Raytheon, Wayland, MA
Sample ID	Trip Blank
Sampler	na
Sample Date	na
Sample Time	na
Sample Received	1/10/13

Method HPLC / Organic Acid Method

Compound	**Test Value**	**Units**	**Detection Limit**	**Analysis Date**	**Tech**
Organic Acids					
Lactate	<1	mg/L	1 mg/L	1/10/2013	swd
Acetate	<1	mg/L	1 mg/L	1/10/2013	swd
Propionate	<1	mg/L	1 mg/L	1/10/2013	swd
Butyrate	<1	mg/L	1 mg/L	1/10/2013	swd

---Chemistries---

Project Identification:	Raytheon, Wayland, MA

Sample ID	MW-261 S
Sampler	dj/dr
Sample Date	1/10/2013
Sample Time	10:35 AM
Sample Received	1/10/2013

Chemical Tests	**Test Value**	**Units**	**Method**	**Detection Limit**	**Analysis Date**	**Tech**
Alkalinity	360	mg/L	HACH 8203	5 mg/L	rdr	41284
Manganese	na	mg/L	HACH 8034	0.12 mg/L	na	na
NH_3-N	0.24	mg/L	HACH 8155	0.02 mg/L	rdr	41285
PO_4	0.31	mg/L	HACH 8048	0.05 mg/L	rdr	41285
Sulfide	na	mg/L	HACH 8131	0.01 mg/L	na	na
Total Iron	54.6	mg/L	HACH 8008	0.03 mg/L	rdr	41285
COD	na	mg/L	HACH 8000	<2 mg/L	na	na
TOC	256	mg/L	EPA 9060A	<0.3 mg/L	swd	41285
pH	6.84	pH units	pH probe	<0.01 pH units	rdr	41284

Project Identification:	Raytheon, Wayland, MA

Sample ID	MW-265 M
Sampler	dj/dr
Sample Date	1/10/2013
Sample Time	12:10 PM
Sample Received	1/10/2013

Chemical Tests	**Test Value**	**Units**	**Method**	**Detection Limit**	**Analysis Date**	**Tech**
Alkalinity	670	mg/L	HACH 8203	5 mg/L	rdr	41284
Manganese	na	mg/L	HACH 8034	0.12 mg/L	na	na
NH_3-N	0.36	mg/L	HACH 8155	0.02 mg/L	rdr	41285
PO_4	0.82	mg/L	HACH 8048	0.05 mg/L	rdr	41285
Sulfide	na	mg/L	HACH 8131	0.01 mg/L	na	na
Total Iron	82.0	mg/L	HACH 8008	0.03 mg/L	rdr	41285
COD	na	mg/L	HACH 8000	<2 mg/L	na	na
TOC	498	mg/L	EPA 9060A	<0.3 mg/L	swd	41285
pH	6.75	pH units	pH probe	<0.01 pH units	rdr	41284

---Chemistries---

Bioremediation & Treatability Center

Project Identification: Raytheon, Wayland, MA

Sample ID MW-552

Sampler dj/dr
Sample Date 1/10/2013
Sample Time 9:45 AM
Sample Received 1/10/2013

Chemical Tests	Test Value	Units	Method	Detection Limit	Analysis Date	Tech
Alkalinity	280	mg/L	HACH 8203	5 mg/L	rdr	41284
Manganese	na	mg/L	HACH 8034	0.12 mg/L	na	na
NH_3-N	0.25	mg/L	HACH 8155	0.02 mg/L	rdr	41285
PO_4	0.23	mg/L	HACH 8048	0.05 mg/L	rdr	41285
Sulfide	na	mg/L	HACH 8131	0.01 mg/L	na	na
Total Iron	23.2	mg/L	HACH 8008	0.03 mg/L	rdr	41285
COD	na	mg/L	HACH 8000	<2 mg/L	na	na
TOC	39.0	mg/L	EPA 9060A	<0.3 mg/L	swd	41285
pH	6.85	pH units	pH probe	<0.01 pH units	rdr	41284

Project Identification: Raytheon, Wayland, MA

Sample ID MW-562

Sampler dj/dr
Sample Date 1/10/2013
Sample Time 11:25 AM
Sample Received 1/10/2013

Chemical Tests	Test Value	Units	Method	Detection Limit	Analysis Date	Tech
Alkalinity	705	mg/L	HACH 8203	5 mg/L	rdr	41284
Manganese	na	mg/L	HACH 8034	0.12 mg/L	na	na
NH_3-N	5.00	mg/L	HACH 8155	0.02 mg/L	rdr	41285
PO_4	0.38	mg/L	HACH 8048	0.05 mg/L	rdr	41285
Sulfide	na	mg/L	HACH 8131	0.01 mg/L	na	na
Total Iron	79.5	mg/L	HACH 8008	0.03 mg/L	rdr	41285
COD	na	mg/L	HACH 8000	<2 mg/L	na	na
TOC	81.0	mg/L	EPA 9060A	<0.3 mg/L	swd	41285
pH	6.54	pH units	pH probe	<0.01 pH units	rdr	41284

---Chemistries---

Project Identification:	Raytheon, Wayland, MA

Sample ID	MW-563
Sampler	dj/dr
Sample Date	1/10/2013
Sample Time	9:00 AM
Sample Received	1/10/2013

Chemical Tests	**Test Value**	**Units**	**Method**	**Detection Limit**	**Analysis Date**	**Tech**
Alkalinity	180	mg/L	HACH 8203	5 mg/L	rdr	41284
Manganese	na	mg/L	HACH 8034	0.12 mg/L	na	na
NH_3-N	0.04	mg/L	HACH 8155	0.02 mg/L	rdr	41285
PO_4	0.42	mg/L	HACH 8048	0.05 mg/L	rdr	41285
Sulfide	na	mg/L	HACH 8131	0.01 mg/L	na	na
Total Iron	30.0	mg/L	HACH 8008	0.03 mg/L	rdr	41285
COD	na	mg/L	HACH 8000	<2 mg/L	na	na
TOC	102	mg/L	EPA 9060A	<0.3 mg/L	swd	41285
pH	6.70	pH units	pH probe	<0.01 pH units	rdr	41284

Project Identification:	Raytheon, Wayland, MA

Sample ID	REW-1
Sampler	dj/dr
Sample Date	1/10/2013
Sample Time	11:50 AM
Sample Received	1/10/2013

Chemical Tests	**Test Value**	**Units**	**Method**	**Detection Limit**	**Analysis Date**	**Tech**
Alkalinity	360	mg/L	HACH 8203	5 mg/L	rdr	41284
Manganese	na	mg/L	HACH 8034	0.12 mg/L	na	na
NH_3-N	0.90	mg/L	HACH 8155	0.02 mg/L	rdr	41285
PO_4	<0.05	mg/L	HACH 8048	0.05 mg/L	rdr	41285
Sulfide	na	mg/L	HACH 8131	0.01 mg/L	na	na
Total Iron	47.6	mg/L	HACH 8008	0.03 mg/L	rdr	41285
COD	na	mg/L	HACH 8000	<2 mg/L	na	na
TOC	182	mg/L	EPA 9060A	<0.3 mg/L	swd	41285
pH	6.81	pH units	pH probe	<0.01 pH units	rdr	41284

---Chemistries---

Project Identification:	Raytheon, Wayland, MA

Sample ID	REW-6
Sampler	dj/dr
Sample Date	1/10/2013
Sample Time	9:50 AM
Sample Received	1/10/2013

Chemical Tests	Test Value	Units	Method	Detection Limit	Analysis Date	Tech
Alkalinity	140	mg/L	HACH 8203	5 mg/L	rdr	41284
Manganese	na	mg/L	HACH 8034	0.12 mg/L	na	na
NH_3-N	0.06	mg/L	HACH 8155	0.02 mg/L	rdr	41285
PO_4	0.26	mg/L	HACH 8048	0.05 mg/L	rdr	41285
Sulfide	na	mg/L	HACH 8131	0.01 mg/L	na	na
Total Iron	13.5	mg/L	HACH 8008	0.03 mg/L	rdr	41285
COD	na	mg/L	HACH 8000	<2 mg/L	na	na
TOC	4.5	mg/L	EPA 9060A	<0.3 mg/L	swd	41285
pH	6.75	pH units	pH probe	<0.01 pH units	rdr	41284

Project Identification:	Raytheon, Wayland, MA

Sample ID	REW-7
Sampler	dj/dr
Sample Date	1/10/2013
Sample Time	11:10 AM
Sample Received	1/10/2013

Chemical Tests	Test Value	Units	Method	Detection Limit	Analysis Date	Tech
Alkalinity	140	mg/L	HACH 8203	5 mg/L	rdr	41284
Manganese	na	mg/L	HACH 8034	0.12 mg/L	na	na
NH_3-N	0.06	mg/L	HACH 8155	0.02 mg/L	rdr	41285
PO_4	<0.05	mg/L	HACH 8048	0.05 mg/L	rdr	41285
Sulfide	na	mg/L	HACH 8131	0.01 mg/L	na	na
Total Iron	15.8	mg/L	HACH 8008	0.03 mg/L	rdr	41285
COD	na	mg/L	HACH 8000	<2 mg/L	na	na
TOC	6.5	mg/L	EPA 9060A	<0.3 mg/L	swd	41285
pH	6.67	pH units	pH probe	<0.01 pH units	rdr	41284

---Chemistries---

Project Identification:	Raytheon, Wayland, MA

Sample ID	REW-8
Sampler	dj/dr
Sample Date	1/10/2013
Sample Time	10:30 AM
Sample Received	1/10/2013

Chemical Tests	**Test Value**	**Units**	**Method**	**Detection Limit**	**Analysis Date**	**Tech**
Alkalinity	100	mg/L	HACH 8203	5 mg/L	rdr	41284
Manganese	na	mg/L	HACH 8034	0.12 mg/L	na	na
NH_3-N	0.05	mg/L	HACH 8155	0.02 mg/L	rdr	41285
PO_4	0.14	mg/L	HACH 8048	0.05 mg/L	rdr	41285
Sulfide	na	mg/L	HACH 8131	0.01 mg/L	na	na
Total Iron	18.4	mg/L	HACH 8008	0.03 mg/L	rdr	41285
COD	na	mg/L	HACH 8000	<2 mg/L	na	na
TOC	4.3	mg/L	EPA 9060A	<0.3 mg/L	swd	41285
pH	6.73	pH units	pH probe	<0.01 pH units	rdr	41284

Project Identification:	Raytheon, Wayland, MA

Sample ID	REW-12
Sampler	dj/dr
Sample Date	1/10/2013
Sample Time	8:55 AM
Sample Received	1/10/2013

Chemical Tests	**Test Value**	**Units**	**Method**	**Detection Limit**	**Analysis Date**	**Tech**
Alkalinity	100	mg/L	HACH 8203	5 mg/L	rdr	41284
Manganese	na	mg/L	HACH 8034	0.12 mg/L	na	na
NH_3-N	0.06	mg/L	HACH 8155	0.02 mg/L	rdr	41285
PO_4	0.08	mg/L	HACH 8048	0.05 mg/L	rdr	41285
Sulfide	na	mg/L	HACH 8131	0.01 mg/L	na	na
Total Iron	18.6	mg/L	HACH 8008	0.03 mg/L	rdr	41285
COD	na	mg/L	HACH 8000	<2 mg/L	na	na
TOC	2.1	mg/L	EPA 9060A	<0.3 mg/L	swd	41285
pH	6.63	pH units	pH probe	<0.01 pH units	rdr	41284

---Chemistries---

Project Identification:	Raytheon, Wayland, MA

Sample ID	Trip Blank
Sampler	na
Sample Date	na
Sample Time	na
Sample Received	1/10/2013

Chemical Tests	**Test Value**	**Units**	**Method**	**Detection Limit**	**Analysis Date**	**Tech**
Alkalinity	10	mg/L	HACH 8203	5 mg/L	rdr	41284
Manganese	na	mg/L	HACH 8034	0.12 mg/L	na	na
NH_3-N	<0.02	mg/L	HACH 8155	0.02 mg/L	rdr	41285
PO_4	<0.05	mg/L	HACH 8048	0.05 mg/L	rdr	41285
Sulfide	na	mg/L	HACH 8131	0.01 mg/L	na	na
Total Iron	<0.03	mg/L	HACH 8008	0.03 mg/L	rdr	41285
COD	na	mg/L	HACH 8000	<2 mg/L	na	na
TOC	<0.3	mg/L	EPA 9060A	<0.3 mg/L	swd	41285
pH	7.17	pH units	pH probe	<0.01 pH units	rdr	41284

Project	Raytheon, Wayland, MA						
Date Received		1/10/13	1/10/13	1/10/13	1/10/13	1/10/13	1/10/13
Sample ID		MW-261 S	MW-265 M	MW-552	MW-562	MW-563	REW-1
Date Sampled		1/10/13	1/10/13	1/10/13	1/10/13	1/10/13	1/10/13

Dissolved Gasses							
Date Analyzed		1/10/13	1/10/13	1/10/13	1/10/13	1/10/13	1/10/13
Sample ID	Units	MW-261 S	MW-265 M	MW-552	MW-562	MW-563	REW-1
Methane	µg/L	19382	30867	13300	25342	141	23751
Ethylene	µg/L	14.8	548	<0.3	17.2	13.4	<0.3
Ethane	µg/L	<0.3	<0.3	<0.3	8.1	<0.3	52.7
Acetylene	µg/L	<2	<2	<2	<2	<2	<2

Anions							
Date Analyzed		1/10/13	1/10/13	1/10/13	1/10/13	1/10/13	1/10/13
Sample ID	Units	MW-261 S	MW-265 M	MW-552	MW-562	MW-563	REW-1
Chloride	mg/L	21	29	9	30	43	14
Nitrate	mg/L	<1	<1	<1	<1	<1	<1
Sulfate	mg/L	<1	<1	4	<1	21	<1
Organic Acids							
Date Analyzed		1/10/13	1/10/13	1/10/13	1/10/13	1/10/13	1/10/13
Lactate	mg/L	<1	<1	<1	<1	<1	<1
Acetate	mg/L	189	594	42	132	115	173
Propionate	mg/L	<1	3	<1	<1	<1	<1
Butyrate	mg/L	<1	9	1	<1	1	5

Chemistries							
Date Analyzed	1/10/13-1/11/13						
Sample ID	Units	MW-261 S	MW-265 M	MW-552	MW-562	MW-563	REW-1
Alkalinity	mg/L	360	670	280	705	180	360
Manganese	mg/L	na	na	na	na	na	na
NH_3-N	mg/L	0.24	0.36	0.25	5.00	0.04	0.90
PO_4	mg/L	0.31	0.82	0.23	0.38	0.42	<0.05
Sulfide	mg/L	na	na	na	na	na	na
Total Iron	mg/L	54.6	82.0	23.2	79.5	30.0	47.6
COD	mg/L	na	na	na	na	na	na
TOC	mg/L	256	498	39.0	81.0	102	182
pH	pH units	6.84	6.75	6.85	6.54	6.70	6.81

H2/CO2 by TCD analysis							
Date Analyzed		na	na	na	na	na	na
Sample ID	Units	MW-261 S	MW-265 M	MW-552	MW-562	MW-563	REW-1
H2	µM	na	na	na	na	na	na
CO2	mg/L	na	na	na	na	na	na

Project	Raytheon, Wayland, MA					
Date Received		1/10/13	1/10/13	1/10/13	1/10/13	1/10/13
Sample ID		REW-6	REW-7	REW-8	REW-12	Trip Blank
Date Sampled		1/10/13	1/10/13	1/10/13	1/10/13	na

Dissolved Gasses						
Date Analyzed		1/10/13	1/10/13	1/10/13	1/10/13	1/10/13
Sample ID	Units	REW-6	REW-7	REW-8	REW-12	Trip Blank
Methane	µg/L	182	375	292	29.8	<0.3
Ethylene	µg/L	1.0	17.0	7.1	0.6	<0.3
Ethane	µg/L	<0.3	<0.3	<0.3	<0.3	<0.3
Acetylene	µg/L	<2	<2	<2	<2	<2

Anions						
Date Analyzed		1/10/13	1/10/13	1/10/13	1/10/13	1/10/13
Sample ID	Units	REW-6	REW-7	REW-8	REW-12	Trip Blank
Chloride	mg/L	40	22	27	27	<1
Nitrate	mg/L	<1	<1	<1	<1	<1
Sulfate	mg/L	39	27	45	62	<1
Organic Acids						
Date Analyzed		1/10/13	1/10/13	1/10/13	1/10/13	1/10/13
Lactate	mg/L	<1	<1	<1	<1	<1
Acetate	mg/L	3	7	2	<1	<1
Propionate	mg/L	<1	<1	<1	<1	<1
Butyrate	mg/L	2	1	1	1	<1

Chemistries						
Date Analyzed	1/10/13-1/11/13					
Sample ID	Units	REW-6	REW-7	REW-8	REW-12	Trip Blank
Alkalinity	mg/L	140	140	100	100	10
Manganese	mg/L	na	na	na	na	na
NH_3-N	mg/L	0.06	0.06	0.05	0.06	<0.02
PO_4	mg/L	0.26	<0.05	0.14	0.08	<0.05
Sulfide	mg/L	na	na	na	na	na
Total Iron	mg/L	13.5	15.8	18.4	18.6	<0.03
COD	mg/L	na	na	na	na	na
TOC	mg/L	4.5	6.5	4.3	2.1	<0.3
pH	pH units	6.75	6.67	6.73	6.63	7.17

H2/CO2 by TCD analysis						
Date Analyzed		na	na	na	na	na
Sample ID	Units	REW-6	REW-7	REW-8	REW-12	Trip Blank
H_2	µM	na	na	na	na	na
CO_2	mg/L	na	na	na	na	na

TESTING METHODS

Ion Analysis

Inorganic anions were analyzed on a Metrohm 761 IC system according to modified EPA Method 300. Organic acids were analyzed by HPLC method with an organic acid column for lactate, acetate, propionate, and butyrate. A sample to be analyzed for anions is diluted with ultra pure water as necessary to obtain the analytes in the working range of the method, and is placed into the instrument, where the sample is introduced by an automated sampling device. All samples were placed sequentially in the auto sampler and the samples were injected sequentially into the ion-exchange column. Flows from the column were directed to a conductivity detector and the peak responses were processed for quantification. Identification of analytes is based on retention times for individual analytes, and quantification is based on analysis of prepared standards.

Gas Chromatography

Dissolved gasses were analyzed according to modified EPA Method 5021A. 10ml of the sample is transferred from the 40 ml VOA vials to a 20 ml sampling vial for a 1 to 1, headspace to liquid ratio. The headspace sample is analyzed by a HP 7694 Headspace Sampler, injected to a HP 5890 gas chromatograph. Gasses were detected by PID detector and followed by Flame Ionization Detector. Standards were prepared and analyzed in the same manner as samples.

Total Organic Carbon Analyzer

Organic carbon is measured according to a modified EPA Method 9060A using a Shimadzu TOC-5050A carbonaceous analyzer. This instrument converts the organic carbon in a sample to carbon dioxide (CO_2) by catalytic combustion. The CO_2 formed is then measured directly by and infrared detector. The amount of CO_2 in a sample is directly proportional to the concentration of carbonaceous material in the sample.

HACH Colorimeter

Chemical Tests for, Iron (Total), Manganese, Nitrogen (Ammonia), Phosphorous (Orthophosphate), and Sulfide are analyzed with a DR/ 890 Colorimeter. Alkalinity is analyzed with a HACH Alkalinity Digital Titrator. VOA vials for the analysis of these chemical tests have no preservative. The methods used are EPA approved and are as follows:

Alkalinity	Hach Titration
Ammonia Nitrogen	Hach 8155
COD	Hach 8000
Manganese	Hach 8034
Orthophosphate Phosphorous	Hach 8048
Sulfide	Hach 8131
Total Iron	Hach 8008

pH

The pH of samples is determined using a Corning 313 ATC electrode.

CHAIN OF CUSTODY RECORD

B T C **Bioremediation Treatability Center** • 25 Spring Street • Walpole, MA 02081-4301 • phone (508) 668-0191 • fax (508) 668-5175

Project Name & Project Number: RA-008

Project Manager: Vicki Parinyan

Company / Address: Innovative Engineering Solutions Inc.
25 Spring St Walpole MA 02081

Phone #: 508-668-0033 Fax #: 508-668-5175

Sampler's Signature:

Sampler's Printed Name: Dany Jones Dennen Rollo

Client Sample ID	Sampling Date	Sampling Time	No. of Sample Bottles per Well	Alkalinity	Ammonia	Anions (Cl, NO_3, SO_4)	Biotank	Bromide	COD	Dissolved Gas	H2 / CO2	Organic Acid	Orthophosphate	pH	Sulfide	TOC	Total Iron	Total Manganese	VOC Screen	
Rew-1 - 20130110-01	1/10/13	1150	6	X	X	X				X		X	X	X			X			
Rew-6 - 20130110-01	1/10/13	0950	6	X	X	X				X		X	X	X			X			
Rew-2 - 20130110-01	1/10/13	1110	6	X	X	X				X		X	X	X			X			
Rew-8 - 20130110-01	1/10/13	1030	6	X	X	X				X		X	X	X			X			
Rew-12 - 20130110-01	1/10/13	0855	6	X	X	X				X		X	X	X			X			
mw-261S - 20130110-01	1/10/13	1035	6	X	X	X				X		X	X	X			X			
mw-261M - 20130110-01	1/10/13	1210	6	X	X	X				X		X	X	X			X			
mw-552 - 20130110-01	1/10/13	0945	6	X	X	X				X		X	X	X			X			
mw-562 - 20130110-01	1/10/13	1125	6	X	X	X				X		X	X	X			X			
mw-563 - 20130110-01	1/10/13	0900	6	X	X	X				X		X	X	X			X			
Trip Blank	—	—	4																	

Special Instructions / Comments

Relinquished By	Received By	Relinquished By	Received By
Printed Name: Dany Jones	Printed Name: Susan Davis	Printed Name	Printed Name
Firm: JESI	Firm: BTC	Firm	Firm
Date/Time: 1/10/13 1350	Date/Time: 1/10/13 1350	Date/Time	Date/Time

Raytheon, Wayland, MA
Analytical Report

Well Samples

Prepared By:
BTC
25 Spring Street,
Walpole, MA 02081-4301
Phone (508) 668-0191 • Fax (508) 668-5175

Sampled: 03/28/13-04/01/13
Analyzed: 03/29/13-04/02/13

Bioremediation & Treatability Center

25 Spring Street • Walpole, MA 02081-4301 •phone (508) 668-0191 • fax (508) 668-5175

April 2, 2013

IESI
Sami Fam
Innovative Engineering Solutions, Inc.
25 Spring St.
Walpole, MA 02081-4301

RE: Analytical Data Report
Raytheon
Wayland, MA

Dear Mr. Fam,

Enclosed are the results of the sample(s) submitted to our laboratory on March 29, 2013-April 1, 2013.

All analyses were performed to our laboratory's quality assurance program. Results apply only to the items submitted to the laboratory for analysis and individual items (samples) analyzed, as listed in the report.

Please call if you have any questions. You may also contact me via email at G.Pon@Biotreatcenter.com

Respectfully submitted,
Bioremediation Treatability Center

George Pon
Laboratory Director

---Dissolved Gasses---

Project Identification:	Raytheon, Wayland, MA
Sample ID	MW-261 S
Sampler	dj
Sample Date	4/1/13
Sample Time	8:35 AM
Sample Received	4/1/13
Method	Modified EPA 5021 A

Compound	**Test Value**	**Units**	**Detection Limit**	**Analysis Date**	**Tech**
Dissolved Gasses					
Methane	21890	µg/L	0.3 µg/L	4/1/2013	swd
Ethylene	28.2	µg/L	0.3 µg/L	4/1/2013	swd
Ethane	<0.3	µg/L	0.3 µg/L	4/1/2013	swd
Acetylene	<2	µg/L	2µg/L	4/1/2013	swd

Project Identification:	Raytheon, Wayland, MA
Sample ID	MW-265 M
Sampler	dj
Sample Date	3/29/13
Sample Time	11:30 AM
Sample Received	3/29/13
Method	Modified EPA 5021 A

Compound	**Test Value**	**Units**	**Detection Limit**	**Analysis Date**	**Tech**
Dissolved Gasses					
Methane	36553	µg/L	0.3 µg/L	3/29/2013	swd
Ethylene	20.3	µg/L	0.3 µg/L	3/29/2013	swd
Ethane	<0.3	µg/L	0.3 µg/L	3/29/2013	swd
Acetylene	<2	µg/L	2µg/L	3/29/2013	swd

---Dissolved Gasses---

Project Identification:	Raytheon, Wayland, MA
Sample ID	MW-268 M
Sampler	dj
Sample Date	3/29/13
Sample Time	8:35 AM
Sample Received	3/29/13
Method	Modified EPA 5021 A

Compound	**Test Value**	**Units**	**Detection Limit**	**Analysis Date**	**Tech**
Dissolved Gasses					
Methane	29.0	µg/L	0.3 µg/L	4/1/2013	swd
Ethylene	4.3	µg/L	0.3 µg/L	4/1/2013	swd
Ethane	5.9	µg/L	0.3 µg/L	4/1/2013	swd
Acetylene	<2	µg/L	2µg/L	4/1/2013	swd

Project Identification:	Raytheon, Wayland, MA
Sample ID	MW-552
Sampler	dj
Sample Date	3/29/13
Sample Time	9:35 AM
Sample Received	3/29/13
Method	Modified EPA 5021 A

Compound	**Test Value**	**Units**	**Detection Limit**	**Analysis Date**	**Tech**
Dissolved Gasses					
Methane	12420	µg/L	0.3 µg/L	4/1/2013	swd
Ethylene	20.4	µg/L	0.3 µg/L	4/1/2013	swd
Ethane	<0.3	µg/L	0.3 µg/L	4/1/2013	swd
Acetylene	<2	µg/L	2µg/L	4/1/2013	swd

---Dissolved Gasses---

Project Identification:	Raytheon, Wayland, MA
Sample ID	MW-553
Sampler	dj
Sample Date	3/29/13
Sample Time	10:40 AM
Sample Received	3/29/13
Method	Modified EPA 5021 A

Compound	**Test Value**	**Units**	**Detection Limit**	**Analysis Date**	**Tech**
Dissoved Gasses					
Methane	24936	µg/L	0.3 µg/L	4/1/2013	swd
Ethylene	18.2	µg/L	0.3 µg/L	4/1/2013	swd
Ethane	<0.3	µg/L	0.3 µg/L	4/1/2013	swd
Acetylene	<2	µg/L	2µg/L	4/1/2013	swd

Project Identification:	Raytheon, Wayland, MA
Sample ID	MW-560
Sampler	dj
Sample Date	3/29/13
Sample Time	10:55 AM
Sample Received	3/29/13
Method	Modified EPA 5021 A

Compound	**Test Value**	**Units**	**Detection Limit**	**Analysis Date**	**Tech**
Dissolved Gasses					
Methane	167	µg/L	0.3 µg/L	4/1/2013	swd
Ethylene	1.7	µg/L	0.3 µg/L	4/1/2013	swd
Ethane	<0.3	µg/L	0.3 µg/L	4/1/2013	swd
Acetylene	<2	µg/L	2µg/L	4/1/2013	swd

---Dissolved Gasses---

Project Identification:	Raytheon, Wayland, MA

Sample ID MW-561

Sampler dj
Sample Date 3/29/13
Sample Time 10:15 AM
Sample Received 3/29/13

Method Modified EPA 5021 A

Compound	Test Value	Units	Detection Limit	Analysis Date	Tech
Dissolved Gasses					
Methane	1544	µg/L	0.3 µg/L	4/1/2013	swd
Ethylene	96.1	µg/L	0.3 µg/L	4/1/2013	swd
Ethane	<0.3	µg/L	0.3 µg/L	4/1/2013	swd
Acetylene	<2	µg/L	2µg/L	4/1/2013	swd

Project Identification:	Raytheon, Wayland, MA

Sample ID MW-562

Sampler dj
Sample Date 3/29/13
Sample Time 12:30 PM
Sample Received 3/29/13

Method Modified EPA 5021 A

Compound	Test Value	Units	Detection Limit	Analysis Date	Tech
Dissolved Gasses					
Methane	35530	µg/L	0.3 µg/L	4/1/2013	swd
Ethylene	18.3	µg/L	0.3 µg/L	4/1/2013	swd
Ethane	21.1	µg/L	0.3 µg/L	4/1/2013	swd
Acetylene	<2	µg/L	2µg/L	4/1/2013	swd

---Dissolved Gasses---

Project Identification:	Raytheon, Wayland, MA
Sample ID	MW-563
Sampler	dj
Sample Date	3/29/13
Sample Time	9:35 AM
Sample Received	3/29/13
Method	Modified EPA 5021 A

Compound	**Test Value**	**Units**	**Detection Limit**	**Analysis Date**	**Tech**
Dissolved Gasses					
Methane	1906	µg/L	0.3 µg/L	4/1/2013	swd
Ethylene	10.7	µg/L	0.3 µg/L	4/1/2013	swd
Ethane	<0.3	µg/L	0.3 µg/L	4/1/2013	swd
Acetylene	<2	µg/L	2µg/L	4/1/2013	swd

Project Identification:	Raytheon, Wayland, MA
Sample ID	REW-1
Sampler	dj
Sample Date	3/28/13
Sample Time	12:25 PM
Sample Received	3/29/13
Method	Modified EPA 5021 A

Compound	**Test Value**	**Units**	**Detection Limit**	**Analysis Date**	**Tech**
Dissolved Gasses					
Methane	29995	µg/L	0.3 µg/L	3/29/2013	swd
Ethylene	42.9	µg/L	0.3 µg/L	3/29/2013	swd
Ethane	27.4	µg/L	0.3 µg/L	3/29/2013	swd
Acetylene	<2	µg/L	2µg/L	3/29/2013	swd

---Dissolved Gasses---

Project Identification:	Raytheon, Wayland, MA

Sample ID	REW-4
Sampler	dj
Sample Date	3/28/13
Sample Time	1:25 PM
Sample Received	3/29/13

Method Modified EPA 5021 A

Compound	Test Value	Units	Detection Limit	Analysis Date	Tech
Dissolved Gasses					
Methane	13144	µg/L	0.3 µg/L	3/29/2013	swd
Ethylene	7.8	µg/L	0.3 µg/L	3/29/2013	swd
Ethane	<0.3	µg/L	0.3 µg/L	3/29/2013	swd
Acetylene	<2	µg/L	2µg/L	3/29/2013	swd

Project Identification:	Raytheon, Wayland, MA

Sample ID	REW-5
Sampler	dj
Sample Date	3/28/13
Sample Time	2:00 PM
Sample Received	3/29/13

Method Modified EPA 5021 A

Compound	Test Value	Units	Detection Limit	Analysis Date	Tech
Dissolved Gasses					
Methane	10338	µg/L	0.3 µg/L	3/29/2013	swd
Ethylene	11.3	µg/L	0.3 µg/L	3/29/2013	swd
Ethane	8.3	µg/L	0.3 µg/L	3/29/2013	swd
Acetylene	<2	µg/L	2µg/L	3/29/2013	swd

---Dissolved Gasses---

Project Identification:	Raytheon, Wayland, MA

Sample ID	REW-6
Sampler	dj
Sample Date	3/29/13
Sample Time	7:35 AM
Sample Received	3/29/13
Method	Modified EPA 5021 A

Compound	**Test Value**	**Units**	**Detection Limit**	**Analysis Date**	**Tech**
Dissolved Gasses					
Methane	169	µg/L	0.3 µg/L	4/1/2013	swd
Ethylene	0.8	µg/L	0.3 µg/L	4/1/2013	swd
Ethane	0.4	µg/L	0.3 µg/L	4/1/2013	swd
Acetylene	<2	µg/L	2µg/L	4/1/2013	swd

Project Identification:	Raytheon, Wayland, MA

Sample ID	REW-7
Sampler	dj
Sample Date	4/1/13
Sample Time	3:55 PM
Sample Received	4/1/13
Method	Modified EPA 5021 A

Compound	**Test Value**	**Units**	**Detection Limit**	**Analysis Date**	**Tech**
Dissolved Gasses					
Methane	309	µg/L	0.3 µg/L	3/29/2013	swd
Ethylene	11.4	µg/L	0.3 µg/L	3/29/2013	swd
Ethane	<0.3	µg/L	0.3 µg/L	3/29/2013	swd
Acetylene	<2	µg/L	2µg/L	3/29/2013	swd

---Dissolved Gasses---

Project Identification:	Raytheon, Wayland, MA
Sample ID	REW-8
Sampler	dj
Sample Date	3/28/13
Sample Time	8:55 AM
Sample Received	3/29/13
Method	Modified EPA 5021 A

Compound	**Test Value**	**Units**	**Detection Limit**	**Analysis Date**	**Tech**
Dissolved Gasses					
Methane	455	µg/L	0.3 µg/L	3/29/2013	swd
Ethylene	8.4	µg/L	0.3 µg/L	3/29/2013	swd
Ethane	<0.3	µg/L	0.3 µg/L	3/29/2013	swd
Acetylene	<2	µg/L	2µg/L	3/29/2013	swd

Project Identification:	Raytheon, Wayland, MA
Sample ID	REW-9
Sampler	dj
Sample Date	3/28/13
Sample Time	10:30 AM
Sample Received	3/29/13
Method	Modified EPA 5021 A

Compound	**Test Value**	**Units**	**Detection Limit**	**Analysis Date**	**Tech**
Dissolved Gasses					
Methane	439	µg/L	0.3 µg/L	3/29/2013	swd
Ethylene	0.7	µg/L	0.3 µg/L	3/29/2013	swd
Ethane	<0.3	µg/L	0.3 µg/L	3/29/2013	swd
Acetylene	<2	µg/L	2µg/L	3/29/2013	swd

---Dissolved Gasses---

Project Identification:	Raytheon, Wayland, MA
Sample ID	REW-10
Sampler	dj
Sample Date	3/28/13
Sample Time	9:45 AM
Sample Received	3/29/13
Method	Modified EPA 5021 A

Compound	**Test Value**	**Units**	**Detection Limit**	**Analysis Date**	**Tech**
Dissolved Gasses					
Methane	23.3	µg/L	0.3 µg/L	3/29/2013	swd
Ethylene	<0.3	µg/L	0.3 µg/L	3/29/2013	swd
Ethane	<0.3	µg/L	0.3 µg/L	3/29/2013	swd
Acetylene	<2	µg/L	2µg/L	3/29/2013	swd

Project Identification:	Raytheon, Wayland, MA
Sample ID	REW-11
Sampler	dj
Sample Date	3/29/13
Sample Time	8:05 AM
Sample Received	3/29/13
Method	Modified EPA 5021 A

Compound	**Test Value**	**Units**	**Detection Limit**	**Analysis Date**	**Tech**
Dissolved Gasses					
Methane	82.6	µg/L	0.3 µg/L	4/1/2013	swd
Ethylene	2.8	µg/L	0.3 µg/L	4/1/2013	swd
Ethane	0.3	µg/L	0.3 µg/L	4/1/2013	swd
Acetylene	<2	µg/L	2µg/L	4/1/2013	swd

---Dissolved Gasses---

Project Identification:	Raytheon, Wayland, MA
Sample ID	REW-12
Sampler	dj
Sample Date	3/28/13
Sample Time	11:50 AM
Sample Received	3/29/13
Method	Modified EPA 5021 A

Compound	**Test Value**	**Units**	**Detection Limit**	**Analysis Date**	**Tech**
Dissolved Gasses					
Methane	75.8	µg/L	0.3 µg/L	3/29/2013	swd
Ethylene	2.8	µg/L	0.3 µg/L	3/29/2013	swd
Ethane	<0.3	µg/L	0.3 µg/L	3/29/2013	swd
Acetylene	<2	µg/L	2µg/L	3/29/2013	swd

Project Identification:	Raytheon, Wayland, MA
Sample ID	Trip Blank
Sampler	na
Sample Date	na
Sample Time	na
Sample Received	3/29/13
Method	Modified EPA 5021 A

Compound	**Test Value**	**Units**	**Detection Limit**	**Analysis Date**	**Tech**
Dissolved Gasses					
Methane	<0.3	µg/L	0.3 µg/L	3/29/2013	swd
Ethylene	<0.3	µg/L	0.3 µg/L	3/29/2013	swd
Ethane	<0.3	µg/L	0.3 µg/L	3/29/2013	swd
Acetylene	<2	µg/L	2µg/L	3/29/2013	swd

Bioremediation & Treatability Center

Project Identification:	Raytheon, Wayland, MA

Sample ID	MW-261 S
Sampler	dj
Sample Date	4/1/2013
Sample Time	8:35 AM
Sample Received	4/1/2013

Method Modified EPA 300

Compound	Test Value	Units	Detection Limit	Analysis Date	Tech
Anions					
Chloride	24	mg/L	1 mg/L	3/29/2013	swd
Nitrate	<1	mg/L	1 mg/L	3/29/2013	swd
Sulfate	<1	mg/L	1 mg/L	3/29/2013	swd

Project Identification:	Raytheon, Wayland, MA

Sample ID	MW-265 M
Sampler	dj
Sample Date	3/29/2013
Sample Time	11:30 AM
Sample Received	3/29/2013

Method Modified EPA 300

Compound	Test Value	Units	Detection Limit	Analysis Date	Tech
Anions					
Chloride	23	mg/L	1 mg/L	3/29/2013	swd
Nitrate	<1	mg/L	1 mg/L	3/29/2013	swd
Sulfate	<1	mg/L	1 mg/L	3/29/2013	swd

Project Identification:	Raytheon, Wayland, MA

Sample ID	MW-268 M
Sampler	dj
Sample Date	3/29/2013
Sample Time	8:35 AM
Sample Received	3/29/2013

Method Modified EPA 300

Compound	Test Value	Units	Detection Limit	Analysis Date	Tech
Anions					
Chloride	16	mg/L	1 mg/L	3/29/2013	swd
Nitrate	<1	mg/L	1 mg/L	3/29/2013	swd
Sulfate	33	mg/L	1 mg/L	3/29/2013	swd

---Anions---

Project Identification:	Raytheon, Wayland, MA

Sample ID	MW-552
Sampler	dj
Sample Date	3/29/2013
Sample Time	9:35 AM
Sample Received	3/29/2013

Method Modified EPA 300

Compound	Test Value	Units	Detection Limit	Analysis Date	Tech
Anions					
Chloride	9	mg/L	1 mg/L	3/29/2013	swd
Nitrate	<1	mg/L	1 mg/L	3/29/2013	swd
Sulfate	6	mg/L	1 mg/L	3/29/2013	swd

Project Identification:	Raytheon, Wayland, MA

Sample ID	MW-553
Sampler	dj
Sample Date	3/29/2013
Sample Time	10:40 AM
Sample Received	3/29/2013

Method Modified EPA 300

Compound	Test Value	Units	Detection Limit	Analysis Date	Tech
Anions					
Chloride	12	mg/L	1 mg/L	3/29/2013	swd
Nitrate	<1	mg/L	1 mg/L	3/29/2013	swd
Sulfate	<1	mg/L	1 mg/L	3/29/2013	swd

Project Identification:	Raytheon, Wayland, MA

Sample ID	MW-560
Sampler	dj
Sample Date	3/29/2013
Sample Time	10:55 AM
Sample Received	3/29/2013

Method Modified EPA 300

Compound	Test Value	Units	Detection Limit	Analysis Date	Tech
Anions					
Chloride	15	mg/L	1 mg/L	3/29/2013	swd
Nitrate	<1	mg/L	1 mg/L	3/29/2013	swd
Sulfate	16	mg/L	1 mg/L	3/29/2013	swd

---Anions---

Project Identification:	Raytheon, Wayland, MA

Sample ID	MW-561
Sampler	dj
Sample Date	3/29/2013
Sample Time	10:15 AM
Sample Received	3/29/2013

Method Modified EPA 300

Compound	Test Value	Units	Detection Limit	Analysis Date	Tech
Anions					
Chloride	53	mg/L	1 mg/L	3/29/2013	swd
Nitrate	<1	mg/L	1 mg/L	3/29/2013	swd
Sulfate	24	mg/L	1 mg/L	3/29/2013	swd

Project Identification:	Raytheon, Wayland, MA

Sample ID	MW-562
Sampler	dj
Sample Date	3/29/2013
Sample Time	12:30 PM
Sample Received	3/29/2013

Method Modified EPA 300

Compound	Test Value	Units	Detection Limit	Analysis Date	Tech
Anions					
Chloride	30	mg/L	1 mg/L	3/29/2013	swd
Nitrate	<1	mg/L	1 mg/L	3/29/2013	swd
Sulfate	<1	mg/L	1 mg/L	3/29/2013	swd

Project Identification:	Raytheon, Wayland, MA

Sample ID	MW-563
Sampler	dj
Sample Date	3/29/2013
Sample Time	9:35 AM
Sample Received	3/29/2013

Method Modified EPA 300

Compound	Test Value	Units	Detection Limit	Analysis Date	Tech
Anions					
Chloride	37	mg/L	1 mg/L	3/29/2013	swd
Nitrate	<1	mg/L	1 mg/L	3/29/2013	swd
Sulfate	<1	mg/L	1 mg/L	3/29/2013	swd

Bioremediation & Treatability Center

Project Identification:	Raytheon, Wayland, MA

Sample ID	REW-1
Sampler	dj
Sample Date	3/28/2013
Sample Time	12:25 PM
Sample Received	3/29/2013

Method Modified EPA 300

Compound	Test Value	Units	Detection Limit	Analysis Date	Tech
Anions					
Chloride	26	mg/L	1 mg/L	3/29/2013	swd
Nitrate	<1	mg/L	1 mg/L	3/29/2013	swd
Sulfate	1	mg/L	1 mg/L	3/29/2013	swd

Project Identification:	Raytheon, Wayland, MA

Sample ID	REW-4
Sampler	dj
Sample Date	3/28/2013
Sample Time	1:25 PM
Sample Received	3/29/2013

Method Modified EPA 300

Compound	Test Value	Units	Detection Limit	Analysis Date	Tech
Anions					
Chloride	15	mg/L	1 mg/L	3/29/2013	swd
Nitrate	<1	mg/L	1 mg/L	3/29/2013	swd
Sulfate	12	mg/L	1 mg/L	3/29/2013	swd

Project Identification:	Raytheon, Wayland, MA

Sample ID	REW-5
Sampler	dj
Sample Date	3/28/2013
Sample Time	2:00 PM
Sample Received	3/29/2013

Method Modified EPA 300

Compound	Test Value	Units	Detection Limit	Analysis Date	Tech
Anions					
Chloride	35	mg/L	1 mg/L	3/29/2013	swd
Nitrate	<1	mg/L	1 mg/L	3/29/2013	swd
Sulfate	14	mg/L	1 mg/L	3/29/2013	swd

Project Identification:	Raytheon, Wayland, MA

Sample ID	REW-6
Sampler	dj
Sample Date	3/29/2013
Sample Time	7:35 AM
Sample Received	3/29/2013

Method Modified EPA 300

Compound	**Test Value**	**Units**	**Detection Limit**	**Analysis Date**	**Tech**
Anions					
Chloride	33	mg/L	1 mg/L	3/29/2013	swd
Nitrate	<1	mg/L	1 mg/L	3/29/2013	swd
Sulfate	44	mg/L	1 mg/L	3/29/2013	swd

Project Identification:	Raytheon, Wayland, MA

Sample ID	REW-7
Sampler	dj
Sample Date	4/1/2013
Sample Time	3:55 PM
Sample Received	4/1/2013

Method Modified EPA 300

Compound	**Test Value**	**Units**	**Detection Limit**	**Analysis Date**	**Tech**
Anions					
Chloride	18	mg/L	1 mg/L	3/29/2013	swd
Nitrate	<1	mg/L	1 mg/L	3/29/2013	swd
Sulfate	23	mg/L	1 mg/L	3/29/2013	swd

Project Identification:	Raytheon, Wayland, MA

Sample ID	REW-8
Sampler	dj
Sample Date	3/28/2013
Sample Time	8:55 AM
Sample Received	3/29/2013

Method Modified EPA 300

Compound	**Test Value**	**Units**	**Detection Limit**	**Analysis Date**	**Tech**
Anions					
Chloride	27	mg/L	1 mg/L	3/29/2013	swd
Nitrate	<1	mg/L	1 mg/L	3/29/2013	swd
Sulfate	32	mg/L	1 mg/L	3/29/2013	swd

---Anions---

Project Identification:	Raytheon, Wayland, MA

Sample ID	REW-9
Sampler	dj
Sample Date	3/28/2013
Sample Time	10:30 AM
Sample Received	3/29/2013

Method Modified EPA 300

Compound	Test Value	Units	Detection Limit	Analysis Date	Tech
Anions					
Chloride	38	mg/L	1 mg/L	3/29/2013	swd
Nitrate	<1	mg/L	1 mg/L	3/29/2013	swd
Sulfate	29	mg/L	1 mg/L	3/29/2013	swd

Project Identification:	Raytheon, Wayland, MA

Sample ID	REW-10
Sampler	dj
Sample Date	3/28/2013
Sample Time	9:45 AM
Sample Received	3/29/2013

Method Modified EPA 300

Compound	Test Value	Units	Detection Limit	Analysis Date	Tech
Anions					
Chloride	66	mg/L	1 mg/L	3/29/2013	swd
Nitrate	<1	mg/L	1 mg/L	3/29/2013	swd
Sulfate	37	mg/L	1 mg/L	3/29/2013	swd

Project Identification:	Raytheon, Wayland, MA

Sample ID	REW-11
Sampler	dj
Sample Date	3/29/2013
Sample Time	8:05 AM
Sample Received	3/29/2013

Method Modified EPA 300

Compound	Test Value	Units	Detection Limit	Analysis Date	Tech
Anions					
Chloride	19	mg/L	1 mg/L	3/29/2013	swd
Nitrate	<1	mg/L	1 mg/L	3/29/2013	swd
Sulfate	34	mg/L	1 mg/L	3/29/2013	swd

---Anions---

Project Identification:	Raytheon, Wayland, MA

Sample ID	REW-12
Sampler	dj
Sample Date	3/28/2013
Sample Time	11:50 AM
Sample Received	3/29/2013

Method Modified EPA 300

Compound	Test Value	Units	Detection Limit	Analysis Date	Tech
Anions					
Chloride	28	mg/L	1 mg/L	3/29/2013	swd
Nitrate	<1	mg/L	1 mg/L	3/29/2013	swd
Sulfate	51	mg/L	1 mg/L	3/29/2013	swd

Project Identification:	Raytheon, Wayland, MA

Sample ID	Trip Blank
Sampler	na
Sample Date	na
Sample Time	na
Sample Received	3/29/2013

Method Modified EPA 300

Compound	Test Value	Units	Detection Limit	Analysis Date	Tech
Anions					
Chloride	<1	mg/L	1 mg/L	3/29/2013	swd
Nitrate	<1	mg/L	1 mg/L	3/29/2013	swd
Sulfate	<1	mg/L	1 mg/L	3/29/2013	swd

---Organic Acids---

Project Identification:	Raytheon, Wayland, MA
Sample ID	MW-261 S
Sampler	dj
Sample Date	4/1/2013
Sample Time	8:35 AM
Sample Received	4/1/2013
Method	HPLC / Organic Acid Method

Compound	**Test Value**	**Units**	**Detection Limit**	**Analysis Date**	**Tech**
Organic Acids					
Lactate	<1	mg/L	1 mg/L	3/29/2013	swd
Acetate	175	mg/L	1 mg/L	3/29/2013	swd
Propionate	<1	mg/L	1 mg/L	3/29/2013	swd
Butyrate	6	mg/L	1 mg/L	3/29/2013	swd

Project Identification:	Raytheon, Wayland, MA
Sample ID	MW-265 M
Sampler	dj
Sample Date	3/29/13
Sample Time	11:30 AM
Sample Received	3/29/13
Method	HPLC / Organic Acid Method

Compound	**Test Value**	**Units**	**Detection Limit**	**Analysis Date**	**Tech**
Organic Acids					
Lactate	<1	mg/L	1 mg/L	3/29/2013	swd
Acetate	361	mg/L	1 mg/L	3/29/2013	swd
Propionate	<1	mg/L	1 mg/L	3/29/2013	swd
Butyrate	7	mg/L	1 mg/L	3/29/2013	swd

Project Identification:	Raytheon, Wayland, MA
Sample ID	MW-268 M
Sampler	dj
Sample Date	3/29/13
Sample Time	8:35 AM
Sample Received	3/29/13
Method	HPLC / Organic Acid Method

Compound	**Test Value**	**Units**	**Detection Limit**	**Analysis Date**	**Tech**
Organic Acids					
Lactate	<1	mg/L	1 mg/L	3/29/2013	swd
Acetate	<1	mg/L	1 mg/L	3/29/2013	swd
Propionate	<1	mg/L	1 mg/L	3/29/2013	swd
Butyrate	<1	mg/L	1 mg/L	3/29/2013	swd

---Organic Acids---

Project Identification:	Raytheon, Wayland, MA
Sample ID	MW-552
Sampler	dj
Sample Date	3/29/13
Sample Time	9:35 AM
Sample Received	3/29/13
Method	HPLC / Organic Acid Method

Compound	**Test Value**	**Units**	**Detection Limit**	**Analysis Date**	**Tech**
Organic Acids					
Lactate	<1	mg/L	1 mg/L	3/29/2013	swd
Acetate	51	mg/L	1 mg/L	3/29/2013	swd
Propionate	<1	mg/L	1 mg/L	3/29/2013	swd
Butyrate	<1	mg/L	1 mg/L	3/29/2013	swd

Project Identification:	Raytheon, Wayland, MA
Sample ID	MW-553
Sampler	dj
Sample Date	3/29/13
Sample Time	10:40 AM
Sample Received	3/29/13
Method	HPLC / Organic Acid Method

Compound	**Test Value**	**Units**	**Detection Limit**	**Analysis Date**	**Tech**
Organic Acids					
Lactate	<1	mg/L	1 mg/L	3/29/2013	swd
Acetate	252	mg/L	1 mg/L	3/29/2013	swd
Propionate	<1	mg/L	1 mg/L	3/29/2013	swd
Butyrate	3	mg/L	1 mg/L	3/29/2013	swd

Project Identification:	Raytheon, Wayland, MA
Sample ID	MW-560
Sampler	dj
Sample Date	3/29/13
Sample Time	10:55 AM
Sample Received	3/29/13
Method	HPLC / Organic Acid Method

Compound	**Test Value**	**Units**	**Detection Limit**	**Analysis Date**	**Tech**
Organic Acids					
Lactate	<1	mg/L	1 mg/L	3/29/2013	swd
Acetate	17	mg/L	1 mg/L	3/29/2013	swd
Propionate	<1	mg/L	1 mg/L	3/29/2013	swd
Butyrate	<1	mg/L	1 mg/L	3/29/2013	swd

---Organic Acids---

Project Identification:	Raytheon, Wayland, MA
Sample ID	MW-561
Sampler	dj
Sample Date	3/29/13
Sample Time	10:15 AM
Sample Received	3/29/13
Method	HPLC / Organic Acid Method

Compound	**Test Value**	**Units**	**Detection Limit**	**Analysis Date**	**Tech**
Organic Acids					
Lactate	<1	mg/L	1 mg/L	3/29/2013	swd
Acetate	<1	mg/L	1 mg/L	3/29/2013	swd
Propionate	<1	mg/L	1 mg/L	3/29/2013	swd
Butyrate	2	mg/L	1 mg/L	3/29/2013	swd

Project Identification:	Raytheon, Wayland, MA
Sample ID	MW-562
Sampler	dj
Sample Date	3/29/13
Sample Time	12:30 PM
Sample Received	3/29/13
Method	HPLC / Organic Acid Method

Compound	**Test Value**	**Units**	**Detection Limit**	**Analysis Date**	**Tech**
Organic Acids					
Lactate	<1	mg/L	1 mg/L	3/29/2013	swd
Acetate	351	mg/L	1 mg/L	3/29/2013	swd
Propionate	<1	mg/L	1 mg/L	3/29/2013	swd
Butyrate	5	mg/L	1 mg/L	3/29/2013	swd

Project Identification:	Raytheon, Wayland, MA
Sample ID	MW-563
Sampler	dj
Sample Date	3/29/13
Sample Time	9:35:00 AM
Sample Received	3/29/13
Method	HPLC / Organic Acid Method

Compound	**Test Value**	**Units**	**Detection Limit**	**Analysis Date**	**Tech**
Organic Acids					
Lactate	<1	mg/L	1 mg/L	3/29/2013	swd
Acetate	290	mg/L	1 mg/L	3/29/2013	swd
Propionate	<1	mg/L	1 mg/L	3/29/2013	swd
Butyrate	6	mg/L	1 mg/L	3/29/2013	swd

---Organic Acids---

Project Identification:	Raytheon, Wayland, MA
Sample ID	REW-1
Sampler	dj
Sample Date	3/28/13
Sample Time	12:25 PM
Sample Received	3/29/13

Method HPLC / Organic Acid Method

Compound	**Test Value**	**Units**	**Detection Limit**	**Analysis Date**	**Tech**
Organic Acids					
Lactate	<1	mg/L	1 mg/L	3/29/2013	swd
Acetate	506	mg/L	1 mg/L	3/29/2013	swd
Propionate	5	mg/L	1 mg/L	3/29/2013	swd
Butyrate	21	mg/L	1 mg/L	3/29/2013	swd

Project Identification:	Raytheon, Wayland, MA
Sample ID	REW-4
Sampler	dj
Sample Date	3/28/13
Sample Time	1:25 PM
Sample Received	3/29/13

Method HPLC / Organic Acid Method

Compound	**Test Value**	**Units**	**Detection Limit**	**Analysis Date**	**Tech**
Organic Acids					
Lactate	<1	mg/L	1 mg/L	3/29/2013	swd
Acetate	203	mg/L	1 mg/L	3/29/2013	swd
Propionate	4	mg/L	1 mg/L	3/29/2013	swd
Butyrate	6	mg/L	1 mg/L	3/29/2013	swd

Project Identification:	Raytheon, Wayland, MA
Sample ID	REW-5
Sampler	dj
Sample Date	3/28/13
Sample Time	2:00 PM
Sample Received	3/29/13

Method HPLC / Organic Acid Method

Compound	**Test Value**	**Units**	**Detection Limit**	**Analysis Date**	**Tech**
Organic Acids					
Lactate	<1	mg/L	1 mg/L	3/29/2013	swd
Acetate	138	mg/L	1 mg/L	3/29/2013	swd
Propionate	<1	mg/L	1 mg/L	3/29/2013	swd
Butyrate	4	mg/L	1 mg/L	3/29/2013	swd

Bioremediation & Treatability Center

Project Identification:	Raytheon, Wayland, MA
Sample ID	REW-6
Sampler	dj
Sample Date	3/29/13
Sample Time	7:35 AM
Sample Received	3/29/13

Method HPLC / Organic Acid Method

Compound	**Test Value**	**Units**	**Detection Limit**	**Analysis Date**	**Tech**
Organic Acids					
Lactate	<1	mg/L	1 mg/L	3/29/2013	swd
Acetate	<1	mg/L	1 mg/L	3/29/2013	swd
Propionate	<1	mg/L	1 mg/L	3/29/2013	swd
Butyrate	3	mg/L	1 mg/L	3/29/2013	swd

Project Identification:	Raytheon, Wayland, MA
Sample ID	REW-7
Sampler	dj
Sample Date	4/1/13
Sample Time	3:55 PM
Sample Received	4/1/13

Method HPLC / Organic Acid Method

Compound	**Test Value**	**Units**	**Detection Limit**	**Analysis Date**	**Tech**
Organic Acids					
Lactate	<1	mg/L	1 mg/L	3/29/2013	swd
Acetate	5	mg/L	1 mg/L	3/29/2013	swd
Propionate	<1	mg/L	1 mg/L	3/29/2013	swd
Butyrate	<1	mg/L	1 mg/L	3/29/2013	swd

Project Identification:	Raytheon, Wayland, MA
Sample ID	REW-8
Sampler	dj
Sample Date	3/28/13
Sample Time	8:55 AM
Sample Received	3/29/13

Method HPLC / Organic Acid Method

Compound	**Test Value**	**Units**	**Detection Limit**	**Analysis Date**	**Tech**
Organic Acids					
Lactate	<1	mg/L	1 mg/L	3/29/2013	swd
Acetate	29	mg/L	1 mg/L	3/29/2013	swd
Propionate	<1	mg/L	1 mg/L	3/29/2013	swd
Butyrate	3	mg/L	1 mg/L	3/29/2013	swd

---Organic Acids---

Project Identification:	Raytheon, Wayland, MA
Sample ID	REW-9
Sampler	dj
Sample Date	3/28/13
Sample Time	10:30 AM
Sample Received	3/29/13

Method HPLC / Organic Acid Method

Compound	Test Value	Units	Detection Limit	Analysis Date	Tech
Organic Acids					
Lactate	<1	mg/L	1 mg/L	3/29/2013	swd
Acetate	50	mg/L	1 mg/L	3/29/2013	swd
Propionate	<1	mg/L	1 mg/L	3/29/2013	swd
Butyrate	<1	mg/L	1 mg/L	3/29/2013	swd

Project Identification:	Raytheon, Wayland, MA
Sample ID	REW-10
Sampler	dj
Sample Date	3/28/13
Sample Time	9:45 AM
Sample Received	3/29/13

Method HPLC / Organic Acid Method

Compound	Test Value	Units	Detection Limit	Analysis Date	Tech
Organic Acids					
Lactate	<1	mg/L	1 mg/L	3/29/2013	swd
Acetate	<1	mg/L	1 mg/L	3/29/2013	swd
Propionate	<1	mg/L	1 mg/L	3/29/2013	swd
Butyrate	<1	mg/L	1 mg/L	3/29/2013	swd

Project Identification:	Raytheon, Wayland, MA
Sample ID	REW-11
Sampler	dj
Sample Date	3/29/13
Sample Time	8:05 AM
Sample Received	3/29/13

Method HPLC / Organic Acid Method

Compound	Test Value	Units	Detection Limit	Analysis Date	Tech
Organic Acids					
Lactate	<1	mg/L	1 mg/L	3/29/2013	swd
Acetate	5	mg/L	1 mg/L	3/29/2013	swd
Propionate	<1	mg/L	1 mg/L	3/29/2013	swd
Butyrate	3	mg/L	1 mg/L	3/29/2013	swd

---Organic Acids---

Project Identification:	Raytheon, Wayland, MA
Sample ID	REW-12
Sampler	dj
Sample Date	3/28/13
Sample Time	11:50 AM
Sample Received	3/29/13

Method HPLC / Organic Acid Method

Compound	Test Value	Units	Detection Limit	Analysis Date	Tech
Organic Acids					
Lactate	<1	mg/L	1 mg/L	3/29/2013	swd
Acetate	5	mg/L	1 mg/L	3/29/2013	swd
Propionate	<1	mg/L	1 mg/L	3/29/2013	swd
Butyrate	<1	mg/L	1 mg/L	3/29/2013	swd

Project Identification:	Raytheon, Wayland, MA
Sample ID	Trip Blank
Sampler	na
Sample Date	na
Sample Time	na
Sample Received	3/29/13

Method HPLC / Organic Acid Method

Compound	Test Value	Units	Detection Limit	Analysis Date	Tech
Organic Acids					
Lactate	<1	mg/L	1 mg/L	3/29/2013	swd
Acetate	<1	mg/L	1 mg/L	3/29/2013	swd
Propionate	<1	mg/L	1 mg/L	3/29/2013	swd
Butyrate	<1	mg/L	1 mg/L	3/29/2013	swd

---Chemistries---

Project Identification:	Raytheon, Wayland, MA

Sample ID	MW-261 S
Sampler	dj
Sample Date	4/1/2013
Sample Time	8:35 AM
Sample Received	4/1/2013

Chemical Tests	Test Value	Units	Method	Detection Limit	Analysis Date	Tech
Alkalinity	400	mg/L	HACH 8203	5 mg/L	4/1/2013	rdr
Manganese	na	mg/L	HACH 8034	0.12 mg/L	na	na
NH_3-N	0.19	mg/L	HACH 8155	0.02 mg/L	4/1/2013	rdr
PO_4	1.54	mg/L	HACH 8048	0.05 mg/L	4/1/2013	rdr
Sulfide	na	mg/L	HACH 8131	0.01 mg/L	na	na
Total Iron	74.5	mg/L	HACH 8008	0.03 mg/L	4/2/2013	rdr
COD	na	mg/L	HACH 8000	<2 mg/L	na	na
TOC	110	mg/L	EPA 9060A	<0.3 mg/L	4/2/2013	swd
pH	6.78	pH units	pH probe	<0.01 pH units	4/1/2013	rdr

Project Identification:	Raytheon, Wayland, MA

Sample ID	MW-265 M
Sampler	dj
Sample Date	3/29/2013
Sample Time	11:30 AM
Sample Received	3/29/2013

Chemical Tests	Test Value	Units	Method	Detection Limit	Analysis Date	Tech
Alkalinity	610	mg/L	HACH 8203	5 mg/L	3/29/2013	rdr
Manganese	na	mg/L	HACH 8034	0.12 mg/L	na	na
NH_3-N	0.14	mg/L	HACH 8155	0.02 mg/L	4/1/2013	rdr
PO_4	0.80	mg/L	HACH 8048	0.05 mg/L	4/1/2013	rdr
Sulfide	na	mg/L	HACH 8131	0.01 mg/L	na	na
Total Iron	55.6	mg/L	HACH 8008	0.03 mg/L	4/2/2013	rdr
COD	na	mg/L	HACH 8000	<2 mg/L	na	na
TOC	225	mg/L	EPA 9060A	<0.3 mg/L	4/1/2013	swd
pH	7.03	pH units	pH probe	<0.01 pH units	3/29/2013	rdr

---Chemistries---

Bioremediation & Treatability Center

Project Identification: Raytheon, Wayland, MA

Sample ID MW-268 M

Sampler dj
Sample Date 3/29/2013
Sample Time 8:35 AM
Sample Received 3/29/2013

Chemical Tests	Test Value	Units	Method	Detection Limit	Analysis Date	Tech
Alkalinity	120	mg/L	HACH 8203	5 mg/L	3/29/2013	rdr
Manganese	na	mg/L	HACH 8034	0.12 mg/L	na	na
NH_3-N	0.05	mg/L	HACH 8155	0.02 mg/L	4/1/2013	rdr
PO_4	0.29	mg/L	HACH 8048	0.05 mg/L	4/1/2013	rdr
Sulfide	na	mg/L	HACH 8131	0.01 mg/L	na	na
Total Iron	20.8	mg/L	HACH 8008	0.03 mg/L	4/2/2013	rdr
COD	na	mg/L	HACH 8000	<2 mg/L	na	na
TOC	1.8	mg/L	EPA 9060A	<0.3 mg/L	4/1/2013	swd
pH	6.94	pH units	pH probe	<0.01 pH units	3/29/2013	rdr

Project Identification: Raytheon, Wayland, MA

Sample ID MW-552

Sampler dj
Sample Date 3/29/2013
Sample Time 9:35 AM
Sample Received 3/29/2013

Chemical Tests	Test Value	Units	Method	Detection Limit	Analysis Date	Tech
Alkalinity	300	mg/L	HACH 8203	5 mg/L	3/29/2013	rdr
Manganese	na	mg/L	HACH 8034	0.12 mg/L	na	na
NH_3-N	0.15	mg/L	HACH 8155	0.02 mg/L	4/1/2013	rdr
PO_4	0.23	mg/L	HACH 8048	0.05 mg/L	4/1/2013	rdr
Sulfide	na	mg/L	HACH 8131	0.01 mg/L	na	na
Total Iron	20.7	mg/L	HACH 8008	0.03 mg/L	4/2/2013	rdr
COD	na	mg/L	HACH 8000	<2 mg/L	na	na
TOC	27.6	mg/L	EPA 9060A	<0.3 mg/L	4/1/2013	swd
pH	6.82	pH units	pH probe	<0.01 pH units	3/29/2013	rdr

---Chemistries---

Project Identification:	Raytheon, Wayland, MA

Sample ID	MW-553
Sampler	dj
Sample Date	3/29/2013
Sample Time	10:40 AM
Sample Received	3/29/2013

Chemical Tests	Test Value	Units	Method	Detection Limit	Analysis Date	Tech
Alkalinity	550	mg/L	HACH 8203	5 mg/L	3/29/2013	rdr
Manganese	na	mg/L	HACH 8034	0.12 mg/L	na	na
NH_3-N	0.04	mg/L	HACH 8155	0.02 mg/L	4/1/2013	rdr
PO_4	0.56	mg/L	HACH 8048	0.05 mg/L	4/1/2013	rdr
Sulfide	na	mg/L	HACH 8131	0.01 mg/L	na	na
Total Iron	124	mg/L	HACH 8008	0.03 mg/L	4/2/2013	rdr
COD	na	mg/L	HACH 8000	<2 mg/L	na	na
TOC	300	mg/L	EPA 9060A	<0.3 mg/L	4/1/2013	swd
pH	6.93	pH units	pH probe	<0.01 pH units	3/29/2013	rdr

Project Identification:	Raytheon, Wayland, MA

Sample ID	MW-560
Sampler	dj
Sample Date	3/29/2013
Sample Time	10:55 AM
Sample Received	3/29/2013

Chemical Tests	Test Value	Units	Method	Detection Limit	Analysis Date	Tech
Alkalinity	100	mg/L	HACH 8203	5 mg/L	3/29/2013	rdr
Manganese	na	mg/L	HACH 8034	0.12 mg/L	na	na
NH_3-N	0.69	mg/L	HACH 8155	0.02 mg/L	4/1/2013	rdr
PO_4	<0.05	mg/L	HACH 8048	0.05 mg/L	4/1/2013	rdr
Sulfide	na	mg/L	HACH 8131	0.01 mg/L	na	na
Total Iron	0.16	mg/L	HACH 8008	0.03 mg/L	4/2/2013	rdr
COD	na	mg/L	HACH 8000	<2 mg/L	na	na
TOC	52.6	mg/L	EPA 9060A	<0.3 mg/L	4/1/2013	swd
pH	10.74	pH units	pH probe	<0.01 pH units	3/29/2013	rdr

---Chemistries---

Project Identification:	Raytheon, Wayland, MA

Sample ID	MW-561
Sampler	dj
Sample Date	3/29/2013
Sample Time	10:15 AM
Sample Received	3/29/2013

Chemical Tests	**Test Value**	**Units**	**Method**	**Detection Limit**	**Analysis Date**	**Tech**
Alkalinity	160	mg/L	HACH 8203	5 mg/L	3/29/2013	rdr
Manganese	na	mg/L	HACH 8034	0.12 mg/L	na	na
NH_3-N	0.03	mg/L	HACH 8155	0.02 mg/L	4/1/2013	rdr
PO_4	<0.05	mg/L	HACH 8048	0.05 mg/L	4/1/2013	rdr
Sulfide	na	mg/L	HACH 8131	0.01 mg/L	na	na
Total Iron	11.9	mg/L	HACH 8008	0.03 mg/L	4/2/2013	rdr
COD	na	mg/L	HACH 8000	<2 mg/L	na	na
TOC	2.7	mg/L	EPA 9060A	<0.3 mg/L	4/1/2013	swd
pH	7.22	pH units	pH probe	<0.01 pH units	3/29/2013	rdr

Project Identification:	Raytheon, Wayland, MA

Sample ID	MW-562
Sampler	dj
Sample Date	3/29/2013
Sample Time	12:30 PM
Sample Received	3/29/2013

Chemical Tests	**Test Value**	**Units**	**Method**	**Detection Limit**	**Analysis Date**	**Tech**
Alkalinity	580	mg/L	HACH 8203	5 mg/L	3/29/2013	rdr
Manganese	na	mg/L	HACH 8034	0.12 mg/L	na	na
NH_3-N	2.00	mg/L	HACH 8155	0.02 mg/L	4/1/2013	rdr
PO_4	1.33	mg/L	HACH 8048	0.05 mg/L	4/1/2013	rdr
Sulfide	na	mg/L	HACH 8131	0.01 mg/L	na	na
Total Iron	127	mg/L	HACH 8008	0.03 mg/L	4/2/2013	rdr
COD	na	mg/L	HACH 8000	<2 mg/L	na	na
TOC	175	mg/L	EPA 9060A	<0.3 mg/L	4/1/2013	swd
pH	6.86	pH units	pH probe	<0.01 pH units	3/29/2013	rdr

---Chemistries---

Project Identification:	Raytheon, Wayland, MA

Sample ID	MW-563
Sampler	dj
Sample Date	3/29/2013
Sample Time	9:35 AM
Sample Received	3/29/2013

Chemical Tests	Test Value	Units	Method	Detection Limit	Analysis Date	Tech
Alkalinity	280	mg/L	HACH 8203	5 mg/L	3/29/2013	rdr
Manganese	na	mg/L	HACH 8034	0.12 mg/L	na	na
NH_3-N	0.11	mg/L	HACH 8155	0.02 mg/L	4/1/2013	rdr
PO_4	0.29	mg/L	HACH 8048	0.05 mg/L	4/1/2013	rdr
Sulfide	na	mg/L	HACH 8131	0.01 mg/L	na	na
Total Iron	65.5	mg/L	HACH 8008	0.03 mg/L	4/2/2013	rdr
COD	na	mg/L	HACH 8000	<2 mg/L	na	na
TOC	296	mg/L	EPA 9060A	<0.3 mg/L	4/1/2013	swd
pH	6.61	pH units	pH probe	<0.01 pH units	3/29/2013	rdr

Project Identification:	Raytheon, Wayland, MA

Sample ID	REW-1
Sampler	dj
Sample Date	3/28/2013
Sample Time	12:25 PM
Sample Received	3/29/2013

Chemical Tests	Test Value	Units	Method	Detection Limit	Analysis Date	Tech
Alkalinity	780	mg/L	HACH 8203	5 mg/L	3/29/2013	rdr
Manganese	na	mg/L	HACH 8034	0.12 mg/L	na	na
NH_3-N	3.00	mg/L	HACH 8155	0.02 mg/L	3/29/2013	rdr
PO_4	1.41	mg/L	HACH 8048	0.05 mg/L	3/29/2013	rdr
Sulfide	na	mg/L	HACH 8131	0.01 mg/L	na	na
Total Iron	112	mg/L	HACH 8008	0.03 mg/L	4/2/2013	rdr
COD	na	mg/L	HACH 8000	<2 mg/L	na	na
TOC	461	mg/L	EPA 9060A	<0.3 mg/L	4/1/2013	swd
pH	6.68	pH units	pH probe	<0.01 pH units	3/29/2013	rdr

---Chemistries---

Project Identification:	Raytheon, Wayland, MA

Sample ID REW-4

Sampler dj
Sample Date 3/28/2013
Sample Time 1:25 PM
Sample Received 3/29/2013

Chemical Tests	Test Value	Units	Method	Detection Limit	Analysis Date	Tech
Alkalinity	280	mg/L	HACH 8203	5 mg/L	3/29/2013	rdr
Manganese	na	mg/L	HACH 8034	0.12 mg/L	na	na
NH_3-N	0.41	mg/L	HACH 8155	0.02 mg/L	3/29/2013	rdr
PO_4	0.12	mg/L	HACH 8048	0.05 mg/L	3/29/2013	rdr
Sulfide	na	mg/L	HACH 8131	0.01 mg/L	na	na
Total Iron	26.7	mg/L	HACH 8008	0.03 mg/L	4/2/2013	rdr
COD	na	mg/L	HACH 8000	<2 mg/L	na	na
TOC	260	mg/L	EPA 9060A	<0.3 mg/L	4/1/2013	swd
pH	6.72	pH units	pH probe	<0.01 pH units	3/29/2013	rdr

Project Identification:	Raytheon, Wayland, MA

Sample ID REW-5

Sampler dj
Sample Date 3/28/2013
Sample Time 2:00 PM
Sample Received 3/29/2013

Chemical Tests	Test Value	Units	Method	Detection Limit	Analysis Date	Tech
Alkalinity	300	mg/L	HACH 8203	5 mg/L	3/29/2013	rdr
Manganese	na	mg/L	HACH 8034	0.12 mg/L	na	na
NH_3-N	0.87	mg/L	HACH 8155	0.02 mg/L	3/29/2013	rdr
PO_4	0.52	mg/L	HACH 8048	0.05 mg/L	3/29/2013	rdr
Sulfide	na	mg/L	HACH 8131	0.01 mg/L	na	na
Total Iron	30.7	mg/L	HACH 8008	0.03 mg/L	4/2/2013	rdr
COD	na	mg/L	HACH 8000	<2 mg/L	na	na
TOC	113	mg/L	EPA 9060A	<0.3 mg/L	4/1/2013	swd
pH	6.63	pH units	pH probe	<0.01 pH units	3/29/2013	rdr

---Chemistries---

Project Identification:	Raytheon, Wayland, MA

Sample ID	REW-6
Sampler	dj
Sample Date	3/29/2013
Sample Time	7:35 AM
Sample Received	3/29/2013

Chemical Tests	Test Value	Units	Method	Detection Limit	Analysis Date	Tech
Alkalinity	120	mg/L	HACH 8203	5 mg/L	3/29/2013	rdr
Manganese	na	mg/L	HACH 8034	0.12 mg/L	na	na
NH_3-N	0.03	mg/L	HACH 8155	0.02 mg/L	4/1/2013	rdr
PO_4	0.38	mg/L	HACH 8048	0.05 mg/L	4/1/2013	rdr
Sulfide	na	mg/L	HACH 8131	0.01 mg/L	na	na
Total Iron	16.2	mg/L	HACH 8008	0.03 mg/L	4/2/2013	rdr
COD	na	mg/L	HACH 8000	<2 mg/L	na	na
TOC	2.6	mg/L	EPA 9060A	<0.3 mg/L	4/1/2013	swd
pH	6.82	pH units	pH probe	<0.01 pH units	3/29/2013	rdr

Project Identification:	Raytheon, Wayland, MA

Sample ID	REW-7
Sampler	dj
Sample Date	4/1/2013
Sample Time	3:55 PM
Sample Received	4/1/2013

Chemical Tests	Test Value	Units	Method	Detection Limit	Analysis Date	Tech
Alkalinity	120	mg/L	HACH 8203	5 mg/L	4/1/2013	rdr
Manganese	na	mg/L	HACH 8034	0.12 mg/L	na	na
NH_3-N	0.07	mg/L	HACH 8155	0.02 mg/L	4/1/2013	rdr
PO_4	0.09	mg/L	HACH 8048	0.05 mg/L	4/1/2013	rdr
Sulfide	na	mg/L	HACH 8131	0.01 mg/L	na	na
Total Iron	17.2	mg/L	HACH 8008	0.03 mg/L	4/2/2013	rdr
COD	na	mg/L	HACH 8000	<2 mg/L	na	na
TOC	4.7	mg/L	EPA 9060A	<0.3 mg/L	4/2/2013	swd
pH	6.64	pH units	pH probe	<0.01 pH units	4/1/2013	rdr

---Chemistries---

Project Identification:	Raytheon, Wayland, MA

Sample ID	REW-8
Sampler	dj
Sample Date	3/28/2013
Sample Time	8:55 AM
Sample Received	3/29/2013

Chemical Tests	Test Value	Units	Method	Detection Limit	Analysis Date	Tech
Alkalinity	120	mg/L	HACH 8203	5 mg/L	3/29/2013	rdr
Manganese	na	mg/L	HACH 8034	0.12 mg/L	na	na
NH_3-N	0.06	mg/L	HACH 8155	0.02 mg/L	3/29/2013	rdr
PO_4	0.19	mg/L	HACH 8048	0.05 mg/L	3/29/2013	rdr
Sulfide	na	mg/L	HACH 8131	0.01 mg/L	na	na
Total Iron	16.0	mg/L	HACH 8008	0.03 mg/L	4/2/2013	rdr
COD	na	mg/L	HACH 8000	<2 mg/L	na	na
TOC	26.5	mg/L	EPA 9060A	<0.3 mg/L	4/1/2013	swd
pH	6.65	pH units	pH probe	<0.01 pH units	3/29/2013	rdr

Project Identification:	Raytheon, Wayland, MA

Sample ID	REW-9
Sampler	dj
Sample Date	3/28/2013
Sample Time	10:30 AM
Sample Received	3/29/2013

Chemical Tests	Test Value	Units	Method	Detection Limit	Analysis Date	Tech
Alkalinity	160	mg/L	HACH 8203	5 mg/L	3/29/2013	rdr
Manganese	na	mg/L	HACH 8034	0.12 mg/L	na	na
NH_3-N	0.04	mg/L	HACH 8155	0.02 mg/L	3/29/2013	rdr
PO_4	0.20	mg/L	HACH 8048	0.05 mg/L	3/29/2013	rdr
Sulfide	na	mg/L	HACH 8131	0.01 mg/L	na	na
Total Iron	12.2	mg/L	HACH 8008	0.03 mg/L	4/2/2013	rdr
COD	na	mg/L	HACH 8000	<2 mg/L	na	na
TOC	48.2	mg/L	EPA 9060A	<0.3 mg/L	4/1/2013	swd
pH	6.59	pH units	pH probe	<0.01 pH units	3/29/2013	rdr

---Chemistries---

Project Identification:	Raytheon, Wayland, MA

Sample ID	REW-10
Sampler	dj
Sample Date	3/28/2013
Sample Time	9:45 AM
Sample Received	3/29/2013

Chemical Tests	Test Value	Units	Method	Detection Limit	Analysis Date	Tech
Alkalinity	100	mg/L	HACH 8203	5 mg/L	3/29/2013	rdr
Manganese	na	mg/L	HACH 8034	0.12 mg/L	na	na
NH_3-N	0.05	mg/L	HACH 8155	0.02 mg/L	3/29/2013	rdr
PO_4	0.05	mg/L	HACH 8048	0.05 mg/L	3/29/2013	rdr
Sulfide	na	mg/L	HACH 8131	0.01 mg/L	na	na
Total Iron	1.36	mg/L	HACH 8008	0.03 mg/L	4/2/2013	rdr
COD	na	mg/L	HACH 8000	<2 mg/L	na	na
TOC	2.5	mg/L	EPA 9060A	<0.3 mg/L	4/1/2013	swd
pH	7.14	pH units	pH probe	<0.01 pH units	3/29/2013	rdr

Project Identification:	Raytheon, Wayland, MA

Sample ID	REW-11
Sampler	dj
Sample Date	3/29/2013
Sample Time	8:05 AM
Sample Received	3/29/2013

Chemical Tests	Test Value	Units	Method	Detection Limit	Analysis Date	Tech
Alkalinity	120	mg/L	HACH 8203	5 mg/L	3/29/2013	rdr
Manganese	na	mg/L	HACH 8034	0.12 mg/L	na	na
NH_3-N	0.15	mg/L	HACH 8155	0.02 mg/L	4/1/2013	rdr
PO_4	0.29	mg/L	HACH 8048	0.05 mg/L	4/1/2013	rdr
Sulfide	na	mg/L	HACH 8131	0.01 mg/L	na	na
Total Iron	17.9	mg/L	HACH 8008	0.03 mg/L	4/2/2013	rdr
COD	na	mg/L	HACH 8000	<2 mg/L	na	na
TOC	3.1	mg/L	EPA 9060A	<0.3 mg/L	4/1/2013	swd
pH	6.83	pH units	pH probe	<0.01 pH units	3/29/2013	rdr

---Chemistries---

Project Identification:	Raytheon, Wayland, MA
Sample ID	REW-12
Sampler	dj
Sample Date	3/28/2013
Sample Time	11:50 AM
Sample Received	3/29/2013

Chemical Tests	**Test Value**	**Units**	**Method**	**Detection Limit**	**Analysis Date**	**Tech**
Alkalinity	100	mg/L	HACH 8203	5 mg/L	3/29/2013	rdr
Manganese	na	mg/L	HACH 8034	0.12 mg/L	na	na
NH_3-N	0.07	mg/L	HACH 8155	0.02 mg/L	3/29/2013	rdr
PO_4	0.22	mg/L	HACH 8048	0.05 mg/L	3/29/2013	rdr
Sulfide	na	mg/L	HACH 8131	0.01 mg/L	na	na
Total Iron	20.0	mg/L	HACH 8008	0.03 mg/L	4/2/2013	rdr
COD	na	mg/L	HACH 8000	<2 mg/L	na	na
TOC	7.9	mg/L	EPA 9060A	<0.3 mg/L	4/1/2013	swd
pH	6.72	pH units	pH probe	<0.01 pH units	3/29/2013	rdr

Project Identification:	Raytheon, Wayland, MA
Sample ID	Trip Blank
Sampler	na
Sample Date	na
Sample Time	na
Sample Received	3/29/2013

Chemical Tests	**Test Value**	**Units**	**Method**	**Detection Limit**	**Analysis Date**	**Tech**
Alkalinity	10	mg/L	HACH 8203	5 mg/L	3/29/2013	rdr
Manganese	na	mg/L	HACH 8034	0.12 mg/L	na	na
NH_3-N	<0.02	mg/L	HACH 8155	0.02 mg/L	4/1/2013	rdr
PO_4	<0.05	mg/L	HACH 8048	0.05 mg/L	4/1/2013	rdr
Sulfide	na	mg/L	HACH 8131	0.01 mg/L	na	na
Total Iron	<0.03	mg/L	HACH 8008	0.03 mg/L	4/2/2013	rdr
COD	na	mg/L	HACH 8000	<2 mg/L	na	na
TOC	<0.3	mg/L	EPA 9060A	<0.3 mg/L	4/1/2013	swd
pH	7.68	pH units	pH probe	<0.01 pH units	3/29/2013	rdr

Project	Raytheon, Wayland, MA						
Date Received		4/1/13	3/29/13	3/29/13	3/29/13	3/29/13	3/29/13
Sample ID		MW-261 S	MW-265 M	MW-268 M	MW-552	MW-553	MW-560
Date Sampled		4/1/13	3/29/13	3/29/13	3/29/13	3/29/13	3/29/13

Dissolved Gasses							
Date Analyzed		4/1/13	3/29/13	4/1/13	4/1/13	4/1/13	4/1/13
Sample ID	Units	MW-261 S	MW-265 M	MW-268 M	MW-552	MW-553	MW-560
Methane	µg/L	21890	36553	29.0	12420	24936	167
Ethylene	µg/L	28.2	20.3	4.3	20.4	18.2	1.7
Ethane	µg/L	<0.3	<0.3	5.9	<0.3	<0.3	<0.3
Acetylene	µg/L	<2	<2	<2	<2	<2	<2

Anions							
Date Analyzed		3/29/13	3/29/13	3/29/13	3/29/13	3/29/13	3/29/13
Sample ID	Units	MW-261 S	MW-265 M	MW-268 M	MW-552	MW-553	MW-560
Chloride	mg/L	24	23	16	9	12	15
Nitrate	mg/L	<1	<1	<1	<1	<1	<1
Sulfate	mg/L	<1	<1	33	6	<1	16
Organic Acids							
Date Analyzed		3/29/13	3/29/13	3/29/13	3/29/13	3/29/13	3/29/13
Lactate	mg/L	<1	<1	<1	<1	<1	<1
Acetate	mg/L	175	361	<1	51	252	17
Propionate	mg/L	<1	<1	<1	<1	<1	<1
Butyrate	mg/L	6	7	<1	<1	3	<1

Chemistries							
Date Analyzed	3/29/13-4/2/13						
Sample ID	Units	MW-261 S	MW-265 M	MW-268 M	MW-552	MW-553	MW-560
Alkalinity	mg/L	400	610	120	300	550	100
Manganese	mg/L	na	na	na	na	na	na
NH_3-N	mg/L	0.19	0.14	0.05	0.15	0.04	0.69
PO_4	mg/L	1.54	0.80	0.29	0.23	0.56	<0.05
Sulfide	mg/L	na	na	na	na	na	na
Total Iron	mg/L	74.5	55.6	20.8	20.7	124	0.16
COD	mg/L	na	na	na	na	na	na
TOC	mg/L	110	225	1.8	27.6	300	52.6
pH	pH units	6.78	7.03	6.94	6.82	6.93	10.74

H2/CO2 by TCD analysis							
Date Analyzed		na	na	na	na	na	na
Sample ID	Units	MW-261 S	MW-265 M	MW-268 M	MW-552	MW-553	MW-560
H2	µM	na	na	na	na	na	na
CO2	mg/L	na	na	na	na	na	na

---Table-Summary of Analytical Report---

Project	Raytheon, Wayland, MA						
Date Received		3/29/13	3/29/13	3/29/13	3/29/13	3/29/13	3/29/13
Sample ID		MW-561	MW-562	MW-563	REW-1	REW-4	REW-5
Date Sampled		3/29/13	3/29/13	3/29/13	3/28/13	3/28/13	3/28/13
Dissolved Gasses							
Date Analyzed		4/1/13	4/1/13	4/1/13	3/29/13	3/29/13	3/29/13
Sample ID	Units	MW-561	MW-562	MW-563	REW-1	REW-4	REW-5
Methane	µg/L	1544	35530	1906	29995	13144	10338
Ethylene	µg/L	96.1	18.3	10.7	42.9	7.8	11.3
Ethane	µg/L	<0.3	21.1	<0.3	27.4	<0.3	8.3
Acetylene	µg/L	<2	<2	<2	<2	<2	<2
Anions							
Date Analyzed		3/29/13	3/29/13	3/29/13	3/29/13	3/29/13	3/29/13
Sample ID	Units	MW-561	MW-562	MW-563	REW-1	REW-4	REW-5
Chloride	mg/L	53	30	37	26	15	35
Nitrate	mg/L	<1	<1	<1	<1	<1	<1
Sulfate	mg/L	24	<1	<1	1	12	14
Organic Acids							
Date Analyzed		3/29/13	3/29/13	3/29/13	3/29/13	3/29/13	3/29/13
Lactate	mg/L	<1	<1	<1	<1	<1	<1
Acetate	mg/L	<1	351	290	506	203	138
Propionate	mg/L	<1	<1	<1	5	4	<1
Butyrate	mg/L	2	5	6	21	6	4
Chemistries							
Date Analyzed	3/29/13-4/2/13						
Sample ID	Units	MW-561	MW-562	MW-563	REW-1	REW-4	REW-5
Alkalinity	mg/L	160	580	280	780	280	300
Manganese	mg/L	na	na	na	na	na	na
NH_3-N	mg/L	0.03	2.00	0.11	3.00	0.41	0.87
PO_4	mg/L	<0.05	1.33	0.29	1.41	0.12	0.52
Sulfide	mg/L	na	na	na	na	na	na
Total Iron	mg/L	11.9	127	65.5	112	26.7	30.7
COD	mg/L	na	na	na	na	na	na
TOC	mg/L	2.7	175	296	461	260	113
pH	pH units	7.22	6.86	6.61	6.68	6.72	6.63
H2/CO2 by TCD analysis							
Date Analyzed		na	na	na	na	na	na
Sample ID	Units	MW-561	MW-562	MW-563	REW-1	REW-4	REW-5
H_2	µM	na	na	na	na	na	na
CO_2	mg/L	na	na	na	na	na	na

Project	Raytheon, Wayland, MA						
Date Received		3/29/13	4/1/13	3/29/13	3/29/13	3/29/13	3/29/13
Sample ID		REW-6	REW-7	REW-8	REW-9	REW-10	REW-11
Date Sampled		3/29/13	4/1/13	3/28/13	3/28/13	3/28/13	3/29/13

Dissolved Gasses							
Date Analyzed		4/1/13	4/1/13	3/29/13	3/29/13	3/29/13	4/1/13
Sample ID	Units	REW-6	REW-7	REW-8	REW-9	REW-10	REW-11
Methane	µg/L	169	309	455	439	23.3	82.6
Ethylene	µg/L	0.8	11.4	8.4	0.7	<0.3	2.8
Ethane	µg/L	0.4	<0.3	<0.3	<0.3	<0.3	0.3
Acetylene	µg/L	<2	<2	<2	<2	<2	<2

Anions							
Date Analyzed		3/29/13	3/29/13	3/29/13	3/29/13	3/29/13	3/29/13
Sample ID	Units	REW-6	REW-7	REW-8	REW-9	REW-10	REW-11
Chloride	mg/L	33	18	27	38	66	19
Nitrate	mg/L	<1	<1	<1	<1	<1	<1
Sulfate	mg/L	44	23	32	29	37	34
Organic Acids							
Date Analyzed		3/29/13	3/29/13	3/29/13	3/29/13	3/29/13	3/29/13
Lactate	mg/L	<1	<1	<1	<1	<1	<1
Acetate	mg/L	<1	5	29	50	<1	5
Propionate	mg/L	<1	<1	<1	<1	<1	<1
Butyrate	mg/L	3	<1	3	<1	<1	3

Chemistries							
Date Analyzed	3/29/13-4/2/13						
Sample ID	Units	REW-6	REW-7	REW-8	REW-9	REW-10	REW-11
Alkalinity	mg/L	120	120	120	160	100	120
Manganese	mg/L	na	na	na	na	na	na
NH_3-N	mg/L	0.03	0.07	0.06	0.04	0.05	0.15
PO_4	mg/L	0.38	0.09	0.19	0.20	0.05	0.29
Sulfide	mg/L	na	na	na	na	na	na
Total Iron	mg/L	16.2	17.2	16.0	12.2	1.36	17.9
COD	mg/L	na	na	na	na	na	na
TOC	mg/L	2.6	4.7	26.5	48.2	2.5	3.1
pH	pH units	6.82	6.64	6.65	6.59	7.14	6.83

H2/CO2 by TCD analysis							
Date Analyzed		na	na	na	na	na	na
Sample ID	Units	REW-6	REW-7	REW-8	REW-9	REW-10	REW-11
H_2	µM	na	na	na	na	na	na
CO_2	mg/L	na	na	na	na	na	na

Project	Raytheon, Wayland, MA		
Date Received		3/29/13	3/29/13
Sample ID		REW-12	Trip Blank
Date Sampled		3/28/13	na

Dissolved Gasses			
Date Analyzed		3/29/13	3/29/13
Sample ID	Units	REW-12	Trip Blank
Methane	µg/L	75.8	<0.3
Ethylene	µg/L	2.8	<0.3
Ethane	µg/L	<0.3	<0.3
Acetylene	µg/L	<2	<2

Anions			
Date Analyzed		3/29/13	3/29/13
Sample ID	Units	REW-12	Trip Blank
Chloride	mg/L	28	<1
Nitrate	mg/L	<1	<1
Sulfate	mg/L	51	<1
Organic Acids			
Date Analyzed		3/29/13	3/29/13
Lactate	mg/L	<1	<1
Acetate	mg/L	5	<1
Propionate	mg/L	<1	<1
Butyrate	mg/L	<1	<1

Chemistries			
Date Analyzed	3/29/13-4/2/13		
Sample ID	Units	REW-12	Trip Blank
Alkalinity	mg/L	100	10
Manganese	mg/L	na	na
NH_3-N	mg/L	0.07	<0.02
PO_4	mg/L	0.22	<0.05
Sulfide	mg/L	na	na
Total Iron	mg/L	20.0	<0.03
COD	mg/L	na	na
TOC	mg/L	7.9	<0.3
pH	pH units	6.72	7.68

H2/CO2 by TCD analysis			
Date Analyzed		na	na
Sample ID	Units	REW-12	Trip Blank
H_2	µM	na	na
CO_2	mg/L	na	na

TESTING METHODS

Ion Analysis

Inorganic anions were analyzed on a Metrohm 761 IC system according to modified EPA Method 300. Organic acids were analyzed by HPLC method with an organic acid column for lactate, acetate, propionate, and butyrate. A sample to be analyzed for anions is diluted with ultra pure water as necessary to obtain the analytes in the working range of the method, and is placed into the instrument, where the sample is introduced by an automated sampling device. All samples were placed sequentially in the auto sampler and the samples were injected sequentially into the ion-exchange column. Flows from the column were directed to a conductivity detector and the peak responses were processed for quantification. Identification of analytes is based on retention times for individual analytes, and quantification is based on analysis of prepared standards.

Gas Chromatography

Dissolved gasses were analyzed according to modified EPA Method 5021A. 10ml of the sample is transferred from the 40 ml VOA vials to a 20 ml sampling vial for a 1 to 1, headspace to liquid ratio. The headspace sample is analyzed by a HP 7694 Headspace Sampler, injected to a HP 5890 gas chromatograph. Gasses were detected by PID detector and followed by Flame Ionization Detector. Standards were prepared and analyzed in the same manner as samples.

Total Organic Carbon Analyzer

Organic carbon is measured according to a modified EPA Method 9060A using a Shimadzu TOC-5050A carbonaceous analyzer. This instrument converts the organic carbon in a sample to carbon dioxide (CO_2) by catalytic combustion. The CO_2 formed is then measured directly by and infrared detector. The amount of CO_2 in a sample is directly proportional to the concentration of carbonaceous material in the sample.

HACH Colorimeter

Chemical Tests for, Iron (Total), Manganese, Nitrogen (Ammonia), Phosphorous (Orthophosphate), and Sulfide are analyzed with a DR/ 890 Colorimeter. Alkalinity is analyzed with a HACH Alkalinity Digital Titrator. VOA vials for the analysis of these chemical tests have no preservative. The methods used are EPA approved and are as follows:

Alkalinity	Hach Titration
Ammonia Nitrogen	Hach 8155
COD	Hach 8000
Manganese	Hach 8034
Orthophosphate Phosphorous	Hach 8048
Sulfide	Hach 8131
Total Iron	Hach 8008

pH

The pH of samples is determined using a Corning 313 ATC electrode.

CHAIN OF CUSTODY RECORD

B T C **Bioremediation Treatability Center** • 25 Spring Street • Walpole, MA 02081-4301 • phone (508) 668-0191 • fax (508) 668-5175

Project Name & Project Number: RA-008

Project Manager: Vicki Parsiyan

Company / Address: Innovative Engineering Solutions Inc
25 Spring St Walpole MA 02081

Phone #: 508-668-0033 Fax #: 508-668-5175

Sampler's Signature:

Sampler's Printed Name: Davy Jones

Client Sample ID	Sampling Date	Sampling Time	No. of Sample Bottles per Well	Alkalinity	Ammonia	Anions (Cl^-, NO_3^-, SO_4)	Biotank	Bromide	COD	Dissolved Gas	H2 / CO2	Organic Acid	Orthophosphate	pH	Sulfide	TOC	Total Iron	Total Manganese	VOC Screen	
REW-1-20130328-01	3/28/13	1225	6	X	X	X				X		X	X	X		X	X			
REW-4-20130328-01	3/28/13	1325	6	X	X	X				X		X	X	X		X	X			
REW-5-20130328-01	3/28/13	1400	6	X	X	X				X		X	X	X		X	X			
REW-7-20130328-01	3/28/13	1105	6	X	X	X				X		X	X	X		X	X			
REW-8-20130328-01	3/28/13	0855	6	X	X	X				X		X	X	X		X	X			
REW-9-20130328-01	3/28/13	1030	6	X	X	X				X		X	X	X		X	X			
REW-10-20130328-01	3/28/13	0945	6	X	X	X				X		X	X	X		X	X			
REW-12-20130328-01	3/28/13	1150	6	X	X	X				X		X	X	X		X	X			

Special Instructions / Comments

Relinquished By	Received By	Relinquished By	Received By
Printed Name: Davy Jones	Printed Name: Susan Davis	Printed Name	Printed Name
Firm: IESI	Firm: BTC	Firm	Firm
Date/Time: 3/29/13 0520	Date/Time: 3/29/13 630	Date/Time	Date/Time

CHAIN OF CUSTODY RECORD

B T C **Bioremediation Treatability Center** • 25 Spring Street • Walpole, MA 02081-4301 • phone (508) 668-0191 • fax (508) 668-5175

Project Name & Project Number: RA-008

Project Manager: Vicki Parikyan

Company / Address: Innovative Engineering Solutions Inc
25 Spring St Walpole MA 02081

Phone #: 508-668-0033 Fax #: 508-668-5175

Sampler's Signature:

Sampler's Printed Name: Davy Jones Gareth Hirsch

Client Sample ID	Sampling Date	Sampling Time	No. of Sample Bottles per Well	Alkalinity	Ammonia	Anions (Cl^-, NO_3^-, SO_4^-)	Biotank	Bromide	COD	Dissolved Gas	H2 / CO2	Organic Acid	Orthophosphate	pH	Sulfide	TOC	Total Iron	Total Manganese	VOC Screen	
MW-265M-20130329-01	3/29/13	1130	6	X	X	X				X		X	X	X		X	X	X		
MW-268M-20130329-01	3/29/13	0835	6	X	X	X				X		X	X	X		X	X	X		
MW-532-20130329-01	3/29/13	0935	6	X	X	X				X		X	X	X		X	X	X		
MW-533-20130329-01	3/29/13	1040	6	X	X	X				X		X	X	X		X	X	X		
MW-560-20130329-01	3/29/13	1055	6	X	X	X				X		X	X	X		X	X	X		
MW-561-20130329-01	3/29/13	1015	6	X	X	X				X		X	X	X		X	X	X		
MW-562-20130329-01	3/29/13	1230	6	X	X	X				X		X	X	X		X	X	X		
MW-563-20130329-01	3/29/13	0935	6	X	X	X				X		X	X	X		X	X	X		
REW-6-20130329-01	3/29/13	0735	6	X	X	X				X		X	X	X		X	X	X		
REW-11-20130329-01	3/29/13	0805	6	X	X	X				X		X	X	X		X	X	X		
Trip Blanks	—	—	4																	

Special Instructions / Comments

Relinquished By	Received By	Relinquished By	Received By
Davy Jones	Chris Vorlicek	Chris Vorlicek	Susan Davis
Printed Name: Davy Jones	Printed Name: Chris Vorlicek	Printed Name: Chris Vorlicek	Printed Name: Susan Davis
Firm: IESI	Firm: IESI	Firm: IESI	Firm: BTC
Date/Time: 3/29/13 1245	Date/Time: 3/29/2013 1245	Date/Time: 3/29/2013 1346	Date/Time: 3/29/13 1346

CHAIN OF CUSTODY RECORD

B T C **Bioremediation Treatability Center** • 25 Spring Street • Walpole, MA 02081-4301 • phone (508) 668-0191 • fax (508) 668-5175

Project Name & Project Number: RA-008

Project Manager: Vicki Pearlman

Company / Address: Innovative Engineering Solutions Inc
25 Spring St Walpole MA 02081

Phone #: 508-668-0033 Fax #: 508-668-5175

Sampler's Signature:

Sampler's Printed Name: Daisy Sokes

Client Sample ID	Sampling Date	Sampling Time	No. of Sample Bottles per Well	Alkalinity	Ammonia	Anions (Cl^-, NO_3^-, SO_4^-)	Biotank	Bromide	COD	Dissolved Gas	H2 / CO2	Organic Acid	Orthophosphate	pH	Sulfide	TOC	Total Iron	Total Manganese	VOC Screen	
MW-261S-20130401-01	4/1/13	0825	6	X	X	X				X		X	X	X		X	X			
RSB-7-20130401-01	4/1/13	0955	6	X	X	X				X		X	X	X		X	X			

Special Instructions / Comments

Relinquished By	Received By	Relinquished By	Received By
Printed Name: Daisy Sokes	Printed Name: Susan Davis	Printed Name	Printed Name
Firm: IES	Firm: BTC	Firm	Firm
Date/Time: 4/1/13 1430	Date/Time: 4/1/13 2:30	Date/Time	Date/Time

Well ID	Date Sampled	VOCs Mass Basis (ug/l)												Bio-Parameters (mg/l)																pH	H2 (µM)	CO2 (mg/l)	VOCs Molar Basis (umol/l)										
		Methane	Ethene	Ethane	VC	CA	1,1DCE	1,1DCA	cis 12DCE	1,1,1 TCA	TCE	PCE	Total CVOCs	Chloride	Nitrate	Sulfate	Lactate	Acetate	Proprionate	Butyrate	Alkalinity	Mn	NH3	PO4	Sulfide	Iron	COD	TOC				Ethene	Ethane	VC	CA	1,1DCE	1,1DCA	cis 1, 2 DCE	1,1,1 TCA	TCE	PCE	Total CVOCs
																																28	*28*	*61.5*	*64*	*97*	*99*	*97*	*133*	*131.4*	*165.85*	
MW-562	10/20/2010	255	6	2	12	0	0	0	93	0	310	20	435	35	0	43	0	0	0	0	100	0.6	0.04	0.15	na	7	na	2.1	6.5	19	24	0.226	0.068	0.195	0.000	0.000	0.000	0.959	0.000	2.359	0.121	3.6
	11/18/2010	301	6	3	0	0	0	0	162	0	760	33	955	33	0	42	0	0	0	0	120	na	0	0	na	7	na	4.0	6.7	na	na	0.209	0.105	0.000	0.000	0.000	0.000	1.671	0.000	5.783	0.197	7.7
	12/2/2010	185	5	2	12	0	0	0	147	0	699	39	897	28	0	35	7	7	0	0	120	0	0.02	0.06	na	8	na	453	6.47	0	38	0.179	0.071	0.195	0.000	0.000	0.000	1.515	0.000	5.320	0.235	7.3
	2/1/2011	79	2	0	11	0	2	0	1308	0	6	0	1,327	60	0	23	0	8	0	0	160	na	0.02	276	na	6	na	146	6.48	0	na	0.068	0.000	0.174	0.000	0.022	0.000	13.489	0.000	0.042	0.000	13.7
	3/30/2011	73	2	0	8	0	0	0	1085	0	25	16	1,134	24	0	4	0	12	0	6	240	na	33	152	na	8	na	708	7.18	na	na	0.054	0.013	0.124	0.000	0.000	0.000	11.185	0.000	0.190	0.098	11.6
	04/20/11	75	0	0	0	0	0	0	1300	0	0	0	1,300	25	0	14	0	3	0	0	260	na	50	80	na	7	na	641	7.30	na	na	0.000	0.000	0.000	0.000	0.000	0.000	13.402	0.000	0.000	0.000	13.4
	06/16/11	103	1	1	25	0	0	0	1259	0	4	0	1,288	32	0	0	0	16	<1	<1	220	na	15	112	na	6	na	294	6.82	na	na	0.045	0.022	0.403	0.000	0.000	0.000	12.979	0.000	0.032	0.000	13.4
	07/18/11	389	3	1	47	0	0	0	950	0	0	0	997	28	0	11	0	77	0	0	300	na	26	59	na	4	na	135	7.06	na	na	0.120	0.026	0.762	0.000	0.000	0.000	9.798	0.000	0.000	0.000	10.6
	09/19/11	2581	4	2	43	0	0	0	703	0	0	0	745	31	0	0	0	135	0	7	280	na	na	na	na	4	na	219	6.86	na	na	0.157	0.075	0.692	0.000	0.000	0.000	7.243	0.000	0.000	0.000	7.9
	10/18/11	10036	0	0	46	0	0	0	661	0	0	0	706	33	0	0	0	227	0	9	280	na	14	2	na	6	na	206	6.75	na	na	0.000	0.000	0.740	0.000	0.000	0.000	6.811	0.000	0.000	0.000	7.6
	12/09/11	23502	0	0	211	0	0	29	431	62	18	0	752	33	0	0	0	306	0	0	320	na	6	1	na	6	na	204	6.72	na	na	0.000	0.000	3.433	0.000	0.000	0.294	4.447	0.465	0.139	0.000	8.8
	01/05/12	21928	0	0	310	0	0	0	270	0	0	0	580	25	0	4	0	275	0	5	320	na	5	0	na	53	na	183	6.64	na	na	0.000	0.000	5.041	0.000	0.000	0.000	2.784	0.000	0.000	0.000	7.8
	04/03/12	26737	40	0	200	0	0	0	300	0	0	0	500	33	0	0	0	467	0	8	360	na	2	4	na	77	na	382	6.48	na	na	1.442	0.000	3.252	0.000	0.000	0.000	3.093	0.000	0.000	0.000	6.3
	07/23/12	27386	41	0	54	0	0	0	0	0	0	0	54	33	0	1	0	117	<1	<1	485	na	8	2	na	118	na	122	6.63	na	na	1.447	0.000	0.878	0.000	0.000	0.000	0.000	0.000	0.000	0.000	0.9
	10/09/12	28010	18	0	0	0	0	0	0	0	0	0	0	27	0	0	0	172	<1	<1	520	na	7	<0.05	na	110	na	103	6.85	na	na	0.652	0.000	0.000	0.000	0.000	0.000	0.000	0.000	0.000	0.000	0.0
	01/10/13	25342	17	8	0	0	0	0	0	0	0	0	0	30	0	0	0	132	<1	<1	705	na	5	0	na	80	na	81	6.54	na	na	0.613	0.290	0.000	0.000	0.000	0.000	0.000	0.000	0.000	0.000	0.0
	03/29/13	35530	18	21	0	0	0	0	0	0	0	0	0	30	0	0	0	351	<1	5	580	na	2	1	na	127	na	175	6.86	na	na	0.655	0.753	0.000	0.000	0.000	0.000	0.000	0.000	0.000	0.000	0.0
REW-1	10/20/2010	3	0	0	0	0	0	0	2	200	27	1	230	4	0	19	0	0	0	0	80	1.1	0.0	0.1	na	2	na	1.1	6.5	0.0	25	0.000	0.000	0.000	0.000	0.000	0.000	0.021	1.504	0.205	0.006	1.7
	11/18/2010	3	0	0	0	0	0	0	0	0	114	0	114	3	2	13	0	0	0	0	60	na	0.0	0.0	na	2	na	1.8	6.4	na	na	0.000	0.000	0.000	0.000	0.000	0.000	0.000	0.000	0.871	0.000	0.9
	12/2/2010	333	4	1	17	0	2	0	226	300	2,845	78	3,468	30	0	43	0	0	0	0	120	0.0	0.0	0.1	na	7	na	4.3	6.7	0.0	26	0.157	0.036	0.276	0.000	0.016	0.000	2.330	2.256	21.651	0.470	27.0
	3/30/2011	160	2	0	10	0	0	0	408	0	1,669	59	2,146	25	0	28	0	0	0	0	140	na	0.0	5.5	na	7	na	98	6.8	na	na	0.057	0.012	0.155	0.000	0.000	0.000	4.210	0.000	12.702	0.354	17.4
	4/21/2011	279	0	0	0	0	0	0	810	0	1,100	0	1,910	16	0	26	0	0	0	0	160	na	0.0	4.7	na	15	na	345	6.8	na	na	0.000	0.000	0.000	0.000	0.000	0.000	8.351	0.000	8.371	0.000	16.7
	6/16/2011	328	2	0	41	0	0	0	721	0	459	21	1,240	32	0	19	0	10	0	3	180	na	2.0	3.2	na	9	na	244	6.7	na	na	0.059	0.016	0.661	0.000	0.000	0.000	7.429	0.000	3.489	0.124	11.7
	7/18/2011	478	3	1	36	0	0	0	840	0	324	0	1,200	27	0	15	0	13	0	0	220	na	3.0	4.9	na	11	na	178	6.7	na	na	0.110	0.045	0.590	0.000	0.000	0.000	8.660	0.000	2.467	0.000	11.7
	9/19/2011	1,201	6	2	47	0	0	0	730	0	123	0	900	31	0	11	0	52	0	0	260	na	na	na	na	11	na	250	6.8	na	na	0.199	0.075	0.766	0.000	0.000	0.000	7.526	0.000	0.937	0.000	9.2
	10/18/2011	1,570	6	0	54	0	0	0	736	0	122	0	912	32	0	7	0	84	0	0	240	na	5.0	0.8	na	11	na	208	6.8	na	na	0.218	0.000	0.885	0.000	0.000	0.000	7.591	0.000	0.925	0.000	9.4
	12/9/2011	9,702	12	0	72	0	0	17	402	36	21	0	547	16	0	0	0	147	0	0	260	na	0.6	1.1	na	11	na	71	6.8	na	na	0.432	0.000	1.168	0.000	0.000	0.173	4.147	0.267	0.157	0.000	5.9
	1/5/2012	6,694	15	0	110	0	0	0	600	0	76	0	786	24	0	5	0	190	0	1	340	na	0.2	<0.05	na	23	na	306	6.7	na	na	0.552	0.000	1.789	0.000	0.000	0.000	6.186	0.000	0.578	0.000	8.6
	4/3/2012	12,538	171	0	170	0	0	0	390	0	61	0	621	31	0	4	<1	419	<1	5	380	na	4.0	0.5	na	40	na	434	6.7	na	na	6.097	0.000	2.764	0.000	0.000	0.000	4.021	0.000	0.468	0.000	7.3
	7/23/2012	7,040	118	0	99	0	0	0	210	0	0	0	309	31	0	3	<1	435	<1	<1	400	na	3.0	0.2	na	59	na	325	6.4	na	na	4.209	0.000	1.610	0.000	0.000	0.000	2.165	0.000	0.000	0.000	3.8
	10/9/2012	21,589	254	6	90	0	0	0	180	0	0	0	270	23	0	0	0	361	<1	12	460	na	1.9	0.1	na	104	na	355	6.8	na	na	9.083	0.207	1.463	0.000	0.000	0.000	1.856	0.000	0.000	0.000	3.3
	1/10/2013	23,751	53	0	10	0	0	0	11	0	0	0	21	14	0	0	0	173	<1	5	360	na	0.9	<0.05	na	48	na	182	6.8	na	na	1.893	0.000	0.163	0.000	0.000	0.000	0.113	0.000	0.000	0.000	0.3
	3/28/2013	29,995	43	27	0	0	0	0	81	0	0	0	81	26	0	1	0	506	5	21	780	na	3.0	1.4	na	112	na	461	6.7	na	na	1.531	0.977	0.000	0.000	0.000	0.000	0.835	0.000	0.000	0.000	0.8
REW-2	10/20/2010	4	1	1	0	0	0	0	23	0	220	6	249	8	0	44	0	0	0	5	100	0.7	0.0	0.2	na	1	na	1	6.7	<1	11	0.036	0.029	0.000	0.000	0.000	0.000	0.237	0.000	1.674	0.036	1.9
	11/18/2010	9	1	0	0	0	0	0	70	0	259	17	346	14	1	32	0	0	0	0	80	na	0.3	0.1	na	1	na	1.6	6.5	na	na	0.026	0.000	0.000	0.000	0.000	0.000	0.719	0.000	1.971	0.103	2.8
	12/2/2010	28	1	0	9	0	0	0	96	0	387	21	513	19	1	30	0	0	0	0	60	0.0	0.0	0.1	na	5	na	1.6	6.6	<1	30	0.050	0.000	0.146	0.000	0.000	0.000	0.990	0.000	2.945	0.127	4.2
	3/30/2011	18	1	0	7	0	0	0	158	0	221	17	404	24	0	4	0	0	0	0	100	na	0.0	0.1	na	5	na	45	6.7	na	na	0.038	0.000	0.118	0.000	0.000	0.000	1.633	0.000	1.682	0.103	3.5
	4/21/2011	23	0	0	0	0	0	0	290	0	200	0	490	32	0	26	0	0	0	0	120	na	0.0	0.5	na	11	na	76	6.6	na	na	0.000	0.000	0.000	0.000	0.000	0.000	2.990	0.000	1.522	0.000	4.5
	7/21/2010	0	0	0	62	0	0	0	420	0	260	24	766	8	0	31	0	0	0	0	100	na	0.0	0.1	na	3	na	1	6.5	na	na	0.000	0.000	1.008	0.000	0.000	0.000	4.330	0.000	1.979	0.145	7.5
	10/4/2010	0	0	0	65	0	0	0	320	0	230	26	641	8	0	28	0	0	0	0	100	na	0.0	0.1	na	3	na	1	6.5	na	na	0.000	0.000	1.057	0.000	0.000	0.000	3.299	0.000	1.750	0.157	6.3
MW-265M	4/21/2011	6	0	0	17	0	0	0	210	0	464	36	727	8	0	26	0	0	0	0	100	na	0.0	0.1	na	1	na	1	6.5	na	na	0.000	0.000	0.282	0.000	0.000	0.000	2.170	0.000	3.529	0.215	6.2
	7/18/2011	15	3	0	23	0	0	0	146	0	157	24	350	17	0	26	0	0	0	0	100	na	0.0	0.1	na	1	na	2	6.5	na	na	0.097	0.000	0.380	0.000	0.000	0.000	1.508	0.000	1.193	0.142	3.2
	9/19/2011	43	1	0	20	0	0	0	205	0	175	18	419	23	0	29	0	0	0	0	100	na	na	na	na	na	na	113	6.5	na	na	0.046	0.000	0.330	0.000	0.000	0.000	2.117	0.000	1.329	0.110	3.9
	10/18/2011	71	2	0	24	0	0	0	401	0	39	0	464	30	0	5	0	12	0	0	160	na	0.0	<0.05	na	3	na	57	6.5	na	na	0.067	0.000	0.386	0.000	0.000	0.000	4.132	0.000	0.299	0.000	4.8
	1/5/2012	1,101	2	0	29	0	0	0	520	0	0	0	549	32	0	5	0	18	0	0	200	na	0.1	0.2	na	6	na	9	6.5	na	na	0.089	0.000	0.472	0.000	0.000	0.000	5.361	0.000	0.000	0.000	5.8
	4/2/2012	1,193	4	0	30	0	1	1	490	0	0	0	522	32	0	0	0	44	<1	<1	260	na	0.1	0.2	na	5	na	29	7.0	na	na	0.140	0.000	0.485	0.000	0.010	0.010	5.052	0.000	0.000	0.000	5.6
	7/23/2012	23,309	0	0	250	0	0	0	170	0	0	0	420	30	0	1	0	26	<1	<1	360	na	0.1	0.3	na	11	na	16	6.6	na	na	0.000	0.000	4.065	0.000	0.000	0.000	1.753	0.000	0.000	0.000	5.8
	10/9/2012	28,109	4	0	100	0	0	0	350	0	0	0	450	22	0	0	0	58	<1	<1	400	na	0.1	<0.05	na	24	na	53	6.7	na	na	0.150	0.000	1.626	0.000	0.000	0.000	3.608	0.000	0.000	0.000	5.2
	1/10/2013	30,867	548	0	0	0	0	0	0	0	0	0	0	29	0	0	0	594	3	9	670	na	0.4	0.8	na	82	na	498	6.8	na	na	19.569	0.000	0.000	0.000	0.000	0.000	0.000	0.000	0.000	0.000	0.0
	3/29/2013	36,553	20	0	26	0	0	0	32	0	0	0	58	23	0	0	0	361	0	7	610	na	0.1	0.8	na	56	na	225	7.0	na	na	0.725	0.000	0.423	0.000	0.000	0.000	0.330	0.000	0.000	0.000	0.8
MW-266Ma	7/21/2010				0	0	0	0	13	0	36	1	50			36												1														
	10/4/2010				0	0	0	0	14	0	40	1	55			32												1														
	4/4/2011				0	0	0	0	2	0	6	0	8																													
	4/2/2012				0	0	0	0	5	0	13	0	18																													
	10/9/2012				1	0	0	0	11	0	11	0	23																													
	3/29/2013				0	0	0	0	9	0	27	0	36																													
MW-266Mb	7/21/2010				26	0	0	0	240	0	98	22	386			30												1														
	10/4/2010				25	0	0	0	230	0	95	18	368			26												1														
	4/21/2011	na	na	na	0	0	0	0	71	0	70	8	149	na	na	na	na	na	na	na	100	na	<0.02	0.1	na	na	na	<0.3	6.6	na	na											
	10/18/2011	na	na	na	23	0	0	0	200	0	71	14	308	na	na	na	na	na	na	na	120	na	0.1	<0.05	na	na	na	1	6.5	na	na											
	4/2/2012	na	na	na	28	0	0	0	210	0	77	15	330																													
	10/9/2012				16	0	0	0	150	0	70	11	247																													
	3/29/2013				7.5	0	0	0	80	0	53	13	154																													
MW-551	7/21/2010	na	0	0	0	0	0	0	0	0	140	4	144			34												<1				0.000	0.000	0.000	0.000	0.000	0.000	0.000	0.000	1.065	0.027	1.1
	10/4/2010	na	0	0	0	0	0	0	0	0	120	3	123			31												1				0.000	0.000	0.000	0.000	0.000	0.000	0.000	0.000	0.913	0.015	0.9
	4/21/2011	na	0	0	0	0	0	0	0	0	950	0	950	na	na	31	na	na	na	na	na	na	na	na	na	na	na	na	na	na	na	0.000	0.000	0.000	0.000	0.000	0.000	0.000	0.000	7.230	0.000	7.2
	10/18/2011	na	0	0	0	0	0	0	0	0	0	0	0	na	na	31	na	na	na	na	na	na	na	na	na	na	na	na	na	na	na	0.000	0.000	0.000	0.000	0.000	0.000	0.000	0.000	0.000	0.000	0.0
	4/2/2012	19,989	0	0	19	0	0	0	83	0	6	0	109	6	0	3	0	10	<1	<1	100	na	0.1	0.5	na	15	na	97	7.0	na	na	0.000	0.000	0.312	0.000	0.000	0.000	0.860	0.000	0.049	0.000	1.2
	10/9/2012	18,573	0	0	0	0	0	0	230	0	180	0	410	7	<1	3	<1	26	<1	<1	120	na	0.0	0.3	na	15	na	65	6.8	na	na			0.000	0.000	0.000	0.000	2.371	0.000	1.370	0.000	3.7
	3/29/2013	18,573	0	0	130	0	0	0	240	0	0	0	370	7	0	3	0	26	<1	<1	120	na	0.0	0.3	na	15	na	65	6.8	na	na	0.000	0.000	2.114	0.000	0.000	0.000	2.474	0.000	0.000	0.000	4.6
MW-261S	7/21/2010	na	na	na	0	0	0	0	24	0	1,200	23	1,247			33												1				0.000	0.000	0.000	0.000	0.000	0.000	0.247	0.000	9.132	0.139	9.5
	10/4/2010	na	na	na	0	0	0	0	28	0	1,200	22	1,250			28												1				0.000	0.000	0.000	0.000	0.000	0.000	0.289	0.000	9.132	0.133	9.6
	10/18/2011	na	na	na	0	0	0	0	1,000	0	0	0	1,000	na	na	na	na	na	na	na	160	na	0.1	<0.05	na	na	na	523	6.7	na	na	0.000	0.000	0.000	0.000	0.000	0.000	10.309	0.000	0.000	0.000	10.3
	4/2/2012	20,946	18	0	139	0	0	0	810	0	0	0	949	19	<1	<1	<1	94	<1	<1	240	na	0.1	0.1	na	47	na	410	6.9	na	na	0.654	0.000	2.265	0.000	0.000	0.000	8.351	0.000	0.000	0.000	10.6
	7/23/2012	23,351	0	0	380	0	0	0	360	0	0	0	740	22	0	1	0	154	0	0	300	na	0.1	0.1	na	40	na	294	6.6	na	na	0.000	0.000	6.179	0.000	0.000	0.000	3.711	0.000	0.000	0.000	9.9
	10/9/2012	25,332	48	0	130	0	0	0	67	0	0	0	197	14	<1	<1	<1	79	<1	<1	360	na	0.0	0.2	na	59	na	73	6.8	na	na	1.718	0.000	2.114	0.000	0.000	0.000	0.691	0.000	0.000	0.000	2.8
	1/10/2013	19,382	15	0	78	0	0	0	30	0	6	0	114	21	<1	<1	<1	189	<1	<1	360	na	0.2	0.3	na	55	na	256	6.8	na	na	0.530	0.000	1.268	0.000	0.000	0.000	0.309	0.000	0.048	0.000	1.6
	4/1/2013	21,890	28	0	0	0	0	0	0	0	0	0	0	24	0	0	0	175	<1	6	400	na	0.2	1.5	na	75	na	110	6.8	na	na	1.007	0.000	0.000	0.000	0.000	0.000	0.000	0.000	0.000	0.000	0.0
MW-552	7/21/2010	na	na	na	0	0	0	0	260	0	3,300	240	3,800			78												2				0.000	0.000	0.000	0.000	0.000	0.000	2.680	0.000	25.114	1.447	29.2
	10/4/2010	na	na	na	0	0	0	0	260	0	2,600	210	3,070			30												1				0.000	0.000	0.000	0.000	0.000	0.000	2.680	0.000	19.787	1.266	23.7
	10/18/2011	na	na	na	0	0	0	0	1,100	0	0	0	1,100	na	na	na	na	na	na	na	240	na	0.1	<0.05	na	na	na	462	6.8	na	na	0.000	0.000	0.000	0.000	0.000	0.000	11.340	0.000	0.000	0.000	11.3
	4/2/2012	19,950	0	0	8	0	3	0	2,100	0	130	0	2,241	10	0	3	<1	70	<1	<1	340	na	0.1	1.0	na	16	na	100	6.8	na		0.000	0.000	0.133	0.000	0.034	0.000	21.649	0.000	0.986	0.000	22.8
	7/23/2012	13,493	0	0	18	0	0	0	1,200	0	97	0	1,315	7	0	6	<1	4	<1	<1	220	na	0.3	0.7	na	10	na	6	6.8	na	na	0.000	0.000	0.293	0.000	0.000	0.000	12.371	0.000	0.738	0.000	13.4
	10/9/2012	7,770	0	0	0	0	0	0	1,400	0	0	0	1,400	6	0	5	<1	<1	<1	<1	180	na	0.3	0.5	na	8	na	6	6.9	na	na	0.000	0.000	0.000	0.000	0.000	0.000	14.433	0.000	0.000	0.000	14.4
	1/10/2013	13,300	0	0	160	0	0	0	1,400	0	71	0	1,631	9	0	4	<1	42	<1	1	280	na	0.3	0.2	na	23	na	39	6.9	na	na	0.000	0.000	2.602	0.000	0.000	0.000	14.433	0.000	0.540	0.000	17.6

Well ID	Date Sampled	VOCs Mass Basis (ug/l)												Bio-Parameters (mg/l)															pH	H2 (µM)	CO2 (mg/l)	VOCs Molar Basis (umol/l)										
		Methane	Ethene	Ethane	VC	CA	1,1DCE	1,1DCA	cis 12DCE	1,1,1 TCA	TCE	PCE	Total CVOCs	Chloride	Nitrate	Sulfate	Lactate	Acetate	Proprionate	Butyrate	Alkalinity	Mn	NH3	PO4	Sulfide	Iron	COD	TOC				Ethene	Ethane	VC	CA	1,1DCE	1,1DCA	cis 1, 2 DCE	1,1,1 TCA	TCE	PCE	Total CVOCs
																																28	*28*	*61.5*	*64*	*97*	*99*	*97*	*133*	*131.4*	*165.85*	
	3/29/2013	12,420	20	0	260	0	0	0	320	0	39	0	619	9	0	6	0	51	<1	<1	300	na	0.2	0.2	na	21	na	28	6.8	na	na	0.729	0.000	4.228	0.000	0.000	0.000	3.299	0.000	0.297	0.000	7.8
MW-553	7/21/2010	0	0	0	0	0	0	0	11	0	57	11	79			20												1				0.000	0.000	0.000	0.000	0.000	0.000	0.113	0.000	0.434	0.066	0.6
	10/4/2010	0	0	0	0	0	0	0	12	0	65	10	87			16												1				0.000	0.000	0.000	0.000	0.000	0.000	0.124	0.000	0.495	0.060	0.7
	10/18/2011	0	0	0	0	0	0	0	490	0	0	0	490	na	na	na	na	na	na	na	180	na	0.1	<0.05	na	na	na	567	7.2	na	na	0.000	0.000	0.000	0.000	0.000	0.000	5.052	0.000	0.000	0.000	5.1
	4/2/2012	13,513	14	0	30	0	0	0	390	0	4	0	424	9	0	3	0	81	<1	<1	180	na	<0.02	0.2	na	5	na	287	7.3	na	na	0.488	0.000	0.489	0.000	0.000	0.000	4.021	0.000	0.027	0.000	4.5
	7/23/2012	16,304	15	4	180	0	0	0	200	0	0	0	380	12	0	2	0	277	<1	1	340	na	0.0	0.2	na	22	na	400	6.9	na	na	0.526	0.145	2.927	0.000	0.000	0.000	2.062	0.000	0.000	0.000	5.0
	10/9/2012	15,703	173	0	93	0	0	0	0	0	0	0	93	11	0	0	0	275	0	0	360	na	0.0	0.2	na	24	na	468	6.8	na	na	6.167	0.000	1.512	0.000	0.000	0.000	0.000	0.000	0.000	0.000	1.5
	3/29/2013	24,936	18	0	0	0	0	0	0	0	0	0	0	12	0	0	0	252	<1	3	550	na	0.0	0.6	na	124	na	300	6.9	na	na	0.650	0.000	0.000	0.000	0.000	0.000	0.000	0.000	0.000	0.000	0.0
MW-561	7/21/2010	0	0	0	0	0	0	0	130	0	690	29	849			28													6.1			0.000	0.000	0.000	0.000	0.000	0.000	1.340	0.000	5.251	0.175	6.8
	10/4/2010	0	0	0	0	0	0	0	140	0	550	20	710			17													9.9			0.000	0.000	0.000	0.000	0.000	0.000	1.443	0.000	4.186	0.121	5.7
	4/21/2011	0	0	0	0	0	0	0	250	0	1,700	57	2,007	na	0	22	na	na	na	na	140	na	0.0	0.1	na	8	na	5	6.7	na	na	0.000	0.000	0.000	0.000	0.000	0.000	2.577	0.000	12.938	0.344	15.9
	10/18/2011	0	0	0	0	0	0	0	400	0	2,200	75	2,675	na	0	22	na	na	na	na	140	na	0.1	<0.05	na	8	na	3	6.6	na	na	0.000	0.000	0.000	0.000	0.000	0.000	4.124	0.000	16.743	0.452	21.3
	4/2/2012	130	13	0	160	0	5	0	1,700	0	3,100	170	5,135	20	0	22	0	0	0	0	140	na	0.0	0.2	na	8	na	3	7.0	na	na	0.473	0.000	2.602	0.000	0.055	0.000	17.526	0.000	23.592	1.025	44.8
	10/9/2012	185	8	0	93	0	7	0	2,500	0	2,100	110	4,810	17	0	9	0	0	<1	<1	240	na	0.1	0.2	na	12	na	4	7.0	na	na	0.289	0.000	1.512	0.000	0.070	0.000	25.773	0.000	15.982	0.663	44.0
	3/29/2013	1,544	96	0	310	0	0	0	220	0	96	0	626	53	0	24	0	<1	<1	2	160	na	0.0	<0.05	na	12	na	3	7.2	na	na	3.434	0.000	5.041	0.000	0.000	0.000	2.268	0.000	0.731	0.000	8.0
IW-4	7/20/2010	0	0	0	920	0	0	0	0	0	0	0	920	na	na	na	na	na	na	na	na	na	na	na	na	na	na	na	na	na	na	0.000	0.000	14.959	0.000	0.000	0.000	0.000	0.000	0.000	0.000	15.0
	4/21/2011	0	0	0	1,400	0	0	0	0	0	0	0	1,400	na	na	na	na	na	na	na	na	na	na	na	na	na	na	na	na	na	na	0.000	0.000	22.764	0.000	0.000	0.000	0.000	0.000	0.000	0.000	22.8
	10/18/2011	0	0	0	860	0	0	0	14	0	0	0	874	na	na	na	na	na	na	na	na	na	na	na	na	na	na	na	na	na	na	0.000	0.000	13.984	0.000	0.000	0.000	0.144	0.000	0.000	0.000	14.1
	4/2/2012	7	1	0	15	0	0	3.4	1.3	0	0	0	20	30	0	29	0	0	<1	<1	140	na	4.0	0.3	na	2	na	4	7.1	na	na	0.022	0.000	0.244	0.000	0.000	0.034	0.013	0.000	0.000	0.000	0.3
	10/9/2012	960	45	0	300	0	0	1.4	22	0	1	0	325	11	0	11	<1	<1	<1	<1	140	na	0.5	0.4	na	5	na	1	7.1	na	na	1.617	0.000	4.878	0.000	0.000	0.014	0.227	0.000	0.009	0.000	5.1
IW-5	7/21/2010	0	0	0	82	0	0	0	920	0	1,500	43	2,545			21												220				0.000	0.000	1.333	0.000	0.000	0.000	9.485	0.000	11.416	0.259	22.5
	10/4/2010	0	0	0	120	0	0	0	670	0	1,700	44	2,534			18												22				0.000	0.000	1.951	0.000	0.000	0.000	6.907	0.000	12.938	0.265	22.1
	4/21/2011	0	0	0	73	0	0	0	710	0	1,900	52	2,735	na	na	na	na	na	na	na	na	na	na	na	na	na	na	na	na	na	na	0.000	0.000	1.187	0.000	0.000	0.000	7.320	0.000	14.460	0.314	23.3
	10/18/2011	0	0	0	48	0	0	0	720	0	1,200	27	1,995	na	na	na	na	na	na	na	na	na	na	na	na	na	na	na	na	na	na	0.000	0.000	0.780	0.000	0.000	0.000	7.423	0.000	9.132	0.163	17.5
	4/2/2012	4,823	10	0	99	0	0	0	820	0	1500	0	2,419	17	0	29	9	16	<1	<1	200	na	0	0	na	2	na	18	12	na	na	0.345	0.000	1.610	0.000	0.000	0.000	8.454	0.000	11.416	0.000	21.5
	10/9/2012	2,224	35	3	180	0	0	0	630	0	660	0	1,470	15	0	11	0	20	<1	<1	160	na	0	<0.05	na	4	na	14	9	na	na	1.259	0.117	2.927	0.000	0.000	0.000	6.495	0.000	5.023	0.000	14.4
IW-15	7/21/2010	0	0	0	230	0	0	0	1,000	0	1,900	0	3,130			43												13				0.000	0.000	3.740	0.000	0.000	0.000	10.309	0.000	14.460	0.000	28.5
	10/4/2010	0	0	0	360	0	0	0	1,000	0	2,200	53	3,613			46												3				0.000	0.000	5.854	0.000	0.000	0.000	10.309	0.000	16.743	0.320	33.2
	4/21/2011	0	0	0	240	0	0	0	1,600	0	3,200	0	5,040	na	na	na	na	na	na	na	na	na	na	na	na	na	na	na	na	na	na	0.000	0.000	3.902	0.000	0.000	0.000	16.495	0.000	24.353	0.000	44.8
	10/18/2011	0	0	0	310	0	8	0	414	0	270	7	1,008	na	na	na	na	na	na	na	na	na	na	na	na	na	na	na	na	na	na	0.000	0.000	5.041	0.000	0.080	0.000	4.266	0.000	2.055	0.040	11.5
	4/3/2012	58	5	0	49	0	0	1.1	8	0	13	1.5	73	111	0	64	0	0	<1	<1	120	na	0	0	na	5	na	2	7	na	na	0.171	0.000	0.797	0.000	0.000	0.011	0.087	0.000	0.099	0.009	1.0
	10/9/2012	313	9	0	89	0	0	1.2	11	0	11	1.3	114	52	0	13	0	16	<1	<1	200	na	0	0	na	3	na	11	7	na	na	0.306	0.000	1.447	0.000	0.000	0.012	0.113	0.000	0.084	0.008	1.7
MW-560	7/21/2010	0	0	0	0	0	0	0	42	0	9	0	51																			0.000	0.000	0.000	0.000	0.000	0.000	0.433	0.000	0.066	0.000	0.5
	4/21/2011	0	0	0	1	0	0	0	4	0	6	0	11	na	na	na	na	na	na	na	200	na	0.3	0.1	na	na	na	1	11.5	na	na	0.000	0.000	0.023	0.000	0.000	0.000	0.044	0.000	0.043	0.000	0.1
	4/2/2012	62	1	0	0.6	0	0	0	1.7	0	3.2	0	6	10	0	23	5	<1	<1	<1	180	na	1.0	0.1	na	0	na	2	11.6	na	na	0.046	0.000	0.010	0.000	0.000	0.000	0.018	0.000	0.024	0.000	0.1
	10/9/2012	86	2	0	1	0	0	0	2.1	0	4	0	7	18	0	13	<1	<1	<1	<1	120	na	0.6	0.2	na	0	na	1	11.1	na	na	0.076	0.000	0.016	0.000	0.000	0.000	0.022	0.000	0.030	0.000	0.1
	3/29/2013	167	2	0	1.4	0	0	0	16	0	3	0	20	15	0	16	0	17	<1	<1	100	na	0.7	<0.05	na	0	na	53	10.7	na	na	0.060	0.000	0.023	0.000	0.000	0.000	0.163	0.000	0.021	0.000	0.2
	2/11/2004	na	na	na	280	0	0	0	6,900	0	2,800	0	9,980																													
	4/3/2006	na	na	na	230	0	0	0	5,100	0	2,100	51	7,481																													
	3/6/2008	32	2	0	112	0	0	0	3,310	0	1,990	58	5,470																													
	4/14/2009	26	1.5	0	110	0	0	0	3,000	0	2,000	72	5,182																													
MW-268M	7/21/2010	na	na	na	110	0	0	0	3,300	0	1,600	42	5,052			52												2														
	4/21/2011	na	na	na	na	na	na	na	na	na	na	na		na	na	na	na	na	na	na	120	na	0.1	0.2	na	na	na	0	6.6	na	na											
	4/2/2012	33	3	2	120	0	3	7	2,600	0	1,300	0	4,030	na	na	na	na	na	na	na	100	na	0.1	0.6	na	na	na	2	6.9	na	na	0.115	0.069	1.951	0.000	0.033	0.068	26.804	0.000	9.893	0.000	38.7
	10/9/2012	na	na	na	94	0	0	0	2,400	0	1,100	0	3,594	na	na	na	na	na	na	na	120	na	0.1	0.3	na	na	na	2	6.8	na	na											
	3/29/2013	29	4	6	91	10	0	0	2,100	7	1,100	42	3,351	16	0	33	0	0	<1	<1	120	na	0.1	0.3	na	21	na	2	6.9	na	na	0.154	0.211	1.480	0.163	0.000	0.000	21.649	0.056	8.371	0.253	32.0
MW-268D	7/21/2010				0	0	0	0	13	0	10	0	23			36												<1														
	4/4/2011				0	0	0	0	10	0	8	0	18																													
	4/2/2012				0	0	0	0	10	0	8.1	0	18																													
	10/9/2012				0	0	0	0	9.8	0	6.8	0	17																													
	3/29/2013				0	0	0	0	9.3	0	6.3	0	16																													
MW-269-Ma	7/21/2010				0	0	0	0	2	0	0	0	2																													
	4/6/2011				0	0	0	1	2	0	0	0	3																													
	10/9/2012				0	0	0	0	1	0	0	0	1																													
	3/29/2013					0	0	0	2	0	1	0	3																													
MW-264M	7/21/2010				4	0	0	0	56	0	25	8	93															1														
	4/4/2011				0	0	0	0	28	0	37	7	72																													
	4/2/2012				0	0	0	0	13	0	24	5.7	43																													
	10/9/2012				0	0	0	0	9.5	0	13	5.1	28																													
	3/29/2013				0	0	0	0	6.2	0	8.6	1.5	16																													
MW-563	12/9/2012	81	12	0	35	0	0	0	250	0	260	0	545	40	0	48	0	0	<1	<1	120	na	0.1	0.7	na	16	na	3	6.8	na	na	0.443	0.000	0.563	0.000	0.000	0.000	2.577	0.000	1.979	0.000	5.1
	1/10/2013	141	13	0	47	0	2	3	380	0	150	3	585	43	0	21	0	115	<1	1	180	na	0.0	0.4	na	30	na	102	6.7	na	na	0.480	0.000	0.764	0.000	0.020	0.034	3.918	0.000	1.142	0.018	5.9
	3/29/2013	1,906	11	0	91	0	0	0	420	0	0	0	511	37	0	0	0	290	<1	6	280	na	0.1	0.3	na	66	na	296	6.6	na	na	0.381	0.000	1.480	0.000	0.000	0.000	4.330	0.000	0.000	0.000	5.8
REW-6	12/9/2012	149	1	0	16	0	0	0	420	0	510	19	965	31	0	47	<1	<1	<1	<1	100	na	0.1	0.3	na	16	na	2	6.9	na	na											
	1/10/2013	182	1	0	13	0	0	0	320	0	530	17	880	40	0	39	<1	3	<1	2	140	na	0.1	0.3	na	14	na	5	6.8	na	na											
	3/29/2013	169	1	0	17	0	0	0	420	0	510	18	965	33	0	44	0	0	<1	3	120	na	0.0	0.4	na	16	na	3	6.8	na	na											
REW-7	12/9/2012	299	16	0	140	0	0	0	930	0	300	0	1,370	20	0	22	<1	<1	<1	<1	120	na	0.1	0.3	na	15	na	5	6.8	na	na											
	1/10/2013	375	17	0	140	0	2	5	1,000	0	350	12	1,509	22	0	27	<1	7	<1	1	140	na	0.1	<0.05	na	16	na	7	6.7	na	na											
	4/1/2013	309	11	0	130	0	0	0	920	0	300	0	1,350	18	0	23	0	5	<1	<1	120	na	0.1	0.1	na	17	na	5	6.6	na	na											
REW-8	12/9/2012	299	6	0	26	0	0	0	290	0	220	0	536	27	0	42	<1	<1	<1	<1	80	na	0.1	0.1	na	13	na	2	6.9	na	na											
	1/10/2013	292	7	0	44	0	1	2	370	0	340	8	765	27	0	45	<1	2	<1	1	100	na	0.1	0.1	na	18	na	4	6.7	na	na											
	3/28/2013	455	8	0	130	0	0	0	410	0	300	0	840	27	<1	32	<1	29	<1	3	120	na	0.1	0.2	na	16	na	27	6.7	na	na											
REW-12	12/9/2012	31	1	0	10	0	0	0	220	0	150	8	388	23	0	49	<1	<1	<1	<1	80	na	0.1	0.2	na	5	na	1	6.7	na	na											
	1/10/2013	30	1	0	14	0	1	1	270	0	200	10	496	27	0	62	<1	<1	<1	1	100	na	0.1	0.1	na	19	na	2	6.6	na	na											
	3/28/2013	76	3	0	21	0	0	0	277	0	171	0	468	28	0	51	0	5	<1	<1	100	na	0.1	0.2	na	20	na	8	6.7	na	na											
REW-9	12/9/2012	209	0	0	3	0	0	0	6	0	14	0	22	26	0	35	<1	<1	<1	<1	80	na	0.0	0.2	na	7	na	1	6.7	na	na											
	3/28/2013	439	1	0	4	0	0	0	34	0	8	0	46	38	0	29	0	50	<1	<1	160	na	0.0	0.2	na	12	na	48	6.6	na	na											

Well ID	Date Sampled	VOCs Mass Basis (ug/l)												Bio-Parameters (mg/l)															pH	H2 (µM)	CO2 (mg/l)	VOCs Molar Basis (umol/l)										
		Methane	Ethene	Ethane	VC	CA	1,1DCE	1,1DCA	cis 12DCE	1,1,1 TCA	TCE	PCE	Total CVOCs	Chloride	Nitrate	Sulfate	Lactate	Acetate	Proprionate	Butyrate	Alkalinity	Mn	NH3	PO4	Sulfide	Iron	COD	TOC				Ethene	Ethane	VC	CA	1,1DCE	1,1DCA	cis 1, 2 DCE	1,1,1 TCA	TCE	PCE	Total CVOCs
																																28	*28*	*61.5*	*64*	*97*	*99*	*97*	*133*	*131.4*	*165.85*	
REW-10	12/9/2012	22	0	0	0	0	0	0	15	0	6	0	21	55	0	36	0	<1	<1	<1	80	na	0.0	0.1	na	1	na	1	7.5	na	na											
	3/28/2013	23	0	0	0	0	0	0	10	0	4	0	14	66	0	37	0	<1	<1	<1	100	na	0.1	0.1	na	1	na	3	7.1	na	na											
REW-11	12/9/2012	32	1	0	33	0	0	4	930	0	740	22	1,729	18	0	42	0	0	<1	<1	100	na	0.1	0.3	na	6	na	2	6.8	na	na											
	3/29/2013	83	3	0	38	2	2	5	1,198	7	259	0	1,512	19	0	34	0	5	<1	3	120	na	0.2	0.3	na	18	na	3	6.8	na	na											
MW-267M	7/21/2010	na	na	na	24	0	0	0	730	0	500	23	1,277			55												1														
	4/4/2011				17	0	0	1	320	0	240	15	593																													
	4/2/2012				15	0	0	0	280	0	170	0	465																													
	10/9/2012				18	0	0	0	440	0	280	15	753																													
	3/29/2013				20	0	0	0	590	0	350	14	974																													
MW-267S	7/21/2010				17	0	0	0	66	0	330	6	419			57												<1														
	4/4/2011				0	0	1	1	97	0	510	11	620																													
	4/2/2012				0	0	0	0	78	0	470	12	560																													
	10/9/2012				0	0	0	0	83	0	400	0	483																													
	3/29/2013				0	0	0	0	72	0	370	7.6	450																													
REW-4	4/21/2011	0	0	0	0	0	0	0	0	0	0	0	0	2	3	16	0	0	0	0	60	na	0.1	0.1	na	1	na	<0.3	7.2	na	na	0.000	0.000	0.000	0.000	0.000	0.000	0.000	0.000	0.000	0.000	0.0
	7/18/2011	468	6	0	21	0	0	0	379	0	591	20	1,011	40	0	39	0	0	0	0	120	na	0.1	0.1	na	4	na	3	6.6	na	na	0.200	0.000	0.349	0.000	0.000	0.000	3.904	0.000	4.497	0.122	8.9
	10/18/2011	823	2	0	21	0	0	0	400	0	160	0	581	58	0	13	0	37	0	0	180	na	0.2	7.0	na	6	na	91	6.6	na	na	0.074	0.000	0.338	0.000	0.000	0.000	4.128	0.000	1.216	0.000	5.7
	1/5/2012	3,719	3	0	50	0	0	0	380	0	0	0	430	44	0	13	0	46	0	0	220	na	0.3	2.3	na	11	na	68	6.6	na	na	0.122	0.000	0.813	0.000	0.000	0.000	3.918	0.000	0.000	0.000	4.7
	4/3/2012	37	0	0	0	0	0	0	12	1.3	7.7	0	21	3	0	14	0	<1	<1	<1	100	na	0.7	0.2	na	5	na	1	7.0	na		0.000	0.000	0.000	0.000	0.000	0.000	0.124	0.010	0.059	0.000	0.2
	7/23/2012	4,276	15	0	79	0	0	0	310	0	32	0	421	31	0	14	0	168	<1	<1	220	na	2.0	3.1	na	11	na	213	6.7	na	na	0.547	0.000	1.285	0.000	0.000	0.000	3.196	0.000	0.244	0.000	4.7
	10/9/2012	11,012	0	0	18	0	0	0	50	0	0	0	68	13	0	8	0	134	<1	4	180	na	0.1	0.4	na	6	na	167	7.1	na	na	0.000	0.000	0.293	0.000	0.000	0.000	0.515	0.000	0.000	0.000	0.8
	3/28/2013	13,144	8	0	31	0	0	0	41	0	0	0	72	15	<1	12	<1	203	4	6	280	na	0.4	0.1	na	27	na	260	6.7	na	na	0.280	0.000	0.504	0.000	0.000	0.000	0.423	0.000	0.000	0.000	0.9
REW-5	4/21/2011	0	0	0	0	0	0	0	0	0	0	0	0	4	2	14	0	0	0	0	80	na	0.1	0.1	na	2	na	<0.3	6.9	na	na	0.000	0.000	0.000	0.000	0.000	0.000	0.000	0.000	0.000	0.000	0.0
	7/18/2011	168	3	0	31	0	0	0	240	0	218	16	506	25	0	30	0	0	0	0	120	na	0.0	0.1	na	8	na	3	6.5	na	na	0.110	0.000	0.510	0.000	0.000	0.000	2.478	0.000	1.659	0.098	4.7
	10/18/2011	188	2	0	27	0	0	0	246	0	220	0	492	38	0	24	0	7	0	0	120	na	0.0	0.8	na	7	na	18	6.6	na	na	0.076	0.000	0.435	0.000	0.000	0.000	2.535	0.000	1.670	0.000	4.6
	1/5/2012	841	3	0	35	0	0	0	360	0	230	0	625	34	0	28	0	36	0	0	180	na	0.0	0.1	na	9	na	29	6.6	na	na	0.089	0.000	0.569	0.000	0.000	0.000	3.711	0.000	1.750	0.000	6.0
	4/3/2012	385	4	0	54	0	0	0	380	0	140	0	574	39	0	25	<1	49	<1	<1	160	na	0.1	0.3	na	14	na	51	6.6	na	na	0.132	0.000	0.878	0.000	0.000	0.000	3.918	0.000	1.065	0.000	5.9
	7/23/2012	2,661	14	1	60	0	0	0	330	0	39	0	429	41	0	22	<1	97	<1	<1	200	na	0.3	0.1	na	17	na	75	6.5	na	na	0.500	0.034	0.976	0.000	0.000	0.000	3.402	0.000	0.297	0.000	4.7
	10/10/2012	5,226	0	0	60	0	0	0	310	0	61	0	431	33	<1	9	<1	105	<1	<1	260	na	0.4	0.7	na	29	na	96	6.8	na	na	0.000	0.000	0.976	0.000	0.000	0.000	3.196	0.000	0.464	0.000	4.6
	3/28/2013	10,338	11	8	44	0	0	0	290	0	93	0	427	35	<1	14	<1	138	<1	4	300	na	0.9	0.5	na	31	na	113	6.6	na	na	0.403	0.298	0.715	0.000	0.000	0.000	2.990	0.000	0.709	0.000	4.4
																																						0.000				

FIELD DATA RECORD - LOW FLOW GROUNDWATER SAMPLING

PROJECT	**RA-008**	JOB NUMBER	N/A
WELL ID	**MW-563-20130110-01**	DATE	10-Jan-13
TIME	START 0835 END 0910		

Innovative Engineering Solutions, Inc.
25 Spring Street
Walpole Massachusetts 02081

WATER LEVEL/PUMP SETTINGS

MEASUREMENT POINT
- [x] TOP OF WELL RISER
- [ ] TOP OF PROTECTIVE CASING
- [ ] OTHER

PROTECTIVE CASING STICKUP (FROM GROUND): FT

PROTECTIVE CASING/WELL DIFFERENCE: FT

INITIAL DEPTH TO WATER: 6.15 FT

WELL DEPTH: 65.20 FT

WELL DIAMETER: 2 IN

FINAL DEPTH TO WATER: 9.1 FT

SCREEN LENGTH: FT

PID AMBIENT AIR: NA PPM

DRAWDOWN VOLUME: 0.48 GAL
(initial - final x 0.163 {2-inch} or x 0.654 {4-inch})

PID WELL MOUTH: NA PPM

TOTAL VOLUME PURGED: 2.73 GAL
(purge rate (milliliters per minute) x time duration (minutes) x 0.00026 gal/millilter)

WELL INTEGRITY	YES	NO	N/A
CAP	✓		
CASING	✓		
LOCKED		✓	
COLLAR			✓

PURGE DATA

TIME	DEPTH TO WATER (ft)	PURGE RATE (ml/min)	TEMP (deg C)	SPECIFIC CONDUCTANCE (mg/cm)	pH (units)	DISS. O_2 (mg/L)	TURBIDITY (ntu)	REDOX (mv)	COMMENTS
0845	8.95	300	11.66	366	6.79	2.15	N/A	-102.9	
0850	9.10	300	10.94	356	6.74	0.87	N/A	-107.7	
0855	9.10	300	10.40	351	6.74	0.53	N/A	-109.7	
0900	9.10	300	10.34	350	6.73	0.52	N/A	-109.8	
							N/A		
							N/A		
							N/A		
							N/A		
							N/A		
							N/A		
							N/A		
							N/A		
							N/A		sampled @ 0900

EQUIPMENT DOCUMENTATION

TYPE OF PUMP	TYPE OF TUBING	TYPE OF PUMP MATERIAL
GEO 2	SILICON/ POLY	Peristaltic

ANALYTICAL PARAMETERS

	METHOD NUMBER	PRESERVATION METHOD	VOLUME REQUIRED	SAMPLE COLLECTED	SAMPLE RESULTS
[x] TA	8260B	HCL/4 DEG C	3 x 40 ml	[x]	
[x] BTC		HCL/4 DEG C	1 x 40 ml	[x]	
[x] BTC		4 DEG C	4 x 40 ml	[x]	
[x] BTC		4 DEG C	1 x 250 ml	[x]	
[ ]				[ ]	
[ ]				[ ]	
[ ]				[ ]	
[ ]				[ ]	
[ ]				[ ]	
[ ]				[ ]	
[ ]				[ ]	

PURGE WATER DESCRIPTION: very turbid, dark, no sheen, no odor

PURGE WATER CONTAINERIZED: Pour back into well

NUMBER OF BUCKETS GENERATED:

NOTES

SIGNATURE: **DHR**

FIELD DATA RECORD - LOW FLOW GROUNDWATER SAMPLING

PROJECT	**RA-008**	JOB NUMBER	N/A
WELL ID	**REW-1-20130110-01**	DATE	10-Jan-13
TIME	START 0830 END 0905		

Innovative Engineering Solutions, Inc.
25 Spring Street
Walpole Massachusetts 02081

WATER LEVEL/PUMP SETTINGS

MEASUREMENT POINT
- [x] TOP OF WELL RISER
- [ ] TOP OF PROTECTIVE CASING
- [ ] OTHER

PROTECTIVE CASING STICKUP (FROM GROUND): FT

PROTECTIVE CASING/WELL DIFFERENCE: FT

INITIAL DEPTH TO WATER: Note 1 FT

WELL DEPTH: Note 1 FT

WELL DIAMETER: 4 IN

FINAL DEPTH TO WATER: Note 1 FT

SCREEN LENGTH: FT

PID AMBIENT AIR: NA PPM

DRAWDOWN VOLUME: Note 1 GAL
(initial - final x 0.163 {2-inch} or x 0.654 {4-inch})

PID WELL MOUTH: NA PPM

TOTAL VOLUME PURGED: 1.82 GAL
(purge rate (milliliters per minute) x time duration (minutes) x 0.00026 gal/millilter)

WELL INTEGRITY	YES	NO	N/A
CAP	[x]	[ ]	[ ]
CASING	[x]	[ ]	[ ]
LOCKED	[ ]	[x]	[ ]
COLLAR	[ ]	[ ]	[x]

PURGE DATA

TIME	DEPTH TO WATER (ft)	PURGE RATE (ml/min)	TEMP (deg C)	SPECIFIC CONDUCTANCE (mg/cm)	pH (units)	DISS. O_2 (mg/L)	TURBIDITY (ntu)	REDOX (mv)	COMMENTS
0840	Note 1	200	9.45	245	6.82	0.30	N/A	-77.8	DupX
0845	Note 1	200	9.48	239	6.77	0.22	N/A	-83.3	
0850	Note 1	200	9.63	237	6.76	0.21	N/A	-86.9	
0855	Note 1	200	9.64	237	6.76	0.20	N/A	-89	
							N/A		
							N/A		
							N/A		
							N/A		
							N/A		
							N/A		
							N/A		
							N/A		
							N/A		sampled @ 0855

EQUIPMENT DOCUMENTATION

TYPE OF PUMP	TYPE OF TUBING	TYPE OF PUMP MATERIAL
GEO 2	SILICON/ POLY	Peristaltic

ANALYTICAL PARAMETERS

	METHOD NUMBER	PRESERVATION METHOD	VOLUME REQUIRED	SAMPLE COLLECTED	SAMPLE RESULTS
[x] TA	8260B	HCL/4 DEG C	3 x 40 ml	[x]	
[x] BTC		HCL/4 DEG C	1 x 40 ml	[x]	
[x] BTC		4 DEG C	4 x 40 ml	[x]	
[x] BTC		4 DEG C	1 x 250 ml	[x]	
[ ]				[ ]	
[ ]				[ ]	
[ ]				[ ]	
[ ]				[ ]	
[ ]				[ ]	
[ ]				[ ]	
[ ]				[ ]	

PURGE WATER DESCRIPTION: clear, slight bio odor

PURGE WATER CONTAINERIZED: Pour back into well

NUMBER OF BUCKETS GENERATED:

NOTES
Note 1: pump in well and running

DupX

SIGNATURE: **DAJ**

FIELD DATA RECORD - LOW FLOW GROUNDWATER SAMPLING

PROJECT	**RA-008**	JOB NUMBER	N/A
WELL ID	**REW-6-20130110-01**	DATE	10-Jan-13
TIME	START 0925 END 0955		

Innovative Engineering Solutions, Inc.
25 Spring Street
Walpole Massachusetts 02081

WATER LEVEL/PUMP SETTINGS

MEASUREMENT POINT
- [x] TOP OF WELL RISER
- [ ] TOP OF PROTECTIVE CASING
- [ ] OTHER

PROTECTIVE CASING STICKUP (FROM GROUND): FT

PROTECTIVE CASING/WELL DIFFERENCE: FT

INITIAL DEPTH TO WATER: Note 1 FT

WELL DEPTH: Note 1 FT

WELL DIAMETER: 4 IN

FINAL DEPTH TO WATER: Note 1 FT

SCREEN LENGTH: FT

PID AMBIENT AIR: NA PPM

DRAWDOWN VOLUME: Note 1 GAL
(initial - final x 0.163 {2-inch} or x 0.654 {4-inch})

PID WELL MOUTH: NA PPM

TOTAL VOLUME PURGED: 1.56 GAL
(purge rate (milliliters per minute) x time duration (minutes) x 0.00026 gal/millilter)

WELL INTEGRITY	YES	NO	N/A
CAP	✓		
CASING	✓		
LOCKED		✓	
COLLAR			✓

PURGE DATA

TIME	DEPTH TO WATER (ft)	PURGE RATE (ml/min)	TEMP (deg C)	SPECIFIC CONDUCTANCE (mg/cm)	pH (units)	DISS. O_2 (mg/L)	TURBIDITY (ntu)	REDOX (mv)	COMMENTS
0935	Note 1	200	9.67	272	6.82	0.22	N/A	-107.9	
0940	Note 1	200	9.58	276	6.84	0.19	N/A	-111.8	
0945	Note 1	200	9.76	279	6.86	0.20	N/A	-113.7	
0950	Note 1	200	9.73	278	6.87	0.21	N/A	-113.4	
							N/A		
							N/A		
							N/A		
							N/A		
							N/A		
							N/A		
							N/A		
							N/A		
							N/A		sampled @ 0950

EQUIPMENT DOCUMENTATION

TYPE OF PUMP	TYPE OF TUBING	TYPE OF PUMP MATERIAL
GEO 2	SILICON/ POLY	Peristaltic

ANALYTICAL PARAMETERS

	METHOD NUMBER	PRESERVATION METHOD	VOLUME REQUIRED	SAMPLE COLLECTED	SAMPLE RESULTS
[x] TA	8260B	HCL/4 DEG C	3 x 40 ml	[x]	
[x] BTC		HCL/4 DEG C	1 x 40 ml	[x]	
[x] BTC		4 DEG C	4 x 40 ml	[x]	
[x] BTC		4 DEG C	1 x 250 ml	[x]	
[ ]				[ ]	
[ ]				[ ]	
[ ]				[ ]	
[ ]				[ ]	
[ ]				[ ]	
[ ]				[ ]	
[ ]				[ ]	

PURGE WATER DESCRIPTION: clear, slight bio odor

PURGE WATER CONTAINERIZED: Pour back into well

NUMBER OF BUCKETS GENERATED:

NOTES
Note 1: pump in well and running

SIGNATURE: **DAJ**

FIELD DATA RECORD - LOW FLOW GROUNDWATER SAMPLING

PROJECT	**RA-008**	JOB NUMBER	N/A
WELL ID	**REW-7-20130110-01**	DATE	10-Jan-13
TIME	START 1045 END 1120		

Innovative Engineering Solutions, Inc.
25 Spring Street
Walpole Massachusetts 02081

WATER LEVEL/PUMP SETTINGS

MEASUREMENT POINT
- [x] TOP OF WELL RISER
- [ ] TOP OF PROTECTIVE CASING
- [ ] OTHER

PROTECTIVE CASING STICKUP (FROM GROUND): FT

PROTECTIVE CASING/WELL DIFFERENCE: FT

INITIAL DEPTH TO WATER: Note 1 FT

WELL DEPTH: Note 1 FT

WELL DIAMETER: 4 IN

FINAL DEPTH TO WATER: Note 1 FT

SCREEN LENGTH: FT

PID AMBIENT AIR: NA PPM

DRAWDOWN VOLUME: Note 1 GAL
(initial - final x 0.163 {2-inch} or x 0.654 {4-inch})

PID WELL MOUTH: NA PPM

TOTAL VOLUME PURGED: 1.82 GAL
(purge rate (milliliters per minute) x time duration (minutes) x 0.00026 gal/millilter)

WELL INTEGRITY	YES	NO	N/A
CAP	✓		
CASING	✓		
LOCKED		✓	
COLLAR			✓

PURGE DATA

TIME	DEPTH TO WATER (ft)	PURGE RATE (ml/min)	TEMP (deg C)	SPECIFIC CONDUCTANCE (mg/cm)	pH (units)	DISS. O_2 (mg/L)	TURBIDITY (ntu)	REDOX (mv)	COMMENTS
1055	Note 1	200	10.26	228	6.72	0.21	N/A	-81.6	
1100	Note 1	200	10.35	227	6.73	0.18	N/A	-87.4	
1105	Note 1	200	10.38	218	6.72	0.19	N/A	-87.9	
1110	Note 1	200	10.27	217	6.72	0.18	N/A	-89.3	
							N/A		
							N/A		
							N/A		
							N/A		
							N/A		
							N/A		
							N/A		
							N/A		
							N/A		sampled @ 1110

EQUIPMENT DOCUMENTATION

TYPE OF PUMP	TYPE OF TUBING	TYPE OF PUMP MATERIAL
GEO 2	SILICON/ POLY	Peristaltic

ANALYTICAL PARAMETERS

	METHOD NUMBER	PRESERVATION METHOD	VOLUME REQUIRED	SAMPLE COLLECTED	SAMPLE RESULTS
[x] TA	8260B	HCL/4 DEG C	3 x 40 ml	[x]	
[x] BTC		HCL/4 DEG C	1 x 40 ml	[x]	
[x] BTC		4 DEG C	4 x 40 ml	[x]	
[x] BTC		4 DEG C	1 x 250 ml	[x]	
[ ]				[ ]	
[ ]				[ ]	
[ ]				[ ]	
[ ]				[ ]	
[ ]				[ ]	
[ ]				[ ]	
[ ]				[ ]	

PURGE WATER DESCRIPTION: clear, no odor

PURGE WATER CONTAINERIZED: Pour back into well

NUMBER OF BUCKETS GENERATED:

NOTES
Note 1: pump in well and running

SIGNATURE: **DAJ**

FIELD DATA RECORD - LOW FLOW GROUNDWATER SAMPLING

PROJECT	**RA-008**	JOB NUMBER	N/A
WELL ID	**REW-8-20130110-01**	DATE	10-Jan-13
TIME	START 1010 END 1040		

Innovative Engineering Solutions, Inc.
25 Spring Street
Walpole Massachusetts 02081

WATER LEVEL/PUMP SETTINGS

MEASUREMENT POINT
- [x] TOP OF WELL RISER
- [ ] TOP OF PROTECTIVE CASING
- [ ] OTHER

PROTECTIVE CASING STICKUP (FROM GROUND): FT

PROTECTIVE CASING/WELL DIFFERENCE: FT

INITIAL DEPTH TO WATER: Note 1 FT

WELL DEPTH: Note 1 FT

WELL DIAMETER: 4 IN

FINAL DEPTH TO WATER: Note 1 FT

SCREEN LENGTH: FT

PID AMBIENT AIR: NA PPM

DRAWDOWN VOLUME: Note 1 GAL
(initial - final x 0.163 {2-inch} or x 0.654 {4-inch})

PID WELL MOUTH: NA PPM

TOTAL VOLUME PURGED: 1.56 GAL
(purge rate (milliliters per minute) x time duration (minutes) x 0.00026 gal/millilter)

WELL INTEGRITY	YES	NO	N/A
CAP	[x]	[ ]	[ ]
CASING	[x]	[ ]	[ ]
LOCKED	[ ]	[x]	[ ]
COLLAR	[ ]	[ ]	[x]

PURGE DATA

TIME	DEPTH TO WATER (ft)	PURGE RATE (ml/min)	TEMP (deg C)	SPECIFIC CONDUCTANCE (mg/cm)	pH (units)	DISS. O_2 (mg/L)	TURBIDITY (ntu)	REDOX (mv)	COMMENTS
1020	Note 1	200	10.02	226	6.85	0.16	N/A	-99.4	
1025	Note 1	200	10.11	226	6.85	0.12	N/A	-102.9	
1030	Note 1	200	10.06	226	6.86	0.13	N/A	-104.5	
1035	Note 1	200	10.15	227	6.86	0.13	N/A	-105.2	
							N/A		
							N/A		
							N/A		
							N/A		
							N/A		
							N/A		
							N/A		
							N/A		
							N/A		sampled @ 1035

EQUIPMENT DOCUMENTATION

TYPE OF PUMP	TYPE OF TUBING	TYPE OF PUMP MATERIAL
GEO 2	SILICON/ POLY	Peristaltic

ANALYTICAL PARAMETERS

	METHOD NUMBER	PRESERVATION METHOD	VOLUME REQUIRED	SAMPLE COLLECTED	SAMPLE RESULTS
[x] TA	8260B	HCL/4 DEG C	3 x 40 ml	[x]	
[x] BTC		HCL/4 DEG C	1 x 40 ml	[x]	
[x] BTC		4 DEG C	4 x 40 ml	[x]	
[x] BTC		4 DEG C	1 x 250 ml	[x]	
[ ]				[ ]	
[ ]				[ ]	
[ ]				[ ]	
[ ]				[ ]	
[ ]				[ ]	
[ ]				[ ]	
[ ]				[ ]	

PURGE WATER DESCRIPTION: clear, no odor

PURGE WATER CONTAINERIZED: Pour back into well

NUMBER OF BUCKETS GENERATED:

NOTES
Note 1: pump in well and running

SIGNATURE: **DAJ**

FIELD DATA RECORD - LOW FLOW GROUNDWATER SAMPLING

PROJECT	**RA-008**	JOB NUMBER	N/A
WELL ID	**REW-8-20130110-01**	DATE	10-Jan-13
TIME	START 1010 END 1040		

Innovative Engineering Solutions, Inc.
25 Spring Street
Walpole Massachusetts 02081

WATER LEVEL/PUMP SETTINGS

MEASUREMENT POINT
- [x] TOP OF WELL RISER
- [ ] TOP OF PROTECTIVE CASING
- [ ] OTHER

PROTECTIVE CASING STICKUP (FROM GROUND): FT

PROTECTIVE CASING/WELL DIFFERENCE: FT

INITIAL DEPTH TO WATER: Note 1 FT

WELL DEPTH: Note 1 FT

WELL DIAMETER: 4 IN

FINAL DEPTH TO WATER: Note 1 FT

SCREEN LENGTH: FT

PID AMBIENT AIR: NA PPM

DRAWDOWN VOLUME: Note 1 GAL
(initial - final x 0.163 {2-inch} or x 0.654 {4-inch})

PID WELL MOUTH: NA PPM

TOTAL VOLUME PURGED: 1.56 GAL
(purge rate (milliliters per minute) x time duration (minutes) x 0.00026 gal/millilter)

WELL INTEGRITY	YES	NO	N/A
CAP	[x]	[ ]	[ ]
CASING	[x]	[ ]	[ ]
LOCKED	[ ]	[x]	[ ]
COLLAR	[ ]	[ ]	[x]

PURGE DATA

TIME	DEPTH TO WATER (ft)	PURGE RATE (ml/min)	TEMP (deg C)	SPECIFIC CONDUCTANCE (mg/cm)	pH (units)	DISS. O_2 (mg/L)	TURBIDITY (ntu)	REDOX (mv)	COMMENTS
1020	Note 1	200	10.02	226	6.85	0.16	N/A	-99.4	
1025	Note 1	200	10.11	226	6.85	0.12	N/A	-102.9	
1030	Note 1	200	10.06	226	6.86	0.13	N/A	-104.5	
1035	Note 1	200	10.15	227	6.86	0.13	N/A	-105.2	
							N/A		
							N/A		
							N/A		
							N/A		
							N/A		
							N/A		
							N/A		
							N/A		
							N/A		sampled @ 1035

EQUIPMENT DOCUMENTATION

TYPE OF PUMP	TYPE OF TUBING	TYPE OF PUMP MATERIAL
GEO 2	SILICON/ POLY	Peristaltic

ANALYTICAL PARAMETERS

	METHOD NUMBER	PRESERVATION METHOD	VOLUME REQUIRED	SAMPLE COLLECTED	SAMPLE RESULTS
[x] TA	8260B	HCL/4 DEG C	3 x 40 ml	[x]	
[x] BTC		HCL/4 DEG C	1 x 40 ml	[x]	
[x] BTC		4 DEG C	4 x 40 ml	[x]	
[x] BTC		4 DEG C	1 x 250 ml	[x]	
[ ]				[ ]	
[ ]				[ ]	
[ ]				[ ]	
[ ]				[ ]	
[ ]				[ ]	
[ ]				[ ]	
[ ]				[ ]	

PURGE WATER DESCRIPTION: clear, moderate bio odor

PURGE WATER CONTAINERIZED: Pour back into well

NUMBER OF BUCKETS GENERATED:

NOTES
Note 1: pump in well and running

SIGNATURE: **DAJ**

FIELD DATA RECORD - LOW FLOW GROUNDWATER SAMPLING

PROJECT	**RA-008**	JOB NUMBER	N/A
WELL ID	**MW-261S-20130110-01**	DATE	10-Jan-13
TIME	START 1010 END 1045		

Innovative Engineering Solutions, Inc.
25 Spring Street
Walpole Massachusetts 02081

WATER LEVEL/PUMP SETTINGS

MEASUREMENT POINT
- [x] TOP OF WELL RISER
- [ ] TOP OF PROTECTIVE CASING
- [ ] OTHER

PROTECTIVE CASING STICKUP (FROM GROUND): FT

PROTECTIVE CASING/WELL DIFFERENCE: FT

INITIAL DEPTH TO WATER: 10.2 FT

WELL DEPTH: 24.10 FT

WELL DIAMETER: 2 IN

FINAL DEPTH TO WATER: 11.22 FT

SCREEN LENGTH: FT

PID AMBIENT AIR: NA PPM

DRAWDOWN VOLUME: 0.16 GAL
(initial - final x 0.163 {2-inch} or x 0.654 {4-inch})

PID WELL MOUTH: NA PPM

TOTAL VOLUME PURGED: 2.73 GAL
(purge rate (milliliters per minute) x time duration (minutes) x 0.00026 gal/millilter)

WELL INTEGRITY	YES	NO	N/A
CAP	[x]	[ ]	[ ]
CASING	[x]	[ ]	[ ]
LOCKED	[ ]	[x]	[ ]
COLLAR	[ ]	[ ]	[x]

PURGE DATA

TIME	DEPTH TO WATER (ft)	PURGE RATE (ml/min)	TEMP (deg C)	SPECIFIC CONDUCTANCE (mg/cm)	pH (units)	DISS. O_2 (mg/L)	TURBIDITY (ntu)	REDOX (mv)	COMMENTS
1020	11.22	300	10.19	513	6.70	0.43	N/A	-122.8	
1025	11.22	300	10.26	514	6.70	0.36	N/A	-116.2	
1030	11.22	300	10.26	515	6.70	0.31	N/A	-108.6	
1035	11.22	300	10.29	515	6.68	0.24	N/A	-107.1	
							N/A		
							N/A		
							N/A		
							N/A		
							N/A		
							N/A		
							N/A		
							N/A		
							N/A		sampled @ 1035

EQUIPMENT DOCUMENTATION

TYPE OF PUMP	TYPE OF TUBING	TYPE OF PUMP MATERIAL
GEO 2	SILICON/ POLY	Peristaltic

ANALYTICAL PARAMETERS

	METHOD NUMBER	PRESERVATION METHOD	VOLUME REQUIRED	SAMPLE COLLECTED	SAMPLE RESULTS
[x] TA	8260B	HCL/4 DEG C	3 x 40 ml	[x]	
[x] BTC		HCL/4 DEG C	1 x 40 ml	[x]	
[x] BTC		4 DEG C	4 x 40 ml	[x]	
[x] BTC		4 DEG C	1 x 250 ml	[x]	
[ ]				[ ]	
[ ]				[ ]	
[ ]				[ ]	
[ ]				[ ]	
[ ]				[ ]	
[ ]				[ ]	
[ ]				[ ]	

PURGE WATER DESCRIPTION: clear, no sheen, slight odor

PURGE WATER CONTAINERIZED: Pour back into well

NUMBER OF BUCKETS GENERATED:

NOTES

SIGNATURE: **DHR**

FIELD DATA RECORD - LOW FLOW GROUNDWATER SAMPLING

PROJECT	**RA-008**	JOB NUMBER	N/A
WELL ID	**MW-265M-20130110-01**	DATE	10-Jan-13
TIME	START 1145 END 1220		

Innovative Engineering Solutions, Inc.
25 Spring Street
Walpole Massachusetts 02081

WATER LEVEL/PUMP SETTINGS

MEASUREMENT POINT
- [x] TOP OF WELL RISER
- [ ] TOP OF PROTECTIVE CASING
- [ ] OTHER

PROTECTIVE CASING STICKUP (FROM GROUND): FT

PROTECTIVE CASING/WELL DIFFERENCE: FT

INITIAL DEPTH TO WATER: 9.8 FT

WELL DEPTH: 48.20 FT

WELL DIAMETER: 2 IN

FINAL DEPTH TO WATER: 10.3 FT

SCREEN LENGTH: FT

PID AMBIENT AIR: NA PPM

DRAWDOWN VOLUME: 0.08 GAL
(initial - final x 0.163 {2-inch} or x 0.654 {4-inch})

PID WELL MOUTH: NA PPM

WELL INTEGRITY	YES	NO	N/A
CAP	[x]	[ ]	[ ]
CASING	[x]	[ ]	[ ]
LOCKED	[ ]	[x]	[ ]
COLLAR	[ ]	[ ]	[x]

TOTAL VOLUME PURGED: 2.73 GAL
(purge rate (milliliters per minute) x time duration (minutes) x 0.00026 gal/millilter)

PURGE DATA

TIME	DEPTH TO WATER (ft)	PURGE RATE (ml/min)	TEMP (deg C)	SPECIFIC CONDUCTANCE (mg/cm)	pH (units)	DISS. O_2 (mg/L)	TURBIDITY (ntu)	REDOX (mv)	COMMENTS
1155	10.29	300	10.53	835	6.65	0.29	N/A	-119.1	
1200	10.30	300	10.55	875	6.67	0.25	N/A	-123.1	
1205	10.30	300	10.55	916	6.70	0.20	N/A	-125.1	
1210	10.30	300	10.55	924	6.70	0.19	N/A	-124.8	
							N/A		
							N/A		
							N/A		
							N/A		
							N/A		
							N/A		
							N/A		
							N/A		
							N/A		sampled @ 1210

EQUIPMENT DOCUMENTATION

TYPE OF PUMP	TYPE OF TUBING	TYPE OF PUMP MATERIAL
GEO 2	SILICON/ POLY	Peristaltic

ANALYTICAL PARAMETERS

	METHOD NUMBER	PRESERVATION METHOD	VOLUME REQUIRED	SAMPLE COLLECTED	SAMPLE RESULTS
[x] TA	8260B	HCL/4 DEG C	3 x 40 ml	[x]	
[x] BTC		HCL/4 DEG C	1 x 40 ml	[x]	
[x] BTC		4 DEG C	4 x 40 ml	[x]	
[x] BTC		4 DEG C	1 x 250 ml	[x]	
[ ]				[ ]	
[ ]				[ ]	
[ ]				[ ]	
[ ]				[ ]	
[ ]				[ ]	
[ ]				[ ]	
[ ]				[ ]	

PURGE WATER DESCRIPTION: clear, no sheen, odor

PURGE WATER CONTAINERIZED: Pour back into well

NUMBER OF BUCKETS GENERATED:

NOTES

SIGNATURE: **DHR**

FIELD DATA RECORD - LOW FLOW GROUNDWATER SAMPLING

PROJECT	**RA-008**	JOB NUMBER	N/A
WELL ID	**MW-552-20130110-01**	DATE	10-Jan-13
TIME	START 0920 END 0955		

Innovative Engineering Solutions, Inc.
25 Spring Street
Walpole Massachusetts 02081

WATER LEVEL/PUMP SETTINGS

MEASUREMENT POINT
- [x] TOP OF WELL RISER
- [ ] TOP OF PROTECTIVE CASING
- [ ] OTHER

PROTECTIVE CASING STICKUP (FROM GROUND): FT

PROTECTIVE CASING/WELL DIFFERENCE: FT

INITIAL DEPTH TO WATER: 8.75 FT

WELL DEPTH: 26.90 FT

WELL DIAMETER: 2 IN

FINAL DEPTH TO WATER: 9.41 FT

SCREEN LENGTH: FT

PID AMBIENT AIR: NA PPM

DRAWDOWN VOLUME: 0.1 GAL
(initial - final x 0.163 {2-inch} or x 0.654 {4-inch})

PID WELL MOUTH: NA PPM

TOTAL VOLUME PURGED: 2.73 GAL
(purge rate (milliliters per minute) x time duration (minutes) x 0.00026 gal/millilter)

WELL INTEGRITY	YES	NO	N/A
CAP	✓		
CASING	✓		
LOCKED		✓	
COLLAR			✓

PURGE DATA

TIME	DEPTH TO WATER (ft)	PURGE RATE (ml/min)	TEMP (deg C)	SPECIFIC CONDUCTANCE (mg/cm)	pH (units)	DISS. O_2 (mg/L)	TURBIDITY (ntu)	REDOX (mv)	COMMENTS
0930	9.41	300	11.34	328	7.17	4.32	N/A	-123.6	
0935	9.41	300	10.99	333	7.09	0.83	N/A	-127.4	
0940	9.41	300	11.01	357	7.01	0.28	N/A	-130	
0945	9.41	300	10.98	357	7.00	0.24	N/A	-130.4	
							N/A		
							N/A		
							N/A		
							N/A		
							N/A		
							N/A		
							N/A		
							N/A		
							N/A		sampled @ 0945

EQUIPMENT DOCUMENTATION

TYPE OF PUMP	TYPE OF TUBING	TYPE OF PUMP MATERIAL
GEO 2	SILICON/ POLY	Peristaltic

ANALYTICAL PARAMETERS

	METHOD NUMBER	PRESERVATION METHOD	VOLUME REQUIRED	SAMPLE COLLECTED	SAMPLE RESULTS
[x] TA	8260B	HCL/4 DEG C	3 x 40 ml	[x]	
[x] BTC		HCL/4 DEG C	1 x 40 ml	[x]	
[x] BTC		4 DEG C	4 x 40 ml	[x]	
[x] BTC		4 DEG C	1 x 250 ml	[x]	
[ ]				[ ]	
[ ]				[ ]	
[ ]				[ ]	
[ ]				[ ]	
[ ]				[ ]	
[ ]				[ ]	
[ ]				[ ]	

PURGE WATER DESCRIPTION: clear, no sheen, odor, some sand/silt in stream

PURGE WATER CONTAINERIZED: Pour back into well

NUMBER OF BUCKETS GENERATED:

NOTES

SIGNATURE: **DHR**

FIELD DATA RECORD - LOW FLOW GROUNDWATER SAMPLING

PROJECT	**RA-008**	JOB NUMBER	N/A
WELL ID	**MW-562-20130110-01**	DATE	10-Jan-13
TIME	START 1055 END 1135		

Innovative Engineering Solutions, Inc.
25 Spring Street
Walpole Massachusetts 02081

WATER LEVEL/PUMP SETTINGS

MEASUREMENT POINT
- [x] TOP OF WELL RISER
- [ ] TOP OF PROTECTIVE CASING
- [ ] OTHER

PROTECTIVE CASING STICKUP (FROM GROUND): FT

PROTECTIVE CASING/WELL DIFFERENCE: FT

INITIAL DEPTH TO WATER: 6.41 FT

WELL DEPTH: 41.40 FT

WELL DIAMETER: 2 IN

FINAL DEPTH TO WATER: 7.35 FT

SCREEN LENGTH: FT

PID AMBIENT AIR: NA PPM

DRAWDOWN VOLUME: 0.15 GAL
(initial - final x 0.163 {2-inch} or x 0.654 {4-inch})

PID WELL MOUTH: NA PPM

TOTAL VOLUME PURGED: 3.12 GAL
(purge rate (milliliters per minute) x time duration (minutes) x 0.00026 gal/millilter)

WELL INTEGRITY	YES	NO	N/A
CAP	[x]	[ ]	[ ]
CASING	[x]	[ ]	[ ]
LOCKED	[ ]	[x]	[ ]
COLLAR	[ ]	[ ]	[x]

PURGE DATA

TIME	DEPTH TO WATER (ft)	PURGE RATE (ml/min)	TEMP (deg C)	SPECIFIC CONDUCTANCE (mg/cm)	pH (units)	DISS. O_2 (mg/L)	TURBIDITY (ntu)	REDOX (mv)	COMMENTS
1105	7.35	300	10.92	895	6.60	0.36	N/A	-124.1	
1110	7.35	300	10.92	884	6.56	0.23	N/A	-124	
1115	7.35	300	11.00	879	6.56	0.19	N/A	-122.8	
1120	7.35	300	11.03	880	6.56	0.19	N/A	-123.2	
							N/A		
							N/A		
							N/A		
							N/A		
							N/A		
							N/A		
							N/A		
							N/A		
							N/A		sampled @ 1125

EQUIPMENT DOCUMENTATION

TYPE OF PUMP	TYPE OF TUBING	TYPE OF PUMP MATERIAL
GEO 2	SILICON/ POLY	Peristaltic

ANALYTICAL PARAMETERS

	METHOD NUMBER	PRESERVATION METHOD	VOLUME REQUIRED	SAMPLE COLLECTED	SAMPLE RESULTS
[x] TA	8260B	HCL/4 DEG C	3 x 40 ml	[x]	
[x] BTC		HCL/4 DEG C	1 x 40 ml	[x]	
[x] BTC		4 DEG C	4 x 40 ml	[x]	
[x] BTC		4 DEG C	1 x 250 ml	[x]	
[ ]				[ ]	
[ ]				[ ]	
[ ]				[ ]	
[ ]				[ ]	
[ ]				[ ]	
[ ]				[ ]	
[ ]				[ ]	

PURGE WATER DESCRIPTION: semi-clear, no sheen, odor

PURGE WATER CONTAINERIZED: Pour back into well

NUMBER OF BUCKETS GENERATED:

NOTES

SIGNATURE: **DHR**

FIELD DATA RECORD - LOW FLOW GROUNDWATER SAMPLING

PROJECT	**RA-008**	JOB NUMBER	N/A
WELL ID	**DEP-19M-20130401-01**	DATE	4/1/13
TIME	START 1220 END 1250		

Innovative Engineering Solutions, Inc.
25 Spring Street
Walpole Massachusetts 02081

WATER LEVEL/PUMP SETTINGS

MEASUREMENT POINT
- [x] TOP OF WELL RISER
- [ ] TOP OF PROTECTIVE CASING
- [ ] OTHER

PROTECTIVE CASING STICKUP (FROM GROUND): FT

PROTECTIVE CASING/WELL DIFFERENCE: FT

INITIAL DEPTH TO WATER: 0.46 FT

WELL DEPTH: 39.80 FT

WELL DIAMETER: 1/2 IN

FINAL DEPTH TO WATER: Note 1 FT

SCREEN LENGTH: FT

PID AMBIENT AIR: NA PPM

DRAWDOWN VOLUME: Note 1 GAL
(initial - final x 0.163 {2-inch} or x 0.654 {4-inch})

PID WELL MOUTH: NA PPM

TOTAL VOLUME PURGED: 0.78 GAL
(purge rate (milliliters per minute) x time duration (minutes) x 0.00026 gal/millilter)

WELL INTEGRITY	YES	NO	N/A
CAP	✓		
CASING	✓		
LOCKED		✓	
COLLAR			✓

PURGE DATA

TIME	DEPTH TO WATER (ft)	PURGE RATE (ml/min)	TEMP (deg C)	SPECIFIC CONDUCTANCE (mg/cm)	pH (units)	DISS. O_2 (mg/L)	TURBIDITY (ntu)	REDOX (mv)	COMMENTS
1225	Note 1	100	16.42	104	9.94	0.55	N/A	-259	
1230	Note 1	100	10.45	86	10.02	0.28	N/A	-286.9	
1235	Note 1	100	11.03	82	10.04	0.26	N/A	-303.3	
1240	Note 1	100	11.26	81	9.99	0.24	N/A	-307.1	
							N/A		
							N/A		
							N/A		
							N/A		
							N/A		
							N/A		
							N/A		
							N/A		
							N/A		sampled @ 1240

EQUIPMENT DOCUMENTATION

TYPE OF PUMP	TYPE OF TUBING	TYPE OF PUMP MATERIAL
GEO 2	SILICON/ POLY	Peristaltic

ANALYTICAL PARAMETERS

	METHOD NUMBER	PRESERVATION METHOD	VOLUME REQUIRED	SAMPLE COLLECTED	SAMPLE RESULTS
[x] TA	8260B	HCL/4 DEG C	3 x 40 ml	[x]	
[ ]				[ ]	
[ ]				[ ]	
[ ]				[ ]	
[ ]				[ ]	
[ ]				[ ]	
[ ]				[ ]	
[ ]				[ ]	
[ ]				[ ]	
[ ]				[ ]	
[ ]				[ ]	

PURGE WATER DESCRIPTION: gray, no odor

PURGE WATER CONTAINERIZED: Pour back into well

NUMBER OF BUCKETS GENERATED:

NOTES
Note 1: can not fit tubing and level probe in well at same time

SIGNATURE: **DAJ**

FIELD DATA RECORD - LOW FLOW GROUNDWATER SAMPLING

PROJECT	**RA-008**	JOB NUMBER	N/A
WELL ID	**DEP-21-20130401-01**	DATE	1-Apr-13
TIME	START 1135 END 1205		

Innovative Engineering Solutions, Inc.
25 Spring Street
Walpole Massachusetts 02081

WATER LEVEL/PUMP SETTINGS

MEASUREMENT POINT
- [x] TOP OF WELL RISER
- [ ] TOP OF PROTECTIVE CASING
- [ ] OTHER

PROTECTIVE CASING STICKUP (FROM GROUND): FT

PROTECTIVE CASING/WELL DIFFERENCE: FT

INITIAL DEPTH TO WATER: 0 FT

WELL DEPTH: 49.61 FT

WELL DIAMETER: 1/2 IN

FINAL DEPTH TO WATER: Note 1 FT

SCREEN LENGTH: FT

PID AMBIENT AIR: NA PPM

DRAWDOWN VOLUME: Note 1 GAL
(initial - final x 0.163 {2-inch} or x 0.654 {4-inch})

PID WELL MOUTH: NA PPM

TOTAL VOLUME PURGED: 0.78 GAL
(purge rate (milliliters per minute) x time duration (minutes) x 0.00026 gal/millilter)

WELL INTEGRITY	YES	NO	N/A
CAP	✓		
CASING	✓		
LOCKED		✓	
COLLAR			✓

PURGE DATA

TIME	DEPTH TO WATER (ft)	PURGE RATE (ml/min)	TEMP (deg C)	SPECIFIC CONDUCTANCE (mg/cm)	pH (units)	DISS. O_2 (mg/L)	TURBIDITY (ntu)	REDOX (mv)	COMMENTS
1145	Note 1	100	10.99	174	7.45	0.52	N/A	-179	
1150	Note 1	100	11.62	178	7.48	0.56	N/A	-175.9	
1155	Note 1	100	12.33	182	7.49	0.54	N/A	-173.2	
1200	Note 1	100	14.22	190	7.50	0.53	N/A	-171.6	
							N/A		
							N/A		
							N/A		
							N/A		
							N/A		
							N/A		
							N/A		
							N/A		
							N/A		sampled @ 1200

EQUIPMENT DOCUMENTATION

TYPE OF PUMP	TYPE OF TUBING	TYPE OF PUMP MATERIAL
GEO 2	SILICON/ POLY	Peristaltic

ANALYTICAL PARAMETERS

	METHOD NUMBER	PRESERVATION METHOD	VOLUME REQUIRED	SAMPLE COLLECTED	SAMPLE RESULTS
[x] TA	8260B	HCL/4 DEG C	3 x 40 ml	[x]	
[ ]				[ ]	
[ ]				[ ]	
[ ]				[ ]	
[ ]				[ ]	
[ ]				[ ]	
[ ]				[ ]	
[ ]				[ ]	
[ ]				[ ]	
[ ]				[ ]	
[ ]				[ ]	

PURGE WATER DESCRIPTION: clear, no odor

PURGE WATER CONTAINERIZED: Pour back into well

NUMBER OF BUCKETS GENERATED:

NOTES
Note 1: can not fit tubing and level probe in well at same time

SIGNATURE: **DAJ**

FIELD DATA RECORD - LOW FLOW GROUNDWATER SAMPLING

PROJECT	**RA-008**	JOB NUMBER	N/A
WELL ID	**MW-261S-20130401-01**	DATE	1-Apr-13
TIME	START 0810 END 0850		

Innovative Engineering Solutions, Inc.
25 Spring Street
Walpole Massachusetts 02081

WATER LEVEL/PUMP SETTINGS

MEASUREMENT POINT
- [x] TOP OF WELL RISER
- [ ] TOP OF PROTECTIVE CASING
- [ ] OTHER

PROTECTIVE CASING STICKUP (FROM GROUND): FT

PROTECTIVE CASING/WELL DIFFERENCE: FT

INITIAL DEPTH TO WATER: 7.68 FT

WELL DEPTH: 24.40 FT

WELL DIAMETER: 2 IN

FINAL DEPTH TO WATER: 8.96 FT

SCREEN LENGTH: FT

PID AMBIENT AIR: NA PPM

DRAWDOWN VOLUME: 0.2 GAL
(initial - final x 0.163 {2-inch} or x 0.654 {4-inch})

PID WELL MOUTH: NA PPM

WELL INTEGRITY	YES	NO	N/A
CAP	☑	☐	☐
CASING	☑	☐	☐
LOCKED	☐	☑	☐
COLLAR	☐	☐	☑

TOTAL VOLUME PURGED: 2.08 GAL
(purge rate (milliliters per minute) x time duration (minutes) x 0.00026 gal/millilter)

PURGE DATA

TIME	DEPTH TO WATER (ft)	PURGE RATE (ml/min)	TEMP (deg C)	SPECIFIC CONDUCTANCE (mg/cm)	pH (units)	DISS. O_2 (mg/L)	TURBIDITY (ntu)	REDOX (mv)	COMMENTS
0820	9.43	200	8.85	615	6.63	0.81	N/A	-118.7	
0825	9.08	200	8.41	606	6.63	0.84	N/A	-118.6	
0830	9.04	200	8.85	612	6.61	0.86	N/A	-116.8	
0835	8.96	200	9.18	617	6.60	0.83	N/A	-117.3	
							N/A		
							N/A		
							N/A		
							N/A		
							N/A		
							N/A		
							N/A		
							N/A		
							N/A		sampled @ 0835

EQUIPMENT DOCUMENTATION

TYPE OF PUMP	TYPE OF TUBING	TYPE OF PUMP MATERIAL
GEO 2	SILICON/ POLY	Peristaltic

ANALYTICAL PARAMETERS

	METHOD NUMBER	PRESERVATION METHOD	VOLUME REQUIRED	SAMPLE COLLECTED	SAMPLE RESULTS
☑ TA	8260B	HCL/4 DEG C	3 x 40 ml	☑	
☑ TA	8260-SIMS	HCL/4 DEG C	3 x 40 ml	☑	
☑ BTC		HCL/4 DEG C	1 x 40 ml	☑	
☑ BTC		4 DEG C	4 x 40 ml	☑	
☑ BTC		4 DEG C	1 x 250 ml	☑	
☐				☐	
☐				☐	
☐				☐	
☐				☐	
☐				☐	
☐				☐	

PURGE WATER DESCRIPTION: clear, no odor

PURGE WATER CONTAINERIZED: Pour back into well

NUMBER OF BUCKETS GENERATED:

NOTES

SIGNATURE: **DAJ**

FIELD DATA RECORD - LOW FLOW GROUNDWATER SAMPLING

PROJECT	**RA-008**	JOB NUMBER	N/A
WELL ID	**MW-263M-20130401-01**	DATE	1-Apr-13
TIME	START 1025 END 1100		

Innovative Engineering Solutions, Inc.
25 Spring Street
Walpole Massachusetts 02081

WATER LEVEL/PUMP SETTINGS

MEASUREMENT POINT
- [x] TOP OF WELL RISER
- [ ] TOP OF PROTECTIVE CASING
- [ ] OTHER

PROTECTIVE CASING STICKUP (FROM GROUND): FT

PROTECTIVE CASING/WELL DIFFERENCE: FT

INITIAL DEPTH TO WATER: 7.44 FT

WELL DEPTH: 52.68 FT

WELL DIAMETER: 2 IN

FINAL DEPTH TO WATER: 7.44 FT

SCREEN LENGTH: FT

PID AMBIENT AIR: NA PPM

DRAWDOWN VOLUME: 0 GAL
(initial - final x 0.163 {2-inch} or x 0.654 {4-inch})

PID WELL MOUTH: NA PPM

TOTAL VOLUME PURGED: 1.82 GAL
(purge rate (milliliters per minute) x time duration (minutes) x 0.00026 gal/millilter)

WELL INTEGRITY	YES	NO	N/A
CAP	✓		
CASING	✓		
LOCKED		✓	
COLLAR			✓

PURGE DATA

TIME	DEPTH TO WATER (ft)	PURGE RATE (ml/min)	TEMP (deg C)	SPECIFIC CONDUCTANCE (mg/cm)	pH (units)	DISS. O_2 (mg/L)	TURBIDITY (ntu)	REDOX (mv)	COMMENTS
1035	7.48	200	8.98	338	7.32	0.38	N/A	-137.6	DupX3-20130401-01
1040	7.46	200	8.87	333	7.40	0.30	N/A	-133.8	
1045	7.44	200	8.87	329	7.38	0.32	N/A	-138.4	
1055	7.44	200	8.92	337	7.39	0.32	N/A	-141.3	
							N/A		
							N/A		
							N/A		
							N/A		
							N/A		
							N/A		
							N/A		
							N/A		
							N/A		sampled @ 1055

EQUIPMENT DOCUMENTATION

TYPE OF PUMP	TYPE OF TUBING	TYPE OF PUMP MATERIAL
GEO 2	SILICON/ POLY	Peristaltic

ANALYTICAL PARAMETERS

	METHOD NUMBER	PRESERVATION METHOD	VOLUME REQUIRED	SAMPLE COLLECTED	SAMPLE RESULTS
[x] TA	8260B	HCL/4 DEG C	3 x 40 ml	[x]	
[ ]				[ ]	
[ ]				[ ]	
[ ]				[ ]	
[ ]				[ ]	
[ ]				[ ]	
[ ]				[ ]	
[ ]				[ ]	
[ ]				[ ]	
[ ]				[ ]	
[ ]				[ ]	

PURGE WATER DESCRIPTION: clear, no odor

PURGE WATER CONTAINERIZED: Pour back into well

NUMBER OF BUCKETS GENERATED:

NOTES

DupX3-20130401-01

SIGNATURE: **DAJ**

FIELD DATA RECORD - LOW FLOW GROUNDWATER SAMPLING

PROJECT	**RA-008**	JOB NUMBER	N/A
WELL ID	**MW-264M-20130401-01**	DATE	1-Apr-13
TIME	START 0945 END 1025		

Innovative Engineering Solutions, Inc.
25 Spring Street
Walpole Massachusetts 02081

WATER LEVEL/PUMP SETTINGS

MEASUREMENT POINT
- [x] TOP OF WELL RISER
- [ ] TOP OF PROTECTIVE CASING
- [ ] OTHER

PROTECTIVE CASING STICKUP (FROM GROUND): FT

PROTECTIVE CASING/WELL DIFFERENCE: FT

INITIAL DEPTH TO WATER: 5.41 FT

WELL DEPTH: 47.30 FT

WELL DIAMETER: 2 IN

FINAL DEPTH TO WATER: 5.71 FT

SCREEN LENGTH: FT

PID AMBIENT AIR: NA PPM

DRAWDOWN VOLUME: 0.05 GAL
(initial - final x 0.163 {2-inch} or x 0.654 {4-inch})

PID WELL MOUTH: NA PPM

TOTAL VOLUME PURGED: 2.08 GAL
(purge rate (milliliters per minute) x time duration (minutes) x 0.00026 gal/millilter)

WELL INTEGRITY	YES	NO	N/A
CAP	✓		
CASING	✓		
LOCKED		✓	
COLLAR			✓

PURGE DATA

TIME	DEPTH TO WATER (ft)	PURGE RATE (ml/min)	TEMP (deg C)	SPECIFIC CONDUCTANCE (mg/cm)	pH (units)	DISS. O_2 (mg/L)	TURBIDITY (ntu)	REDOX (mv)	COMMENTS
1000	5.71	200	9.99	144	6.60	7.65	N/A	163.5	
1005	5.71	200	10.13	145	6.51	7.12	N/A	102.1	
1010	5.71	200	10.13	145	6.51	7.17	N/A	100.7	
1015	5.71	200	10.12	145	6.50	7.22	N/A	102.5	
							N/A		
							N/A		
							N/A		
							N/A		
							N/A		
							N/A		
							N/A		
							N/A		
							N/A		sampled @ 1020

EQUIPMENT DOCUMENTATION

TYPE OF PUMP	TYPE OF TUBING	TYPE OF PUMP MATERIAL
GEO 2	SILICON/ POLY	Peristaltic

ANALYTICAL PARAMETERS

	METHOD NUMBER	PRESERVATION METHOD	VOLUME REQUIRED	SAMPLE COLLECTED	SAMPLE RESULTS
[x] TA	8260B	HCL/4 DEG C	3 x 40 ml	[x]	
[ ]				[ ]	
[ ]				[ ]	
[ ]				[ ]	
[ ]				[ ]	
[ ]				[ ]	
[ ]				[ ]	
[ ]				[ ]	
[ ]				[ ]	
[ ]				[ ]	
[ ]				[ ]	

PURGE WATER DESCRIPTION

PURGE WATER CONTAINERIZED: Pour back into well

NUMBER OF BUCKETS GENERATED

NOTES

SIGNATURE: **GH**

FIELD DATA RECORD - LOW FLOW GROUNDWATER SAMPLING

PROJECT	**RA-008**	JOB NUMBER	N/A
WELL ID	**MW-265S-20130401-01**	DATE	1-Apr-13
TIME	START 1030 END 1105		

Innovative Engineering Solutions, Inc.
25 Spring Street
Walpole Massachusetts 02081

WATER LEVEL/PUMP SETTINGS

MEASUREMENT POINT
- [x] TOP OF WELL RISER
- [ ] TOP OF PROTECTIVE CASING
- [ ] OTHER

PROTECTIVE CASING STICKUP (FROM GROUND): FT

PROTECTIVE CASING/WELL DIFFERENCE: FT

INITIAL DEPTH TO WATER	7.2 FT	WELL DEPTH	21.00 FT	WELL DIAMETER	2 IN
FINAL DEPTH TO WATER	7.41 FT	SCREEN LENGTH	FT	PID AMBIENT AIR	NA PPM
DRAWDOWN VOLUME	0.03 GAL			PID WELL MOUTH	NA PPM
TOTAL VOLUME PURGED	1.82 GAL				

(initial - final x 0.163 {2-inch} or x 0.654 {4-inch})

(purge rate (milliliters per minute) x time duration (minutes) x 0.00026 gal/millilter)

WELL INTEGRITY	YES	NO	N/A
CAP	✓		
CASING	✓		
LOCKED		✓	
COLLAR			✓

PURGE DATA

TIME	DEPTH TO WATER (ft)	PURGE RATE (ml/min)	TEMP (deg C)	SPECIFIC CONDUCTANCE (mg/cm)	pH (units)	DISS. O_2 (mg/L)	TURBIDITY (ntu)	REDOX (mv)	COMMENTS
1040	7.34	200	7.70	73	5.60	4.60	N/A	194.8	
1045	7.40	200	7.51	72	5.47	4.59	N/A	205.3	
1050	7.40	200	7.36	72	5.48	4.63	N/A	205.9	
1055	7.41	200	7.35	72	5.48	4.64	N/A	206.5	
							N/A		
							N/A		
							N/A		
							N/A		
							N/A		
							N/A		
							N/A		
							N/A		
							N/A		sampled @ 1100

EQUIPMENT DOCUMENTATION

TYPE OF PUMP	TYPE OF TUBING	TYPE OF PUMP MATERIAL
GEO 2	SILICON/ POLY	Peristaltic

ANALYTICAL PARAMETERS

	METHOD NUMBER	PRESERVATION METHOD	VOLUME REQUIRED	SAMPLE COLLECTED	SAMPLE RESULTS
[x] TA	8260B	HCL/4 DEG C	3 x 40 ml	[x]	
[ ]				[ ]	
[ ]				[ ]	
[ ]				[ ]	
[ ]				[ ]	
[ ]				[ ]	
[ ]				[ ]	
[ ]				[ ]	
[ ]				[ ]	
[ ]				[ ]	
[ ]				[ ]	

PURGE WATER DESCRIPTION

PURGE WATER CONTAINERIZED: Pour back into well

NUMBER OF BUCKETS GENERATED

NOTES

SIGNATURE: **GH**

FIELD DATA RECORD - LOW FLOW GROUNDWATER SAMPLING

PROJECT	**RA-008**	JOB NUMBER	N/A
WELL ID	**MW-265M-20130329-01**	DATE	29-Mar-13
TIME	START 1055 END 1140		

Innovative Engineering Solutions, Inc.
25 Spring Street
Walpole Massachusetts 02081

WATER LEVEL/PUMP SETTINGS

MEASUREMENT POINT
- [x] TOP OF WELL RISER
- [ ] TOP OF PROTECTIVE CASING
- [ ] OTHER

PROTECTIVE CASING STICKUP (FROM GROUND): FT

PROTECTIVE CASING/WELL DIFFERENCE: FT

INITIAL DEPTH TO WATER: 9.6 FT

WELL DEPTH: 48.40 FT

WELL DIAMETER: 2 IN

FINAL DEPTH TO WATER: 9.98 FT

SCREEN LENGTH: FT

PID AMBIENT AIR: NA PPM

DRAWDOWN VOLUME: 0.06 GAL
(initial - final x 0.163 {2-inch} or x 0.654 {4-inch})

PID WELL MOUTH: NA PPM

TOTAL VOLUME PURGED: 2.34 GAL
(purge rate (milliliters per minute) x time duration (minutes) x 0.00026 gal/millilter)

WELL INTEGRITY	YES	NO	N/A
CAP	✓		
CASING	✓		
LOCKED		✓	
COLLAR			✓

PURGE DATA

TIME	DEPTH TO WATER (ft)	PURGE RATE (ml/min)	TEMP (deg C)	SPECIFIC CONDUCTANCE (mg/cm)	pH (units)	DISS. O_2 (mg/L)	TURBIDITY (ntu)	REDOX (mv)	COMMENTS
1110	9.98	200	10.28	640	6.64	0.43	N/A	-109.9	
1115	9.98	200	10.40	765	6.65	0.29	N/A	-120.7	
1120	9.98	200	10.43	769	6.64	0.29	N/A	-120.9	
1125	9.98	200	10.42	770	6.64	0.27	N/A	-120.8	
							N/A		
							N/A		
							N/A		
							N/A		
							N/A		
							N/A		
							N/A		
							N/A		
							N/A		sampled @ 1130

EQUIPMENT DOCUMENTATION

TYPE OF PUMP	TYPE OF TUBING	TYPE OF PUMP MATERIAL
GEO 2	SILICON/ POLY	Peristaltic

ANALYTICAL PARAMETERS

	METHOD NUMBER	PRESERVATION METHOD	VOLUME REQUIRED	SAMPLE COLLECTED	SAMPLE RESULTS
[x] TA	8260B	HCL/4 DEG C	3 x 40 ml	[x]	
[x] TA	8260-SIMS	HCL/4 DEG C	3 x 40 ml	[x]	
[x] BTC		HCL/4 DEG C	1 x 40 ml	[x]	
[x] BTC		4 DEG C	4 x 40 ml	[x]	
[x] BTC		4 DEG C	1 x 250 ml	[x]	
[ ]				[ ]	
[ ]				[ ]	
[ ]				[ ]	
[ ]				[ ]	
[ ]				[ ]	
[ ]				[ ]	

PURGE WATER DESCRIPTION

PURGE WATER CONTAINERIZED: Pour back into well

NUMBER OF BUCKETS GENERATED

NOTES

SIGNATURE: **GH**

FIELD DATA RECORD - LOW FLOW GROUNDWATER SAMPLING

PROJECT	RA-008	JOB NUMBER	N/A
WELL ID	MW-265D-20130401-01	DATE	1-Apr-13
TIME	START 1105 END 1140		

Innovative Engineering Solutions, Inc.
25 Spring Street
Walpole Massachusetts 02081

WATER LEVEL/PUMP SETTINGS

MEASUREMENT POINT
- [x] TOP OF WELL RISER
- [ ] TOP OF PROTECTIVE CASING
- [ ] OTHER

PROTECTIVE CASING STICKUP (FROM GROUND): FT

PROTECTIVE CASING/WELL DIFFERENCE: FT

INITIAL DEPTH TO WATER: 11.62 FT

WELL DEPTH: 91.45 FT

WELL DIAMETER: 2 IN

FINAL DEPTH TO WATER: 14.05 FT

SCREEN LENGTH: FT

PID AMBIENT AIR: NA PPM

DRAWDOWN VOLUME: 0.4 GAL
(initial - final x 0.163 {2-inch} or x 0.654 {4-inch})

PID WELL MOUTH: NA PPM

TOTAL VOLUME PURGED: 2.34 GAL
(purge rate (milliliters per minute) x time duration (minutes) x 0.00026 gal/millilter)

WELL INTEGRITY	YES	NO	N/A
CAP	✓		
CASING	✓		
LOCKED		✓	
COLLAR			✓

PURGE DATA

TIME	DEPTH TO WATER (ft)	PURGE RATE (ml/min)	TEMP (deg C)	SPECIFIC CONDUCTANCE (mg/cm)	pH (units)	DISS. O_2 (mg/L)	TURBIDITY (ntu)	REDOX (mv)	COMMENTS
1115	14.20	200	11.29	288	7.33	1.60	N/A	161	
1120	14.05	150	11.31	287	7.51	0.63	N/A	151.8	
1125	14.05	150	11.34	288	7.53	0.62	N/A	151.6	
1130	14.05	150	11.27	287	7.53	0.58	N/A	151.2	
							N/A		
							N/A		
							N/A		
							N/A		
							N/A		
							N/A		
							N/A		
							N/A		
							N/A		sampled @ 1135

EQUIPMENT DOCUMENTATION

TYPE OF PUMP	TYPE OF TUBING	TYPE OF PUMP MATERIAL
GEO 2	SILICON/ POLY	Peristaltic

ANALYTICAL PARAMETERS

	METHOD NUMBER	PRESERVATION METHOD	VOLUME REQUIRED	SAMPLE COLLECTED	SAMPLE RESULTS
[x] TA	8260B	HCL/4 DEG C	3 x 40 ml	[x]	
[ ]				[ ]	
[ ]				[ ]	
[ ]				[ ]	
[ ]				[ ]	
[ ]				[ ]	
[ ]				[ ]	
[ ]				[ ]	
[ ]				[ ]	
[ ]				[ ]	
[ ]				[ ]	

PURGE WATER DESCRIPTION

PURGE WATER CONTAINERIZED: Pour back into well

NUMBER OF BUCKETS GENERATED

NOTES

SIGNATURE: **GH**

FIELD DATA RECORD - LOW FLOW GROUNDWATER SAMPLING

PROJECT	**RA-008**	JOB NUMBER	N/A
WELL ID	**MW-266Ma-20130329-01**	DATE	29-Mar-13
TIME	START 1320 END 1415		

Innovative Engineering Solutions, Inc.
25 Spring Street
Walpole Massachusetts 02081

WATER LEVEL/PUMP SETTINGS

MEASUREMENT POINT
- [x] TOP OF WELL RISER
- [ ] TOP OF PROTECTIVE CASING
- [ ] OTHER

PROTECTIVE CASING STICKUP (FROM GROUND): FT

PROTECTIVE CASING/WELL DIFFERENCE: FT

INITIAL DEPTH TO WATER: 8.46 FT

WELL DEPTH: 55.10 FT

WELL DIAMETER: 2 IN

FINAL DEPTH TO WATER: 10.39 FT

SCREEN LENGTH: FT

PID AMBIENT AIR: NA PPM

DRAWDOWN VOLUME: 0.31 GAL
(initial - final x 0.163 {2-inch} or x 0.654 {4-inch})

PID WELL MOUTH: NA PPM

TOTAL VOLUME PURGED: 2.86 GAL
(purge rate (milliliters per minute) x time duration (minutes) x 0.00026 gal/millilter)

WELL INTEGRITY	YES	NO	N/A
CAP	✓		
CASING	✓		
LOCKED		✓	
COLLAR			✓

PURGE DATA

TIME	DEPTH TO WATER (ft)	PURGE RATE (ml/min)	TEMP (deg C)	SPECIFIC CONDUCTANCE (mg/cm)	pH (units)	DISS. O_2 (mg/L)	TURBIDITY (ntu)	REDOX (mv)	COMMENTS
1330	10.50	200	11.02	320	6.47	2.84	N/A	-17.1	DupX2-20130329-01
1335	10.44	200	10.68	392	6.34	3.12	N/A	-20.4	
1340	10.46	200	10.44	480	6.29	2.40	N/A	-23.2	
1345	10.46	200	10.42	512	6.28	1.77	N/A	-26.7	
1350	10.44	200	10.42	524	6.30	1.28	N/A	-32.4	
1355	10.43	200	11.15	529	6.32	0.60	N/A	-37.2	
1400	10.41	200	11.41	535	6.33	0.57	N/A	-39.3	
1405	10.39	200	11.19	525	6.34	0.55	N/A	-40.6	
							N/A		
							N/A		
							N/A		
							N/A		
							N/A		sampled @ 1405

EQUIPMENT DOCUMENTATION

TYPE OF PUMP	TYPE OF TUBING	TYPE OF PUMP MATERIAL
GEO 2	SILICON/ POLY	Peristaltic

ANALYTICAL PARAMETERS

	METHOD NUMBER	PRESERVATION METHOD	VOLUME REQUIRED	SAMPLE COLLECTED	SAMPLE RESULTS
[x] TA	8260B	HCL/4 DEG C	3 x 40 ml	[x]	
[x] TA	8260-SIMS	HCL/4 DEG C	3 x 40 ml	[x]	
[ ]				[ ]	
[ ]				[ ]	
[ ]				[ ]	
[ ]				[ ]	
[ ]				[ ]	
[ ]				[ ]	
[ ]				[ ]	
[ ]				[ ]	
[ ]				[ ]	

PURGE WATER DESCRIPTION: clear, no odor

PURGE WATER CONTAINERIZED: Pour back into well

NUMBER OF BUCKETS GENERATED:

NOTES

DupX2-20130329-01

SIGNATURE: **DAJ**

FIELD DATA RECORD - LOW FLOW GROUNDWATER SAMPLING

PROJECT	**RA-008**	JOB NUMBER	N/A
WELL ID	**MW-266Mb-20130401-01**	DATE	1-Apr-13
TIME	START 1150 END 1230		

Innovative Engineering Solutions, Inc.
25 Spring Street
Walpole Massachusetts 02081

WATER LEVEL/PUMP SETTINGS

MEASUREMENT POINT
- [x] TOP OF WELL RISER
- [ ] TOP OF PROTECTIVE CASING
- [ ] OTHER

PROTECTIVE CASING STICKUP (FROM GROUND): FT

PROTECTIVE CASING/WELL DIFFERENCE: FT

INITIAL DEPTH TO WATER: 8.2 FT

WELL DEPTH: 70.10 FT

WELL DIAMETER: 2 IN

FINAL DEPTH TO WATER: 8.38 FT

SCREEN LENGTH: FT

PID AMBIENT AIR: NA PPM

DRAWDOWN VOLUME: 0.03 GAL
(initial - final x 0.163 {2-inch} or x 0.654 {4-inch})

PID WELL MOUTH: NA PPM

WELL INTEGRITY	YES	NO	N/A
CAP	✓		
CASING	✓		
LOCKED		✓	
COLLAR			✓

TOTAL VOLUME PURGED: 2.08 GAL
(purge rate (milliliters per minute) x time duration (minutes) x 0.00026 gal/millilter)

PURGE DATA

TIME	DEPTH TO WATER (ft)	PURGE RATE (ml/min)	TEMP (deg C)	SPECIFIC CONDUCTANCE (mg/cm)	pH (units)	DISS. O_2 (mg/L)	TURBIDITY (ntu)	REDOX (mv)	COMMENTS
1205	8.31	200	10.64	203	6.43	0.32	N/A	-50.4	
1210	8.36	200	10.67	210	6.37	0.19	N/A	-56.6	
1215	8.38	200	10.66	210	6.38	0.19	N/A	-57.3	
1220	8.38	200	10.73	211	6.37	0.24	N/A	-58.3	
							N/A		
							N/A		
							N/A		
							N/A		
							N/A		
							N/A		
							N/A		
							N/A		
							N/A		sampled @ 1225

EQUIPMENT DOCUMENTATION

TYPE OF PUMP	TYPE OF TUBING	TYPE OF PUMP MATERIAL
GEO 2	SILICON/ POLY	Peristaltic

ANALYTICAL PARAMETERS

	METHOD NUMBER	PRESERVATION METHOD	VOLUME REQUIRED	SAMPLE COLLECTED	SAMPLE RESULTS
[x] TA	8260B	HCL/4 DEG C	3 x 40 ml	[x]	
[ ]				[ ]	
[ ]				[ ]	
[ ]				[ ]	
[ ]				[ ]	
[ ]				[ ]	
[ ]				[ ]	
[ ]				[ ]	
[ ]				[ ]	
[ ]				[ ]	
[ ]				[ ]	

PURGE WATER DESCRIPTION

PURGE WATER CONTAINERIZED: Pour back into well

NUMBER OF BUCKETS GENERATED

NOTES

SIGNATURE: **GH**

FIELD DATA RECORD - LOW FLOW GROUNDWATER SAMPLING

PROJECT	**RA-008**	JOB NUMBER	N/A
WELL ID	**MW-267S-20130329-01**	DATE	29-Mar-13
TIME	START 1420 END 1455		

Innovative Engineering Solutions, Inc.
25 Spring Street
Walpole Massachusetts 02081

WATER LEVEL/PUMP SETTINGS

MEASUREMENT POINT
- [x] TOP OF WELL RISER
- [ ] TOP OF PROTECTIVE CASING
- [ ] OTHER

PROTECTIVE CASING STICKUP (FROM GROUND): FT

PROTECTIVE CASING/WELL DIFFERENCE: FT

INITIAL DEPTH TO WATER: 7.66 FT

WELL DEPTH: 76.40 FT

WELL DIAMETER: 2 IN

FINAL DEPTH TO WATER: 9.9 FT

SCREEN LENGTH: FT

PID AMBIENT AIR: NA PPM

DRAWDOWN VOLUME: 0.37 GAL
(initial - final x 0.163 {2-inch} or x 0.654 {4-inch})

PID WELL MOUTH: NA PPM

TOTAL VOLUME PURGED: 1.82 GAL
(purge rate (milliliters per minute) x time duration (minutes) x 0.00026 gal/millilter)

WELL INTEGRITY	YES	NO	N/A
CAP	✓		
CASING	✓		
LOCKED		✓	
COLLAR			✓

PURGE DATA

TIME	DEPTH TO WATER (ft)	PURGE RATE (ml/min)	TEMP (deg C)	SPECIFIC CONDUCTANCE (mg/cm)	pH (units)	DISS. O_2 (mg/L)	TURBIDITY (ntu)	REDOX (mv)	COMMENTS
1430	9.65	200	10.16	296	6.44	0.69	N/A	-45.3	
1435	9.90	150	10.12	303	6.45	0.43	N/A	-63.8	
1440	9.90	150	10.26	304	6.47	0.36	N/A	-67.3	
1445	9.90	150	10.33	306	6.44	034	N/A	-69	
							N/A		
							N/A		
							N/A		
							N/A		
							N/A		
							N/A		
							N/A		
							N/A		
							N/A		sampled @ 1450

EQUIPMENT DOCUMENTATION

TYPE OF PUMP	TYPE OF TUBING	TYPE OF PUMP MATERIAL
GEO 2	SILICON/ POLY	Peristaltic

ANALYTICAL PARAMETERS

	METHOD NUMBER	PRESERVATION METHOD	VOLUME REQUIRED	SAMPLE COLLECTED	SAMPLE RESULTS
[x] TA	8260B	HCL/4 DEG C	3 x 40 ml	[x]	
[x] TA	8260-SIMS	HCL/4 DEG C	3 x 40 ml	[x]	
[ ]				[ ]	
[ ]				[ ]	
[ ]				[ ]	
[ ]				[ ]	
[ ]				[ ]	
[ ]				[ ]	
[ ]				[ ]	
[ ]				[ ]	
[ ]				[ ]	

PURGE WATER DESCRIPTION

PURGE WATER CONTAINERIZED: Pour back into well

NUMBER OF BUCKETS GENERATED

NOTES

SIGNATURE: **GH**

FIELD DATA RECORD - LOW FLOW GROUNDWATER SAMPLING

PROJECT	RA-008	JOB NUMBER	N/A
WELL ID	MW-267M-20130329-01	DATE	29-Mar-13
TIME	START 1345 END 1425		

Innovative Engineering Solutions, Inc.
25 Spring Street
Walpole Massachusetts 02081

WATER LEVEL/PUMP SETTINGS

MEASUREMENT POINT
- [x] TOP OF WELL RISER
- [ ] TOP OF PROTECTIVE CASING
- [ ] OTHER

PROTECTIVE CASING STICKUP (FROM GROUND): FT

PROTECTIVE CASING/WELL DIFFERENCE: FT

INITIAL DEPTH TO WATER: 7.6 FT

WELL DEPTH: 98.20 FT

WELL DIAMETER: 2 IN

FINAL DEPTH TO WATER: 8.3 FT

SCREEN LENGTH: FT

PID AMBIENT AIR: NA PPM

DRAWDOWN VOLUME: 0.11 GAL
(initial - final x 0.163 {2-inch} or x 0.654 {4-inch})

PID WELL MOUTH: NA PPM

WELL INTEGRITY	YES	NO	N/A
CAP	✓		
CASING	✓		
LOCKED		✓	
COLLAR			✓

TOTAL VOLUME PURGED: 2.08 GAL
(purge rate (milliliters per minute) x time duration (minutes) x 0.00026 gal/millilter)

PURGE DATA

TIME	DEPTH TO WATER (ft)	PURGE RATE (ml/min)	TEMP (deg C)	SPECIFIC CONDUCTANCE (mg/cm)	pH (units)	DISS. O_2 (mg/L)	TURBIDITY (ntu)	REDOX (mv)	COMMENTS
1355	8.20	200	11.33	262	6.46	0.36	N/A	-73.5	
1400	8.26	200	11.49	263	6.51	0.31	N/A	-91.9	
1405	8.30	200	11.54	261	6.54	0.25	N/A	-88.8	
1410	8.30	200	11.57	261	6.55	0.24	N/A	-89	
							N/A		
							N/A		
							N/A		
							N/A		
							N/A		
							N/A		
							N/A		
							N/A		
							N/A		sampled @ 1415

EQUIPMENT DOCUMENTATION

TYPE OF PUMP	TYPE OF TUBING	TYPE OF PUMP MATERIAL
GEO 2	SILICON/ POLY	Peristaltic

ANALYTICAL PARAMETERS

	METHOD NUMBER	PRESERVATION METHOD	VOLUME REQUIRED	SAMPLE COLLECTED	SAMPLE RESULTS
[x] TA	8260B	HCL/4 DEG C	3 x 40 ml	[x]	
[x] TA	8260-SIMS	HCL/4 DEG C	3 x 40 ml	[x]	
[ ]				[ ]	
[ ]				[ ]	
[ ]				[ ]	
[ ]				[ ]	
[ ]				[ ]	
[ ]				[ ]	
[ ]				[ ]	
[ ]				[ ]	
[ ]				[ ]	

PURGE WATER DESCRIPTION

PURGE WATER CONTAINERIZED: Pour back into well

NUMBER OF BUCKETS GENERATED

NOTES

SIGNATURE: **GH**

FIELD DATA RECORD - LOW FLOW GROUNDWATER SAMPLING

PROJECT	**RA-008**	JOB NUMBER	N/A
WELL ID	**MW-268M-20130329-01**	DATE	29-Mar-13
TIME	START 0810 END 0840		

Innovative Engineering Solutions, Inc.
25 Spring Street
Walpole Massachusetts 02081

WATER LEVEL/PUMP SETTINGS

MEASUREMENT POINT
- [x] TOP OF WELL RISER
- [ ] TOP OF PROTECTIVE CASING
- [ ] OTHER

PROTECTIVE CASING STICKUP (FROM GROUND): FT

PROTECTIVE CASING/WELL DIFFERENCE: FT

INITIAL DEPTH TO WATER: 6.61 FT

WELL DEPTH: 93.80 FT

WELL DIAMETER: 2 IN

FINAL DEPTH TO WATER: 6.82 FT

SCREEN LENGTH: FT

PID AMBIENT AIR: NA PPM

DRAWDOWN VOLUME: 0.03 GAL
(initial - final x 0.163 {2-inch} or x 0.654 {4-inch})

PID WELL MOUTH: NA PPM

TOTAL VOLUME PURGED: 1.56 GAL
(purge rate (milliliters per minute) x time duration (minutes) x 0.00026 gal/millilter)

WELL INTEGRITY	YES	NO	N/A
CAP	✓		
CASING	✓		
LOCKED		✓	
COLLAR			✓

PURGE DATA

TIME	DEPTH TO WATER (ft)	PURGE RATE (ml/min)	TEMP (deg C)	SPECIFIC CONDUCTANCE (mg/cm)	pH (units)	DISS. O_2 (mg/L)	TURBIDITY (ntu)	REDOX (mv)	COMMENTS
0820	6.82	200	8.34	227	6.90	0.50	N/A	-124.4	
0825	6.82	200	8.64	229	6.92	0.35	N/A	-131.1	
0830	6.82	200	8.75	230	6.93	0.36	N/A	-135.4	
0835	6.82	200	8.80	230	6.94	0.34	N/A	-136.3	
							N/A		
							N/A		
							N/A		
							N/A		
							N/A		
							N/A		
							N/A		
							N/A		
							N/A		sampled @ 0835

EQUIPMENT DOCUMENTATION

TYPE OF PUMP	TYPE OF TUBING	TYPE OF PUMP MATERIAL
GEO 2	SILICON/ POLY	Peristaltic

ANALYTICAL PARAMETERS

	METHOD NUMBER	PRESERVATION METHOD	VOLUME REQUIRED	SAMPLE COLLECTED	SAMPLE RESULTS
[x] TA	8260B	HCL/4 DEG C	3 x 40 ml	[x]	
[x] TA	8260-SIMS	HCL/4 DEG C	3 x 40 ml	[x]	
[x] BTC		HCL/4 DEG C	1 x 40 ml	[x]	
[x] BTC		4 DEG C	4 x 40 ml	[x]	
[x] BTC		4 DEG C	1 x 250 ml	[x]	
[ ]				[ ]	
[ ]				[ ]	
[ ]				[ ]	
[ ]				[ ]	
[ ]				[ ]	
[ ]				[ ]	

PURGE WATER DESCRIPTION: clear, no odor

PURGE WATER CONTAINERIZED: Pour back into well

NUMBER OF BUCKETS GENERATED:

NOTES

SIGNATURE: **DAJ**

FIELD DATA RECORD - LOW FLOW GROUNDWATER SAMPLING

PROJECT	**RA-008**	JOB NUMBER	N/A
WELL ID	**MW-268D-20130401-01**	DATE	1-Apr-13
TIME	START 0900 END 0930		

Innovative Engineering Solutions, Inc.
25 Spring Street
Walpole Massachusetts 02081

WATER LEVEL/PUMP SETTINGS

MEASUREMENT POINT
- [x] TOP OF WELL RISER
- [ ] TOP OF PROTECTIVE CASING
- [ ] OTHER

PROTECTIVE CASING STICKUP (FROM GROUND): FT

PROTECTIVE CASING/WELL DIFFERENCE: FT

INITIAL DEPTH TO WATER: 7.44 FT

WELL DEPTH: 130.15 FT

WELL DIAMETER: 2 IN

FINAL DEPTH TO WATER: 7.53 FT

SCREEN LENGTH: FT

PID AMBIENT AIR: NA PPM

DRAWDOWN VOLUME: 0.02 GAL
(initial - final x 0.163 {2-inch} or x 0.654 {4-inch})

PID WELL MOUTH: NA PPM

TOTAL VOLUME PURGED: 1.56 GAL
(purge rate (milliliters per minute) x time duration (minutes) x 0.00026 gal/millilter)

WELL INTEGRITY	YES	NO	N/A
CAP	✓		
CASING	✓		
LOCKED		✓	
COLLAR			✓

PURGE DATA

TIME	DEPTH TO WATER (ft)	PURGE RATE (ml/min)	TEMP (deg C)	SPECIFIC CONDUCTANCE (mg/cm)	pH (units)	DISS. O_2 (mg/L)	TURBIDITY (ntu)	REDOX (mv)	COMMENTS
0910	7.57	200	8.94	198	8.17	0.90	N/A	-118.2	
0915	7.53	200	9.14	221	7.90	0.52	N/A	-143.1	
0920	7.53	200	9.25	222	7.88	0.49	N/A	-145.8	
0925	7.53	200	9.26	223	7.86	0.48	N/A	-149.1	
							N/A		
							N/A		
							N/A		
							N/A		
							N/A		
							N/A		
							N/A		
							N/A		
							N/A		sampled @ 0925

EQUIPMENT DOCUMENTATION

TYPE OF PUMP	TYPE OF TUBING	TYPE OF PUMP MATERIAL
GEO 2	SILICON/ POLY	Peristaltic

ANALYTICAL PARAMETERS

	METHOD NUMBER	PRESERVATION METHOD	VOLUME REQUIRED	SAMPLE COLLECTED	SAMPLE RESULTS
[x] TA	8260B	HCL/4 DEG C	3 x 40 ml	[x]	
[ ]				[ ]	
[ ]				[ ]	
[ ]				[ ]	
[ ]				[ ]	
[ ]				[ ]	
[ ]				[ ]	
[ ]				[ ]	
[ ]				[ ]	
[ ]				[ ]	
[ ]				[ ]	

PURGE WATER DESCRIPTION: clear, no odor

PURGE WATER CONTAINERIZED: Pour back into well

NUMBER OF BUCKETS GENERATED:

NOTES

SIGNATURE: **DAJ**

FIELD DATA RECORD - LOW FLOW GROUNDWATER SAMPLING

PROJECT	**RA-008**	JOB NUMBER	N/A
WELL ID	**MW-269Ma-20130329-01**	DATE	29-Mar-13
TIME	START 1115 END 1210		

Innovative Engineering Solutions, Inc.
25 Spring Street
Walpole Massachusetts 02081

WATER LEVEL/PUMP SETTINGS

MEASUREMENT POINT
- [x] TOP OF WELL RISER
- [ ] TOP OF PROTECTIVE CASING
- [ ] OTHER

PROTECTIVE CASING STICKUP (FROM GROUND): FT

PROTECTIVE CASING/WELL DIFFERENCE: FT

INITIAL DEPTH TO WATER: 7.07 FT

WELL DEPTH: 33.68 FT

WELL DIAMETER: 2 IN

FINAL DEPTH TO WATER: 9.38 FT

SCREEN LENGTH: FT

PID AMBIENT AIR: NA PPM

DRAWDOWN VOLUME: 0.38 GAL
(initial - final x 0.163 {2-inch} or x 0.654 {4-inch})

PID WELL MOUTH: NA PPM

TOTAL VOLUME PURGED: 2.86 GAL
(purge rate (milliliters per minute) x time duration (minutes) x 0.00026 gal/millilter)

WELL INTEGRITY	YES	NO	N/A
CAP	✓		
CASING	✓		
LOCKED		✓	
COLLAR			✓

PURGE DATA

TIME	DEPTH TO WATER (ft)	PURGE RATE (ml/min)	TEMP (deg C)	SPECIFIC CONDUCTANCE (mg/cm)	pH (units)	DISS. O_2 (mg/L)	TURBIDITY (ntu)	REDOX (mv)	COMMENTS
1125	9.21	200	9.62	287	7.70	2.22	N/A	-79.7	
1135	9.62	200	9.71	289	7.24	0.65	N/A	-100.6	
1140	9.41	200	9.86	288	7.19	0.39	N/A	-111.4	
1145	9.38	200	9.95	288	7.14	0.32	N/A	-113.4	
1150	9.38	200	9.98	287	7.10	0.28	N/A	-116	
1155	9.38	200	10.01	287	7.08	0.22	N/A	-115.6	
1200	9.38	200	9.99	288	7.08	0.24	N/A	-115.4	
1205	9.38	200	9.97	287	7.07	0.24	N/A	-115.4	
							N/A		
							N/A		
							N/A		
							N/A		
							N/A		sampled @ 1205

EQUIPMENT DOCUMENTATION

TYPE OF PUMP	TYPE OF TUBING	TYPE OF PUMP MATERIAL
GEO 2	SILICON/ POLY	Peristaltic

ANALYTICAL PARAMETERS

	METHOD NUMBER	PRESERVATION METHOD	VOLUME REQUIRED	SAMPLE COLLECTED	SAMPLE RESULTS
[x] TA	8260B	HCL/4 DEG C	3 x 40 ml	[x]	
[x] TA	8260-SIMS	HCL/4 DEG C	3 x 40 ml	[x]	
[ ]				[ ]	
[ ]				[ ]	
[ ]				[ ]	
[ ]				[ ]	
[ ]				[ ]	
[ ]				[ ]	
[ ]				[ ]	
[ ]				[ ]	
[ ]				[ ]	

PURGE WATER DESCRIPTION: Rusty, very turbid, no odor

PURGE WATER CONTAINERIZED: Pour back into well

NUMBER OF BUCKETS GENERATED:

NOTES

SIGNATURE: **DAJ**

FIELD DATA RECORD - LOW FLOW GROUNDWATER SAMPLING

PROJECT	**RA-008**	JOB NUMBER	N/A
WELL ID	**MW-551-20130329-01**	DATE	29-Mar-13
TIME	START 1255 END 1330		

Innovative Engineering Solutions, Inc.
25 Spring Street
Walpole Massachusetts 02081

WATER LEVEL/PUMP SETTINGS

MEASUREMENT POINT
- [x] TOP OF WELL RISER
- [ ] TOP OF PROTECTIVE CASING
- [ ] OTHER

PROTECTIVE CASING STICKUP (FROM GROUND): FT

PROTECTIVE CASING/WELL DIFFERENCE: FT

INITIAL DEPTH TO WATER: 6.17 FT

WELL DEPTH: 26.30 FT

WELL DIAMETER: 2 IN

FINAL DEPTH TO WATER: 9.05 FT

SCREEN LENGTH: FT

PID AMBIENT AIR: NA PPM

DRAWDOWN VOLUME: 0.47 GAL
(initial - final x 0.163 {2-inch} or x 0.654 {4-inch})

PID WELL MOUTH: NA PPM

TOTAL VOLUME PURGED: 1.82 GAL
(purge rate (milliliters per minute) x time duration (minutes) x 0.00026 gal/millilter)

WELL INTEGRITY	YES	NO	N/A
CAP	✓		
CASING	✓		
LOCKED		✓	
COLLAR			✓

PURGE DATA

TIME	DEPTH TO WATER (ft)	PURGE RATE (ml/min)	TEMP (deg C)	SPECIFIC CONDUCTANCE (mg/cm)	pH (units)	DISS. O_2 (mg/L)	TURBIDITY (ntu)	REDOX (mv)	COMMENTS
1305	9.20	200	10.18	221	6.44	0.12	N/A	-87.1	
1310	9.05	150	10.64	232	6.43	0.14	N/A	-91.8	
1315	9.05	150	10.73	235	6.43	0.14	N/A	-91.2	
1320	9.05	150	10.81	237	6.43	0.14	N/A	-91.2	
							N/A		
							N/A		
							N/A		
							N/A		
							N/A		
							N/A		
							N/A		
							N/A		
							N/A		sampled @ 1325

EQUIPMENT DOCUMENTATION

TYPE OF PUMP	TYPE OF TUBING	TYPE OF PUMP MATERIAL
GEO 2	SILICON/ POLY	Peristaltic

ANALYTICAL PARAMETERS

	METHOD NUMBER	PRESERVATION METHOD	VOLUME REQUIRED	SAMPLE COLLECTED	SAMPLE RESULTS
[x] TA	8260B	HCL/4 DEG C	3 x 40 ml	[x]	
[ ]				[ ]	
[ ]				[ ]	
[ ]				[ ]	
[ ]				[ ]	
[ ]				[ ]	
[ ]				[ ]	
[ ]				[ ]	
[ ]				[ ]	
[ ]				[ ]	
[ ]				[ ]	

PURGE WATER DESCRIPTION

PURGE WATER CONTAINERIZED: Pour back into well

NUMBER OF BUCKETS GENERATED

NOTES

SIGNATURE: **GH**

FIELD DATA RECORD - LOW FLOW GROUNDWATER SAMPLING

PROJECT	**RA-008**	JOB NUMBER	N/A
WELL ID	**MW-552-20130329-01**	DATE	29-Mar-13
TIME	START 0905 END 0940		

Innovative Engineering Solutions, Inc.
25 Spring Street
Walpole Massachusetts 02081

WATER LEVEL/PUMP SETTINGS

MEASUREMENT POINT
- [x] TOP OF WELL RISER
- [ ] TOP OF PROTECTIVE CASING
- [ ] OTHER

PROTECTIVE CASING STICKUP (FROM GROUND): FT

PROTECTIVE CASING/WELL DIFFERENCE: FT

INITIAL DEPTH TO WATER: 8.6 FT

WELL DEPTH: 27.10 FT

WELL DIAMETER: 2 IN

FINAL DEPTH TO WATER: 8.6 FT

SCREEN LENGTH: FT

PID AMBIENT AIR: NA PPM

DRAWDOWN VOLUME: 0 GAL
(initial - final x 0.163 {2-inch} or x 0.654 {4-inch})

PID WELL MOUTH: NA PPM

WELL INTEGRITY	YES	NO	N/A
CAP	✓		
CASING	✓		
LOCKED		✓	
COLLAR			✓

TOTAL VOLUME PURGED: 1.82 GAL
(purge rate (milliliters per minute) x time duration (minutes) x 0.00026 gal/millilter)

PURGE DATA

TIME	DEPTH TO WATER (ft)	PURGE RATE (ml/min)	TEMP (deg C)	SPECIFIC CONDUCTANCE (mg/cm)	pH (units)	DISS. O_2 (mg/L)	TURBIDITY (ntu)	REDOX (mv)	COMMENTS
0915	8.60	200	10.11	445	6.81	0.70	N/A	-135.9	
0920	8.60	200	10.21	433	6.76	0.48	N/A	-133.2	
0925	8.60	200	10.34	425	6.74	0.43	N/A	-132.2	
0930	8.60	200	10.40	420	6.72	0.39	N/A	-130.5	
							N/A		
							N/A		
							N/A		
							N/A		
							N/A		
							N/A		
							N/A		
							N/A		
							N/A		sampled @ 0935

EQUIPMENT DOCUMENTATION

TYPE OF PUMP	TYPE OF TUBING	TYPE OF PUMP MATERIAL
GEO 2	SILICON/ POLY	Peristaltic

ANALYTICAL PARAMETERS

	METHOD NUMBER	PRESERVATION METHOD	VOLUME REQUIRED	SAMPLE COLLECTED	SAMPLE RESULTS
[x] TA	8260B	HCL/4 DEG C	3 x 40 ml	[x]	
[x] TA	8260-SIMS	HCL/4 DEG C	3 x 40 ml	[x]	
[x] BTC		HCL/4 DEG C	1 x 40 ml	[x]	
[x] BTC		4 DEG C	4 x 40 ml	[x]	
[x] BTC		4 DEG C	1 x 250 ml	[x]	
[ ]				[ ]	
[ ]				[ ]	
[ ]				[ ]	
[ ]				[ ]	
[ ]				[ ]	
[ ]				[ ]	

PURGE WATER DESCRIPTION: clear

PURGE WATER CONTAINERIZED: Pour back into well

NUMBER OF BUCKETS GENERATED:

NOTES

SIGNATURE: **GH**

FIELD DATA RECORD - LOW FLOW GROUNDWATER SAMPLING

PROJECT	**RA-008**	JOB NUMBER	N/A
WELL ID	**MW-553-20130329-01**	DATE	29-Mar-13
TIME	START 1000 END 1045		

Innovative Engineering Solutions, Inc.
25 Spring Street
Walpole Massachusetts 02081

WATER LEVEL/PUMP SETTINGS

MEASUREMENT POINT
- [x] TOP OF WELL RISER
- [ ] TOP OF PROTECTIVE CASING
- [ ] OTHER

PROTECTIVE CASING STICKUP (FROM GROUND): FT

PROTECTIVE CASING/WELL DIFFERENCE: FT

INITIAL DEPTH TO WATER: 7.5 FT

WELL DEPTH: 21.50 FT

WELL DIAMETER: 2 IN

FINAL DEPTH TO WATER: 14.1 FT

SCREEN LENGTH: FT

PID AMBIENT AIR: NA PPM

DRAWDOWN VOLUME: 1.08 GAL
(initial - final x 0.163 {2-inch} or x 0.654 {4-inch})

PID WELL MOUTH: NA PPM

TOTAL VOLUME PURGED: 2.34 GAL
(purge rate (milliliters per minute) x time duration (minutes) x 0.00026 gal/millilter)

WELL INTEGRITY	YES	NO	N/A
CAP	✓		
CASING	✓		
LOCKED		✓	
COLLAR			✓

PURGE DATA

TIME	DEPTH TO WATER (ft)	PURGE RATE (ml/min)	TEMP (deg C)	SPECIFIC CONDUCTANCE (mg/cm)	pH (units)	DISS. O_2 (mg/L)	TURBIDITY (ntu)	REDOX (mv)	COMMENTS
1015	14.00	200	9.37	741	7.17	2.75	N/A	-153.3	
1020	14.10	200	9.49	743	7.22	0.26	N/A	-182.6	
1025	14.10	200	9.60	746	7.20	0.23	N/A	-180	
1030	14.10	200	9.60	748	7.19	0.21	N/A	-179.9	
							N/A		
							N/A		
							N/A		
							N/A		
							N/A		
							N/A		
							N/A		
							N/A		
							N/A		Sampled @ 1040

EQUIPMENT DOCUMENTATION

TYPE OF PUMP	TYPE OF TUBING	TYPE OF PUMP MATERIAL
GEO 2	SILICON/ POLY	Peristaltic

ANALYTICAL PARAMETERS

	METHOD NUMBER	PRESERVATION METHOD	VOLUME REQUIRED	SAMPLE COLLECTED	SAMPLE RESULTS
[x] TA	8260B	HCL/4 DEG C	3 x 40 ml	[x]	
[x] BTC		HCL/4 DEG C	1 x 40 ml	[x]	
[x] BTC		4 DEG C	4 x 40 ml	[x]	
[x] BTC		4 DEG C	1 x 250 ml	[x]	
[ ]				[ ]	
[ ]				[ ]	
[ ]				[ ]	
[ ]				[ ]	
[ ]				[ ]	
[ ]				[ ]	
[ ]				[ ]	

PURGE WATER DESCRIPTION: clear

PURGE WATER CONTAINERIZED: Pour back into well

NUMBER OF BUCKETS GENERATED:

NOTES

SIGNATURE: **GH**

FIELD DATA RECORD - LOW FLOW GROUNDWATER SAMPLING

PROJECT	**RA-008**	JOB NUMBER	N/A
WELL ID	**MW-560-20130329-01**	DATE	29-Mar-13
TIME	START 1025 END 1100		

Innovative Engineering Solutions, Inc.
25 Spring Street
Walpole Massachusetts 02081

WATER LEVEL/PUMP SETTINGS

MEASUREMENT POINT
- [x] TOP OF WELL RISER
- [ ] TOP OF PROTECTIVE CASING
- [ ] OTHER

PROTECTIVE CASING STICKUP (FROM GROUND): FT

PROTECTIVE CASING/WELL DIFFERENCE: FT

INITIAL DEPTH TO WATER: 7.58 FT

WELL DEPTH: 65.20 FT

WELL DIAMETER: 2 IN

FINAL DEPTH TO WATER: 8.85 FT

SCREEN LENGTH: FT

PID AMBIENT AIR: NA PPM

DRAWDOWN VOLUME: 0.21 GAL
(initial - final x 0.163 {2-inch} or x 0.654 {4-inch})

WELL INTEGRITY

	YES	NO	N/A
CAP	☑	☐	☐
CASING	☑	☐	☐
LOCKED	☐	☑	☐
COLLAR	☐	☐	☑

PID WELL MOUTH: NA PPM

TOTAL VOLUME PURGED: 1.82 GAL
(purge rate (milliliters per minute) x time duration (minutes) x 0.00026 gal/millilter)

PURGE DATA

TIME	DEPTH TO WATER (ft)	PURGE RATE (ml/min)	TEMP (deg C)	SPECIFIC CONDUCTANCE (mg/cm)	pH (units)	DISS. O_2 (mg/L)	TURBIDITY (ntu)	REDOX (mv)	COMMENTS
1035	8.38	200	9.48	318	11.16	0.54	N/A	-329.4	
1040	8.73	200	9.84	323	11.26	0.35	N/A	-305.5	
1045	8.78	200	9.80	323	11.28	0.28	N/A	-296.4	
1050	8.81	200	10.02	325	11.30	0.28	N/A	-288.7	
1055	8.85	200	10.03	325	11.32	0.27	N/A	-286.2	
							N/A		
							N/A		
							N/A		
							N/A		
							N/A		
							N/A		
							N/A		
							N/A		Sampled @ 1055

EQUIPMENT DOCUMENTATION

TYPE OF PUMP	TYPE OF TUBING	TYPE OF PUMP MATERIAL
GEO 2	SILICON/ POLY	Peristaltic

ANALYTICAL PARAMETERS

	METHOD NUMBER	PRESERVATION METHOD	VOLUME REQUIRED	SAMPLE COLLECTED	SAMPLE RESULTS
[x] TA	8260B	HCL/4 DEG C	3 x 40 ml	[x]	
[x] BTC		HCL/4 DEG C	1 x 40 ml	[x]	
[x] BTC		4 DEG C	4 x 40 ml	[x]	
[x] BTC		4 DEG C	1 x 250 ml	[x]	
[ ]				[ ]	
[ ]				[ ]	
[ ]				[ ]	
[ ]				[ ]	
[ ]				[ ]	
[ ]				[ ]	
[ ]				[ ]	

PURGE WATER DESCRIPTION: clear, no odor

PURGE WATER CONTAINERIZED: Pour back into well

NUMBER OF BUCKETS GENERATED:

NOTES

SIGNATURE: **DAJ**

FIELD DATA RECORD - LOW FLOW GROUNDWATER SAMPLING

PROJECT	**RA-008**	JOB NUMBER	N/A
WELL ID	**MW-561-20130329-01**	DATE	29-Mar-13
TIME	START 0950 END 1020		

Innovative Engineering Solutions, Inc.
25 Spring Street
Walpole Massachusetts 02081

WATER LEVEL/PUMP SETTINGS

MEASUREMENT POINT
- [x] TOP OF WELL RISER
- [ ] TOP OF PROTECTIVE CASING
- [ ] OTHER

PROTECTIVE CASING STICKUP (FROM GROUND): FT

PROTECTIVE CASING/WELL DIFFERENCE: FT

INITIAL DEPTH TO WATER: 7.49 FT

WELL DEPTH: 53.65 FT

WELL DIAMETER: 2 IN

FINAL DEPTH TO WATER: 7.62 FT

SCREEN LENGTH: FT

PID AMBIENT AIR: NA PPM

DRAWDOWN VOLUME: 0.02 GAL
(initial - final x 0.163 {2-inch} or x 0.654 {4-inch})

PID WELL MOUTH: NA PPM

TOTAL VOLUME PURGED: 1.56 GAL
(purge rate (milliliters per minute) x time duration (minutes) x 0.00026 gal/millilter)

WELL INTEGRITY	YES	NO	N/A
CAP	✓		
CASING	✓		
LOCKED		✓	
COLLAR			✓

PURGE DATA

TIME	DEPTH TO WATER (ft)	PURGE RATE (ml/min)	TEMP (deg C)	SPECIFIC CONDUCTANCE (mg/cm)	pH (units)	DISS. O_2 (mg/L)	TURBIDITY (ntu)	REDOX (mv)	COMMENTS
1000	7.81	200	9.69	308	6.71	0.60	N/A	-103.4	
1005	7.75	200	9.79	328	6.67	0.50	N/A	-100.1	
1010	7.68	200	9.84	333	6.66	0.48	N/A	-99.3	
1015	7.62	200	9.72	339	6.66	0.50	N/A	-98.7	
							N/A		
							N/A		
							N/A		
							N/A		
							N/A		
							N/A		
							N/A		
							N/A		
							N/A		Sampled @ 1015

EQUIPMENT DOCUMENTATION

TYPE OF PUMP	TYPE OF TUBING	TYPE OF PUMP MATERIAL
GEO 2	SILICON/ POLY	Peristaltic

ANALYTICAL PARAMETERS

	METHOD NUMBER	PRESERVATION METHOD	VOLUME REQUIRED	SAMPLE COLLECTED	SAMPLE RESULTS
[x] TA	8260B	HCL/4 DEG C	3 x 40 ml	[x]	
[x] BTC		HCL/4 DEG C	1 x 40 ml	[x]	
[x] BTC		4 DEG C	4 x 40 ml	[x]	
[x] BTC		4 DEG C	1 x 250 ml	[x]	
[ ]				[ ]	
[ ]				[ ]	
[ ]				[ ]	
[ ]				[ ]	
[ ]				[ ]	
[ ]				[ ]	
[ ]				[ ]	

PURGE WATER DESCRIPTION: clear, no odor

PURGE WATER CONTAINERIZED: Pour back into well

NUMBER OF BUCKETS GENERATED:

NOTES

SIGNATURE: **DAJ**

FIELD DATA RECORD - LOW FLOW GROUNDWATER SAMPLING

PROJECT	**RA-008**	JOB NUMBER	N/A
WELL ID	**MW-562-20130329-01**	DATE	29-Mar-13
TIME	START 1200 END 1235		

Innovative Engineering Solutions, Inc.
25 Spring Street
Walpole Massachusetts 02081

WATER LEVEL/PUMP SETTINGS

MEASUREMENT POINT
- [x] TOP OF WELL RISER
- [ ] TOP OF PROTECTIVE CASING
- [ ] OTHER

PROTECTIVE CASING STICKUP (FROM GROUND): FT

PROTECTIVE CASING/WELL DIFFERENCE: FT

INITIAL DEPTH TO WATER: 5.83 FT

WELL DEPTH: 41.60 FT

WELL DIAMETER: 2 IN

FINAL DEPTH TO WATER: 6.68 FT

SCREEN LENGTH: FT

PID AMBIENT AIR: NA PPM

DRAWDOWN VOLUME: 0.14 GAL
(initial - final x 0.163 {2-inch} or x 0.654 {4-inch})

PID WELL MOUTH: NA PPM

TOTAL VOLUME PURGED: 1.82 GAL
(purge rate (milliliters per minute) x time duration (minutes) x 0.00026 gal/millilter)

WELL INTEGRITY	YES	NO	N/A
CAP	✓		
CASING	✓		
LOCKED		✓	
COLLAR			✓

PURGE DATA

TIME	DEPTH TO WATER (ft)	PURGE RATE (ml/min)	TEMP (deg C)	SPECIFIC CONDUCTANCE (mg/cm)	pH (units)	DISS. O_2 (mg/L)	TURBIDITY (ntu)	REDOX (mv)	COMMENTS
1210	6.68	200	10.52	877	6.64	0.36	N/A	-141.8	
1215	6.68	200	10.75	848	6.61	0.32	N/A	-140.5	
1220	6.68	200	10.85	838	6.58	0.28	N/A	-139.2	
1225	6.68	200	10.87	836	6.56	0.27	N/A	-139.5	
							N/A		
							N/A		
							N/A		
							N/A		
							N/A		
							N/A		
							N/A		
							N/A		
							N/A		Sampled @ 1230

EQUIPMENT DOCUMENTATION

TYPE OF PUMP	TYPE OF TUBING	TYPE OF PUMP MATERIAL
GEO 2	SILICON/ POLY	Peristaltic

ANALYTICAL PARAMETERS

	METHOD NUMBER	PRESERVATION METHOD	VOLUME REQUIRED	SAMPLE COLLECTED	SAMPLE RESULTS
[x] TA	8260B	HCL/4 DEG C	3 x 40 ml	[x]	
[x] BTC		HCL/4 DEG C	1 x 40 ml	[x]	
[x] BTC		4 DEG C	4 x 40 ml	[x]	
[x] BTC		4 DEG C	1 x 250 ml	[x]	
[ ]				[ ]	
[ ]				[ ]	
[ ]				[ ]	
[ ]				[ ]	
[ ]				[ ]	
[ ]				[ ]	
[ ]				[ ]	

PURGE WATER DESCRIPTION

PURGE WATER CONTAINERIZED: Pour back into well

NUMBER OF BUCKETS GENERATED

NOTES

SIGNATURE: **GH**

FIELD DATA RECORD - LOW FLOW GROUNDWATER SAMPLING

PROJECT	**RA-008**	JOB NUMBER	N/A
WELL ID	**MW-563-20130329-01**	DATE	29-Mar-13
TIME	START 0910 END 0940		

Innovative Engineering Solutions, Inc.
25 Spring Street
Walpole Massachusetts 02081

WATER LEVEL/PUMP SETTINGS

MEASUREMENT POINT
- [x] TOP OF WELL RISER
- [ ] TOP OF PROTECTIVE CASING
- [ ] OTHER

PROTECTIVE CASING STICKUP (FROM GROUND): FT

PROTECTIVE CASING/WELL DIFFERENCE: FT

INITIAL DEPTH TO WATER: 5.84 FT

WELL DEPTH: 65.20 FT

WELL DIAMETER: 2 IN

FINAL DEPTH TO WATER: 7.71 FT

SCREEN LENGTH: FT

PID AMBIENT AIR: NA PPM

DRAWDOWN VOLUME: 0.3 GAL
(initial - final x 0.163 {2-inch} or x 0.654 {4-inch})

PID WELL MOUTH: NA PPM

WELL INTEGRITY	YES	NO	N/A
CAP	✓		
CASING	✓		
LOCKED		✓	
COLLAR			✓

TOTAL VOLUME PURGED: 1.56 GAL
(purge rate (milliliters per minute) x time duration (minutes) x 0.00026 gal/millilter)

PURGE DATA

TIME	DEPTH TO WATER (ft)	PURGE RATE (ml/min)	TEMP (deg C)	SPECIFIC CONDUCTANCE (mg/cm)	pH (units)	DISS. O_2 (mg/L)	TURBIDITY (ntu)	REDOX (mv)	COMMENTS
0920	7.00	200	9.70	464	6.28	0.37	N/A	-49.3	
0925	7.49	200	9.83	459	6.25	0.26	N/A	-53	
0930	7.71	200	9.87	454	6.24	0.24	N/A	-53.4	
0935	7.71	200	9.89	448	6.23	0.26	N/A	-54.2	
							N/A		
							N/A		
							N/A		
							N/A		
							N/A		
							N/A		
							N/A		
							N/A		
							N/A		Sampled @ 0935

EQUIPMENT DOCUMENTATION

TYPE OF PUMP	TYPE OF TUBING	TYPE OF PUMP MATERIAL
GEO 2	SILICON/ POLY	Peristaltic

ANALYTICAL PARAMETERS

	METHOD NUMBER	PRESERVATION METHOD	VOLUME REQUIRED	SAMPLE COLLECTED	SAMPLE RESULTS
[x] TA	8260B	HCL/4 DEG C	3 x 40 ml	[x]	
[x] BTC		HCL/4 DEG C	1 x 40 ml	[x]	
[x] BTC		4 DEG C	4 x 40 ml	[x]	
[x] BTC		4 DEG C	1 x 250 ml	[x]	
[ ]				[ ]	
[ ]				[ ]	
[ ]				[ ]	
[ ]				[ ]	
[ ]				[ ]	
[ ]				[ ]	
[ ]				[ ]	

PURGE WATER DESCRIPTION: clear, no odor

PURGE WATER CONTAINERIZED: Pour back into well

NUMBER OF BUCKETS GENERATED:

NOTES

SIGNATURE: **DAJ**

FIELD DATA RECORD - LOW FLOW GROUNDWATER SAMPLING

PROJECT	**RA-008**	JOB NUMBER	N/A
WELL ID	**REW-1-20130328-01**	DATE	28-Mar-13
TIME	START 1200 END 1230		

Innovative Engineering Solutions, Inc.
25 Spring Street
Walpole Massachusetts 02081

WATER LEVEL/PUMP SETTINGS

MEASUREMENT POINT
- [x] TOP OF WELL RISER
- [ ] TOP OF PROTECTIVE CASING
- [ ] OTHER

PROTECTIVE CASING STICKUP (FROM GROUND): FT

PROTECTIVE CASING/WELL DIFFERENCE: FT

INITIAL DEPTH TO WATER: Note 1 FT

WELL DEPTH: Note 1 FT

WELL DIAMETER: 2 IN

FINAL DEPTH TO WATER: Note 1 FT

SCREEN LENGTH: FT

PID AMBIENT AIR: NA PPM

DRAWDOWN VOLUME: Note 1 GAL
(initial - final x 0.163 {2-inch} or x 0.654 {4-inch})

PID WELL MOUTH: NA PPM

TOTAL VOLUME PURGED: 1.56 GAL
(purge rate (milliliters per minute) x time duration (minutes) x 0.00026 gal/millilter)

WELL INTEGRITY	YES	NO	N/A
CAP	✓		
CASING	✓		
LOCKED		✓	
COLLAR			✓

PURGE DATA

TIME	DEPTH TO WATER (ft)	PURGE RATE (ml/min)	TEMP (deg C)	SPECIFIC CONDUCTANCE (mg/cm)	pH (units)	DISS. O_2 (mg/L)	TURBIDITY (ntu)	REDOX (mv)	COMMENTS
1210	Note 1	200	11.17	852	6.54	0.44	N/A	-116.8	
1215	Note 1	200	11.27	853	6.54	0.40	N/A	-118.1	
1220	Note 1	200	11.35	850	6.54	0.38	N/A	-119.5	
1225	Note 1	200	11.48	853	6.53	0.37	N/A	-119.5	
							N/A		
							N/A		
							N/A		
							N/A		
							N/A		
							N/A		
							N/A		
							N/A		
							N/A		Sampled @ 1225

EQUIPMENT DOCUMENTATION

TYPE OF PUMP	TYPE OF TUBING	TYPE OF PUMP MATERIAL
GEO 2	SILICON/ POLY	Peristaltic

ANALYTICAL PARAMETERS

	METHOD NUMBER	PRESERVATION METHOD	VOLUME REQUIRED	SAMPLE COLLECTED	SAMPLE RESULTS
[x] TA	8260B	HCL/4 DEG C	3 x 40 ml	[x]	
[x] BTC		HCL/4 DEG C	1 x 40 ml	[x]	
[x] BTC		4 DEG C	4 x 40 ml	[x]	
[x] BTC		4 DEG C	1 x 250 ml	[x]	
[ ]				[ ]	
[ ]				[ ]	
[ ]				[ ]	
[ ]				[ ]	
[ ]				[ ]	
[ ]				[ ]	
[ ]				[ ]	

PURGE WATER DESCRIPTION: clear, moderate bio odor

PURGE WATER CONTAINERIZED: Pour back into well

NUMBER OF BUCKETS GENERATED:

NOTES
Note 1: pump in well and operating.

SIGNATURE: **DAJ**

FIELD DATA RECORD - LOW FLOW GROUNDWATER SAMPLING

PROJECT	**RA-008**	JOB NUMBER	N/A
WELL ID	**REW-4-20130328-01**	DATE	28-Mar-13
TIME	START 1300 END 1330		

Innovative Engineering Solutions, Inc.
25 Spring Street
Walpole Massachusetts 02081

WATER LEVEL/PUMP SETTINGS

MEASUREMENT POINT
- [x] TOP OF WELL RISER
- [ ] TOP OF PROTECTIVE CASING
- [ ] OTHER

PROTECTIVE CASING STICKUP (FROM GROUND): FT

PROTECTIVE CASING/WELL DIFFERENCE: FT

INITIAL DEPTH TO WATER: Note 1 FT

WELL DEPTH: Note 1 FT

WELL DIAMETER: 2 IN

FINAL DEPTH TO WATER: Note 1 FT

SCREEN LENGTH: FT

PID AMBIENT AIR: NA PPM

DRAWDOWN VOLUME: Note 1 GAL
(initial - final x 0.163 {2-inch} or x 0.654 {4-inch})

PID WELL MOUTH: NA PPM

TOTAL VOLUME PURGED: 1.56 GAL
(purge rate (milliliters per minute) x time duration (minutes) x 0.00026 gal/millilter)

WELL INTEGRITY	YES	NO	N/A
CAP	[x]	[ ]	[ ]
CASING	[x]	[ ]	[ ]
LOCKED	[ ]	[x]	[ ]
COLLAR	[ ]	[ ]	[x]

PURGE DATA

TIME	DEPTH TO WATER (ft)	PURGE RATE (ml/min)	TEMP (deg C)	SPECIFIC CONDUCTANCE (mg/cm)	pH (units)	DISS. O_2 (mg/L)	TURBIDITY (ntu)	REDOX (mv)	COMMENTS
1310	Note 1	200	11.35	394	6.65	1.47	N/A	-76.8	
1315	Note 1	200	11.43	354	6.65	0.96	N/A	-75.3	
1320	Note 1	200	11.52	355	6.65	0.96	N/A	-77.5	
1325	Note 1	200	11.53	358	6.65	0.94	N/A	-79.3	
							N/A		
							N/A		
							N/A		
							N/A		
							N/A		
							N/A		
							N/A		
							N/A		
							N/A		Sampled @ 1325

EQUIPMENT DOCUMENTATION

TYPE OF PUMP	TYPE OF TUBING	TYPE OF PUMP MATERIAL
GEO 2	SILICON/ POLY	Peristaltic

ANALYTICAL PARAMETERS

	METHOD NUMBER	PRESERVATION METHOD	VOLUME REQUIRED	SAMPLE COLLECTED	SAMPLE RESULTS
[x] TA	8260B	HCL/4 DEG C	3 x 40 ml	[x]	
[x] BTC		HCL/4 DEG C	1 x 40 ml	[x]	
[x] BTC		4 DEG C	4 x 40 ml	[x]	
[x] BTC		4 DEG C	1 x 250 ml	[x]	
[ ]				[ ]	
[ ]				[ ]	
[ ]				[ ]	
[ ]				[ ]	
[ ]				[ ]	
[ ]				[ ]	
[ ]				[ ]	

PURGE WATER DESCRIPTION: clear, moderate bio odor

PURGE WATER CONTAINERIZED: Pour back into well

NUMBER OF BUCKETS GENERATED:

NOTES
Note 1: pump in well and operating.

SIGNATURE: **DAJ**

FIELD DATA RECORD - LOW FLOW GROUNDWATER SAMPLING

PROJECT	**RA-008**	JOB NUMBER	N/A
WELL ID	**REW-5-20130328-01**	DATE	28-Mar-13
TIME	START 1335 END 1405		

Innovative Engineering Solutions, Inc.
25 Spring Street
Walpole Massachusetts 02081

WATER LEVEL/PUMP SETTINGS

MEASUREMENT POINT
- [x] TOP OF WELL RISER
- [ ] TOP OF PROTECTIVE CASING
- [ ] OTHER

PROTECTIVE CASING STICKUP (FROM GROUND): FT

PROTECTIVE CASING/WELL DIFFERENCE: FT

INITIAL DEPTH TO WATER: Note 1 FT

WELL DEPTH: Note 1 FT

WELL DIAMETER: 2 IN

FINAL DEPTH TO WATER: Note 1 FT

SCREEN LENGTH: FT

PID AMBIENT AIR: NA PPM

DRAWDOWN VOLUME: Note 1 GAL
(initial - final x 0.163 {2-inch} or x 0.654 {4-inch})

PID WELL MOUTH: NA PPM

TOTAL VOLUME PURGED: 1.56 GAL
(purge rate (milliliters per minute) x time duration (minutes) x 0.00026 gal/millilter)

WELL INTEGRITY	YES	NO	N/A
CAP	[x]	[ ]	[ ]
CASING	[x]	[ ]	[ ]
LOCKED	[ ]	[x]	[ ]
COLLAR	[ ]	[ ]	[x]

PURGE DATA

TIME	DEPTH TO WATER (ft)	PURGE RATE (ml/min)	TEMP (deg C)	SPECIFIC CONDUCTANCE (mg/cm)	pH (units)	DISS. O_2 (mg/L)	TURBIDITY (ntu)	REDOX (mv)	COMMENTS
1345	Note 1	200	10.56	466	6.57	0.66	N/A	-80.5	
1350	Note 1	200	10.65	456	6.57	0.59	N/A	-78.6	
1355	Note 1	200	10.57	453	6.58	0.60	N/A	-78.7	
1400	Note 1	200	10.54	458	6.57	0.61	N/A	-77.6	
							N/A		
							N/A		
							N/A		
							N/A		
							N/A		
							N/A		
							N/A		
							N/A		
							N/A		Sampled @ 1400

EQUIPMENT DOCUMENTATION

TYPE OF PUMP	TYPE OF TUBING	TYPE OF PUMP MATERIAL
GEO 2	SILICON/ POLY	Peristaltic

ANALYTICAL PARAMETERS

	METHOD NUMBER	PRESERVATION METHOD	VOLUME REQUIRED	SAMPLE COLLECTED	SAMPLE RESULTS
[x] TA	8260B	HCL/4 DEG C	3 x 40 ml	[x]	
[x] BTC		HCL/4 DEG C	1 x 40 ml	[x]	
[x] BTC		4 DEG C	4 x 40 ml	[x]	
[x] BTC		4 DEG C	1 x 250 ml	[x]	
[ ]				[ ]	
[ ]				[ ]	
[ ]				[ ]	
[ ]				[ ]	
[ ]				[ ]	
[ ]				[ ]	
[ ]				[ ]	

PURGE WATER DESCRIPTION: clear, moderate bio odor

PURGE WATER CONTAINERIZED: Pour back into well

NUMBER OF BUCKETS GENERATED:

NOTES
Note 1: pump in well and operating.

SIGNATURE: **DAJ**

FIELD DATA RECORD - LOW FLOW GROUNDWATER SAMPLING

PROJECT	**RA-008**	JOB NUMBER	N/A
WELL ID	**REW-6-20130328-01**	DATE	28-Mar-13
TIME	START 0710 END 0740		

Innovative Engineering Solutions, Inc.
25 Spring Street
Walpole Massachusetts 02081

WATER LEVEL/PUMP SETTINGS

MEASUREMENT POINT
- [x] TOP OF WELL RISER
- [ ] TOP OF PROTECTIVE CASING
- [ ] OTHER

PROTECTIVE CASING STICKUP (FROM GROUND): FT

PROTECTIVE CASING/WELL DIFFERENCE: FT

INITIAL DEPTH TO WATER: Note 1 FT

WELL DEPTH: Note 1 FT

WELL DIAMETER: 2 IN

FINAL DEPTH TO WATER: Note 1 FT

SCREEN LENGTH: FT

PID AMBIENT AIR: NA PPM

DRAWDOWN VOLUME: Note 1 GAL
(initial - final x 0.163 {2-inch} or x 0.654 {4-inch})

PID WELL MOUTH: NA PPM

TOTAL VOLUME PURGED: 1.56 GAL
(purge rate (milliliters per minute) x time duration (minutes) x 0.00026 gal/millilter)

WELL INTEGRITY	YES	NO	N/A
CAP	[x]	[ ]	[ ]
CASING	[x]	[ ]	[ ]
LOCKED	[ ]	[x]	[ ]
COLLAR	[ ]	[ ]	[x]

PURGE DATA

TIME	DEPTH TO WATER (ft)	PURGE RATE (ml/min)	TEMP (deg C)	SPECIFIC CONDUCTANCE (mg/cm)	pH (units)	DISS. O_2 (mg/L)	TURBIDITY (ntu)	REDOX (mv)	COMMENTS
0720	Note 1	200	9.46	264	6.81	0.47	N/A	-79	
0725	Note 1	200	9.59	261	6.79	0.38	N/A	-81.8	
0730	Note 1	200	9.61	258	6.78	0.40	N/A	-79.6	
0735	Note 1	200	9.62	260	6.77	0.42	N/A	-80.1	
							N/A		
							N/A		
							N/A		
							N/A		
							N/A		
							N/A		
							N/A		
							N/A		
							N/A		Sampled @ 0735

EQUIPMENT DOCUMENTATION

TYPE OF PUMP	TYPE OF TUBING	TYPE OF PUMP MATERIAL
GEO 2	SILICON/ POLY	Peristaltic

ANALYTICAL PARAMETERS

	METHOD NUMBER	PRESERVATION METHOD	VOLUME REQUIRED	SAMPLE COLLECTED	SAMPLE RESULTS
[x] TA	8260B	HCL/4 DEG C	3 x 40 ml	[x]	
[x] BTC		HCL/4 DEG C	1 x 40 ml	[x]	
[x] BTC		4 DEG C	4 x 40 ml	[x]	
[x] BTC		4 DEG C	1 x 250 ml	[x]	
[ ]				[ ]	
[ ]				[ ]	
[ ]				[ ]	
[ ]				[ ]	
[ ]				[ ]	
[ ]				[ ]	
[ ]				[ ]	

PURGE WATER DESCRIPTION: clear, no odor

PURGE WATER CONTAINERIZED: Pour back into well

NUMBER OF BUCKETS GENERATED:

NOTES
Note 1: pump in well and operating.

SIGNATURE: **DAJ**

FIELD DATA RECORD - LOW FLOW GROUNDWATER SAMPLING

PROJECT	**RA-008**	JOB NUMBER	N/A
WELL ID	**REW-7-20130401-01**	DATE	1-Apr-13
TIME	START 0930 END 1000		

Innovative Engineering Solutions, Inc.
25 Spring Street
Walpole Massachusetts 02081

WATER LEVEL/PUMP SETTINGS

MEASUREMENT POINT
- [x] TOP OF WELL RISER
- [ ] TOP OF PROTECTIVE CASING
- [ ] OTHER

PROTECTIVE CASING STICKUP (FROM GROUND): FT

PROTECTIVE CASING/WELL DIFFERENCE: FT

INITIAL DEPTH TO WATER: Note 1 FT

WELL DEPTH: Note 1 FT

WELL DIAMETER: 2 IN

FINAL DEPTH TO WATER: Note 1 FT

SCREEN LENGTH: FT

PID AMBIENT AIR: NA PPM

DRAWDOWN VOLUME: Note 1 GAL
(initial - final x 0.163 {2-inch} or x 0.654 {4-inch})

PID WELL MOUTH: NA PPM

TOTAL VOLUME PURGED: 1.56 GAL
(purge rate (milliliters per minute) x time duration (minutes) x 0.00026 gal/millilter)

WELL INTEGRITY	YES	NO	N/A
CAP	[x]	[ ]	[ ]
CASING	[x]	[ ]	[ ]
LOCKED	[ ]	[x]	[ ]
COLLAR	[ ]	[ ]	[x]

PURGE DATA

TIME	DEPTH TO WATER (ft)	PURGE RATE (ml/min)	TEMP (deg C)	SPECIFIC CONDUCTANCE (mg/cm)	pH (units)	DISS. O_2 (mg/L)	TURBIDITY (ntu)	REDOX (mv)	COMMENTS
0940	Note 1	200	10.87	242	6.82	0.31	N/A	-96.9	
0945	Note 1	200	11.09	214	6.78	0.29	N/A	-101.1	
0950	Note 1	200	11.41	210	6.76	0.30	N/A	-100.8	
0955	Note 1	200	11.10	227	6.74	0.28	N/A	-100.7	
							N/A		
							N/A		
							N/A		
							N/A		
							N/A		
							N/A		
							N/A		
							N/A		
							N/A		Sampled @ 0955

EQUIPMENT DOCUMENTATION

TYPE OF PUMP	TYPE OF TUBING	TYPE OF PUMP MATERIAL
GEO 2	SILICON/ POLY	Peristaltic

ANALYTICAL PARAMETERS

	METHOD NUMBER	PRESERVATION METHOD	VOLUME REQUIRED	SAMPLE COLLECTED	SAMPLE RESULTS
[x] TA	8260B	HCL/4 DEG C	3 x 40 ml	[x]	
[x] BTC		HCL/4 DEG C	1 x 40 ml	[x]	
[x] BTC		4 DEG C	4 x 40 ml	[x]	
[x] BTC		4 DEG C	1 x 250 ml	[x]	
[ ]				[ ]	
[ ]				[ ]	
[ ]				[ ]	
[ ]				[ ]	
[ ]				[ ]	
[ ]				[ ]	
[ ]				[ ]	

PURGE WATER DESCRIPTION: clear, no odor

PURGE WATER CONTAINERIZED: Pour back into well

NUMBER OF BUCKETS GENERATED:

NOTES
Note 1: pump in well and operating.

SIGNATURE: **DAJ**

FIELD DATA RECORD - LOW FLOW GROUNDWATER SAMPLING

PROJECT	**RA-008**	JOB NUMBER	N/A
WELL ID	**REW-8-20130328-01**	DATE	28-Mar-13
TIME	START 0830 END 0905		

Innovative Engineering Solutions, Inc.
25 Spring Street
Walpole Massachusetts 02081

WATER LEVEL/PUMP SETTINGS

MEASUREMENT POINT
- [x] TOP OF WELL RISER
- [ ] TOP OF PROTECTIVE CASING
- [ ] OTHER

PROTECTIVE CASING STICKUP (FROM GROUND): FT

PROTECTIVE CASING/WELL DIFFERENCE: FT

INITIAL DEPTH TO WATER: Note 1 FT

WELL DEPTH: Note 1 FT

WELL DIAMETER: 2 IN

FINAL DEPTH TO WATER: Note 1 FT

SCREEN LENGTH: FT

PID AMBIENT AIR: NA PPM

DRAWDOWN VOLUME: Note 1 GAL
(initial - final x 0.163 {2-inch} or x 0.654 {4-inch})

PID WELL MOUTH: NA PPM

TOTAL VOLUME PURGED: 1.82 GAL
(purge rate (milliliters per minute) x time duration (minutes) x 0.00026 gal/millilter)

WELL INTEGRITY	YES	NO	N/A
CAP	✓		
CASING	✓		
LOCKED		✓	
COLLAR			✓

PURGE DATA

TIME	DEPTH TO WATER (ft)	PURGE RATE (ml/min)	TEMP (deg C)	SPECIFIC CONDUCTANCE (mg/cm)	pH (units)	DISS. O_2 (mg/L)	TURBIDITY (ntu)	REDOX (mv)	COMMENTS
0840	Note 1	200	10.03	250	6.80	0.45	N/A	-100.7	DupX1-20130328-01
0845	Note 1	200	9.99	251	6.77	0.36	N/A	-103.6	
0850	Note 1	200	10.25	251	6.73	0.34	N/A	-105.1	
0855	Note 1	200	10.14	252	6.72	0.32	N/A	-106.5	
							N/A		
							N/A		
							N/A		
							N/A		
							N/A		
							N/A		
							N/A		
							N/A		
							N/A		Sampled @ 0735

EQUIPMENT DOCUMENTATION

TYPE OF PUMP	TYPE OF TUBING	TYPE OF PUMP MATERIAL
GEO 2	SILICON/ POLY	Peristaltic

ANALYTICAL PARAMETERS

	METHOD NUMBER	PRESERVATION METHOD	VOLUME REQUIRED	SAMPLE COLLECTED	SAMPLE RESULTS
[x] TA	8260B	HCL/4 DEG C	3 x 40 ml	[x]	
[x] BTC		HCL/4 DEG C	1 x 40 ml	[x]	
[x] BTC		4 DEG C	4 x 40 ml	[x]	
[x] BTC		4 DEG C	1 x 250 ml	[x]	
[ ]				[ ]	
[ ]				[ ]	
[ ]				[ ]	
[ ]				[ ]	
[ ]				[ ]	
[ ]				[ ]	
[ ]				[ ]	

PURGE WATER DESCRIPTION: clear, no odor

PURGE WATER CONTAINERIZED: Pour back into well

NUMBER OF BUCKETS GENERATED: DupX1-20130328-01

NOTES
Note 1: pump in well and operating.

SIGNATURE: **DAJ**

FIELD DATA RECORD - LOW FLOW GROUNDWATER SAMPLING

PROJECT	**RA-008**	JOB NUMBER	N/A
WELL ID	**REW-9-20130328-01**	DATE	28-Mar-13
TIME	START 0950 END 1035		

Innovative Engineering Solutions, Inc.
25 Spring Street
Walpole Massachusetts 02081

WATER LEVEL/PUMP SETTINGS

MEASUREMENT POINT
- [x] TOP OF WELL RISER
- [ ] TOP OF PROTECTIVE CASING
- [ ] OTHER

PROTECTIVE CASING STICKUP (FROM GROUND): FT

PROTECTIVE CASING/WELL DIFFERENCE: FT

INITIAL DEPTH TO WATER: Note 1 FT

WELL DEPTH: Note 1 FT

WELL DIAMETER: 2 IN

FINAL DEPTH TO WATER: Note 1 FT

SCREEN LENGTH: FT

PID AMBIENT AIR: NA PPM

DRAWDOWN VOLUME: Note 1 GAL
(initial - final x 0.163 {2-inch} or x 0.654 {4-inch})

PID WELL MOUTH: NA PPM

TOTAL VOLUME PURGED: 2.34 GAL
(purge rate (milliliters per minute) x time duration (minutes) x 0.00026 gal/millilter)

WELL INTEGRITY	YES	NO	N/A
CAP	✓		
CASING	✓		
LOCKED		✓	
COLLAR			✓

PURGE DATA

TIME	DEPTH TO WATER (ft)	PURGE RATE (ml/min)	TEMP (deg C)	SPECIFIC CONDUCTANCE (mg/cm)	pH (units)	DISS. O_2 (mg/L)	TURBIDITY (ntu)	REDOX (mv)	COMMENTS
1000	Note 1	200	10.46	285	6.75	0.36	N/A	-99.8	
1005	Note 1	200	10.60	275	6.77	0.28	N/A	-107.3	
1010	Note 1	200	10.63	253	6.82	0.30	N/A	-113.4	
1015	Note 1	200	10.07	232	6.84	0.31	N/A	-115.6	
1020	Note 1	200	10.64	304	6.74	032.	N/A	-110.4	
1025	Note 1	200	10.52	292	6.75	0.30	N/A	-113.1	
1030	Note 1	200	10.65	291	6.76	0.31	N/A	-114.8	
							N/A		
							N/A		
							N/A		
							N/A		
							N/A		
							N/A		Sampled @ 1030

EQUIPMENT DOCUMENTATION

TYPE OF PUMP	TYPE OF TUBING	TYPE OF PUMP MATERIAL
GEO 2	SILICON/ POLY	Peristaltic

ANALYTICAL PARAMETERS

	METHOD NUMBER	PRESERVATION METHOD	VOLUME REQUIRED	SAMPLE COLLECTED	SAMPLE RESULTS
[x] TA	8260B	HCL/4 DEG C	3 x 40 ml	[x]	
[x] BTC		HCL/4 DEG C	1 x 40 ml	[x]	
[x] BTC		4 DEG C	4 x 40 ml	[x]	
[x] BTC		4 DEG C	1 x 250 ml	[x]	
[ ]				[ ]	
[ ]				[ ]	
[ ]				[ ]	
[ ]				[ ]	
[ ]				[ ]	
[ ]				[ ]	
[ ]				[ ]	

PURGE WATER DESCRIPTION: clear, no odor

PURGE WATER CONTAINERIZED: Pour back into well

NUMBER OF BUCKETS GENERATED:

NOTES
Note 1: pump in well and operating.

SIGNATURE: **DAJ**

FIELD DATA RECORD - LOW FLOW GROUNDWATER SAMPLING

PROJECT	**RA-008**	JOB NUMBER	N/A
WELL ID	**REW-10-20130328-01**	DATE	28-Mar-13
TIME	START 0905 END 0950		

Innovative Engineering Solutions, Inc.
25 Spring Street
Walpole Massachusetts 02081

WATER LEVEL/PUMP SETTINGS

MEASUREMENT POINT
- [x] TOP OF WELL RISER
- [ ] TOP OF PROTECTIVE CASING
- [ ] OTHER

PROTECTIVE CASING STICKUP (FROM GROUND): FT

PROTECTIVE CASING/WELL DIFFERENCE: FT

INITIAL DEPTH TO WATER: Note 1 FT

WELL DEPTH: Note 1 FT

WELL DIAMETER: 2 IN

FINAL DEPTH TO WATER: Note 1 FT

SCREEN LENGTH: FT

PID AMBIENT AIR: NA PPM

DRAWDOWN VOLUME: Note 1 GAL
(initial - final x 0.163 {2-inch} or x 0.654 {4-inch})

PID WELL MOUTH: NA PPM

TOTAL VOLUME PURGED: 2.34 GAL
(purge rate (milliliters per minute) x time duration (minutes) x 0.00026 gal/millilter)

WELL INTEGRITY	YES	NO	N/A
CAP	✓		
CASING	✓		
LOCKED		✓	
COLLAR			✓

PURGE DATA

TIME	DEPTH TO WATER (ft)	PURGE RATE (ml/min)	TEMP (deg C)	SPECIFIC CONDUCTANCE (mg/cm)	pH (units)	DISS. O_2 (mg/L)	TURBIDITY (ntu)	REDOX (mv)	COMMENTS
0915	Note 1	200	7.36	265	5.95	0.41	N/A	-44.3	
0920	Note 1	200	7.58	266	6.31	0.32	N/A	-69.4	
0925	Note 1	200	7.53	266	6.55	0.34	N/A	-86.7	
0930	Note 1	200	9.92	284	7.03	0.27	N/A	-123.7	
0935	Note 1	200	9.66	283	7.41	0.30	N/A	-136.2	
0940	Note 1	200	9.87	286	7.42	0.28	N/A	-138.2	
0945	Note 1	200	9.93	286	7.40	0.26	N/A	-135.4	
							N/A		
							N/A		
							N/A		
							N/A		
							N/A		
							N/A		Sampled @ 0945

EQUIPMENT DOCUMENTATION

TYPE OF PUMP	TYPE OF TUBING	TYPE OF PUMP MATERIAL
GEO 2	SILICON/ POLY	Peristaltic

ANALYTICAL PARAMETERS

	METHOD NUMBER	PRESERVATION METHOD	VOLUME REQUIRED	SAMPLE COLLECTED	SAMPLE RESULTS
[x] TA	8260B	HCL/4 DEG C	3 x 40 ml	[x]	
[x] BTC		HCL/4 DEG C	1 x 40 ml	[x]	
[x] BTC		4 DEG C	4 x 40 ml	[x]	
[x] BTC		4 DEG C	1 x 250 ml	[x]	
[ ]				[ ]	
[ ]				[ ]	
[ ]				[ ]	
[ ]				[ ]	
[ ]				[ ]	
[ ]				[ ]	
[ ]				[ ]	

PURGE WATER DESCRIPTION: clear, no odor

PURGE WATER CONTAINERIZED: Pour back into well

NUMBER OF BUCKETS GENERATED:

NOTES
Note 1: pump in well and operating.

SIGNATURE: **DAJ**

FIELD DATA RECORD - LOW FLOW GROUNDWATER SAMPLING

PROJECT	**RA-008**	JOB NUMBER	N/A
WELL ID	**REW-11-20130328-01**	DATE	28-Mar-13
TIME	START 0740 END 0810		

Innovative Engineering Solutions, Inc.
25 Spring Street
Walpole Massachusetts 02081

WATER LEVEL/PUMP SETTINGS

MEASUREMENT POINT
- [x] TOP OF WELL RISER
- [ ] TOP OF PROTECTIVE CASING
- [ ] OTHER

PROTECTIVE CASING STICKUP (FROM GROUND): FT

PROTECTIVE CASING/WELL DIFFERENCE: FT

INITIAL DEPTH TO WATER: Note 1 FT

WELL DEPTH: Note 1 FT

WELL DIAMETER: 2 IN

FINAL DEPTH TO WATER: Note 1 FT

SCREEN LENGTH: FT

PID AMBIENT AIR: NA PPM

DRAWDOWN VOLUME: Note 1 GAL
(initial - final x 0.163 {2-inch} or x 0.654 {4-inch})

PID WELL MOUTH: NA PPM

TOTAL VOLUME PURGED: 1.56 GAL
(purge rate (milliliters per minute) x time duration (minutes) x 0.00026 gal/millilter)

WELL INTEGRITY	YES	NO	N/A
CAP	[x]	[ ]	[ ]
CASING	[x]	[ ]	[ ]
LOCKED	[ ]	[x]	[ ]
COLLAR	[ ]	[ ]	[x]

PURGE DATA

TIME	DEPTH TO WATER (ft)	PURGE RATE (ml/min)	TEMP (deg C)	SPECIFIC CONDUCTANCE (mg/cm)	pH (units)	DISS. O_2 (mg/L)	TURBIDITY (ntu)	REDOX (mv)	COMMENTS
0750	Note 1	200	9.21	222	6.75	0.38	N/A	-86.2	
0755	Note 1	200	9.17	221	6.75	0.30	N/A	-89.9	
0800	Note 1	200	9.30	219	6.76	0.31	N/A	-92.6	
0805	Note 1	200	9.21	219	6.75	0.30	N/A	-94	
							N/A		
							N/A		
							N/A		
							N/A		
							N/A		
							N/A		
							N/A		
							N/A		
							N/A		Sampled @ 0805

EQUIPMENT DOCUMENTATION

TYPE OF PUMP	TYPE OF TUBING	TYPE OF PUMP MATERIAL
GEO 2	SILICON/ POLY	Peristaltic

ANALYTICAL PARAMETERS

	METHOD NUMBER	PRESERVATION METHOD	VOLUME REQUIRED	SAMPLE COLLECTED	SAMPLE RESULTS
[x] TA	8260B	HCL/4 DEG C	3 x 40 ml	[x]	
[x] BTC		HCL/4 DEG C	1 x 40 ml	[x]	
[x] BTC		4 DEG C	4 x 40 ml	[x]	
[x] BTC		4 DEG C	1 x 250 ml	[x]	
[ ]				[ ]	
[ ]				[ ]	
[ ]				[ ]	
[ ]				[ ]	
[ ]				[ ]	
[ ]				[ ]	
[ ]				[ ]	

PURGE WATER DESCRIPTION: clear, slight bio odor

PURGE WATER CONTAINERIZED: Pour back into well

NUMBER OF BUCKETS GENERATED:

NOTES
Note 1: pump in well and operating.

SIGNATURE: **DAJ**

FIELD DATA RECORD - LOW FLOW GROUNDWATER SAMPLING

PROJECT	**RA-008**	JOB NUMBER	N/A
WELL ID	**REW-12-20130328-01**	DATE	28-Mar-13
TIME	START 1120 END 1155		

Innovative Engineering Solutions, Inc.
25 Spring Street
Walpole Massachusetts 02081

WATER LEVEL/PUMP SETTINGS

MEASUREMENT POINT
- [x] TOP OF WELL RISER
- [ ] TOP OF PROTECTIVE CASING
- [ ] OTHER

PROTECTIVE CASING STICKUP (FROM GROUND): FT

PROTECTIVE CASING/WELL DIFFERENCE: FT

INITIAL DEPTH TO WATER: Note 1 FT

WELL DEPTH: Note 1 FT

WELL DIAMETER: 2 IN

FINAL DEPTH TO WATER: Note 1 FT

SCREEN LENGTH: FT

PID AMBIENT AIR: NA PPM

DRAWDOWN VOLUME: Note 1 GAL
(initial - final x 0.163 {2-inch} or x 0.654 {4-inch})

PID WELL MOUTH: NA PPM

TOTAL VOLUME PURGED: 1.82 GAL
(purge rate (milliliters per minute) x time duration (minutes) x 0.00026 gal/millilter)

WELL INTEGRITY	YES	NO	N/A
CAP	[x]	[ ]	[ ]
CASING	[x]	[ ]	[ ]
LOCKED	[ ]	[x]	[ ]
COLLAR	[ ]	[ ]	[x]

PURGE DATA

TIME	DEPTH TO WATER (ft)	PURGE RATE (ml/min)	TEMP (deg C)	SPECIFIC CONDUCTANCE (mg/cm)	pH (units)	DISS. O_2 (mg/L)	TURBIDITY (ntu)	REDOX (mv)	COMMENTS
1130	Note 1	200	10.29	255	6.48	0.40	N/A	-84	
1135	Note 1	200	10.32	256	6.54	0.35	N/A	-84.3	
1140	Note 1	200	10.35	254	6.55	0.25	N/A	-84.3	
1145	Note 1	200	10.41	255	6.56	0.26	N/A	-86.3	
1150	Note 1	200	10.38	256	6.57	0.27	N/A	-89.5	
							N/A		
							N/A		
							N/A		
							N/A		
							N/A		
							N/A		
							N/A		
							N/A		Sampled @ 1150

EQUIPMENT DOCUMENTATION

TYPE OF PUMP	TYPE OF TUBING	TYPE OF PUMP MATERIAL
GEO 2	SILICON/ POLY	Peristaltic

ANALYTICAL PARAMETERS

	METHOD NUMBER	PRESERVATION METHOD	VOLUME REQUIRED	SAMPLE COLLECTED	SAMPLE RESULTS
[x] TA	8260B	HCL/4 DEG C	3 x 40 ml	[x]	
[x] BTC		HCL/4 DEG C	1 x 40 ml	[x]	
[x] BTC		4 DEG C	4 x 40 ml	[x]	
[x] BTC		4 DEG C	1 x 250 ml	[x]	
[ ]				[ ]	
[ ]				[ ]	
[ ]				[ ]	
[ ]				[ ]	
[ ]				[ ]	
[ ]				[ ]	
[ ]				[ ]	

PURGE WATER DESCRIPTION: clear, slight bio odor

PURGE WATER CONTAINERIZED: Pour back into well

NUMBER OF BUCKETS GENERATED:

NOTES
Note 1: pump in well and operating.

SIGNATURE: **DAJ**

Northern Area Remediation Monitoring Data
MW-562
Former Raytheon Facility, Wayland, MA

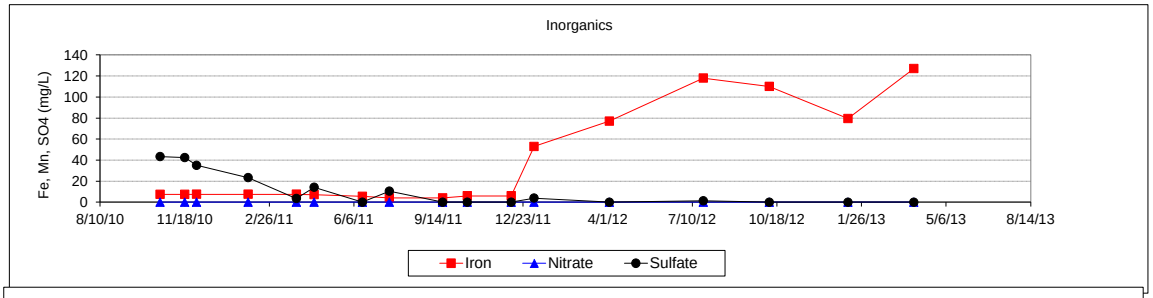

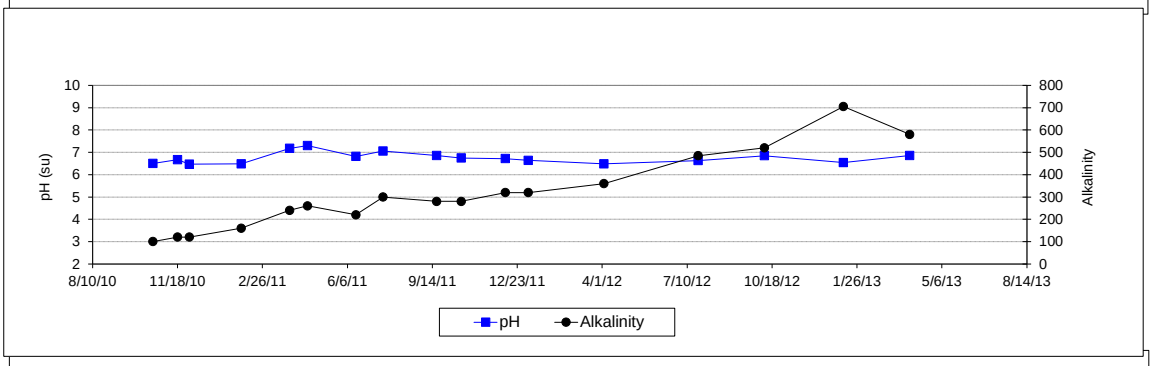

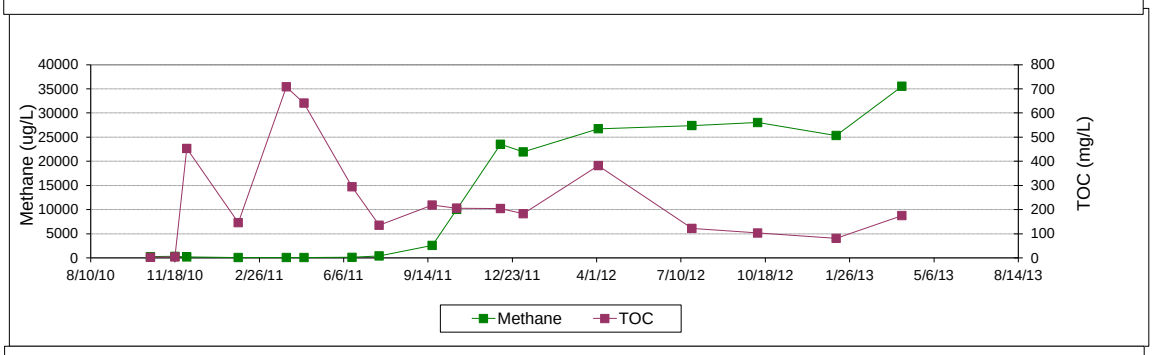

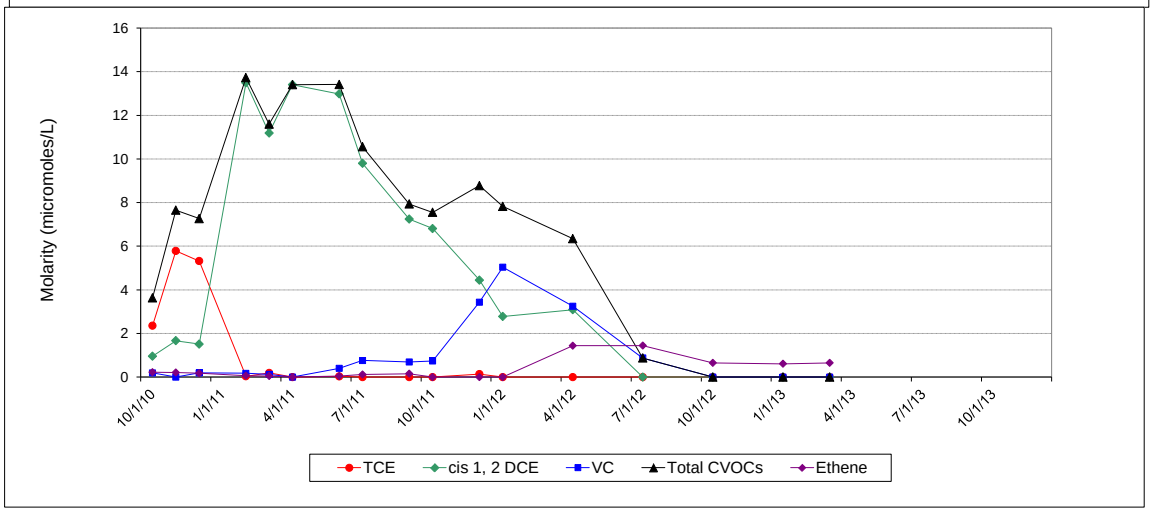

Northern Area Remediation Monitoring Data
REW-1
Former Raytheon Facility, Wayland, MA

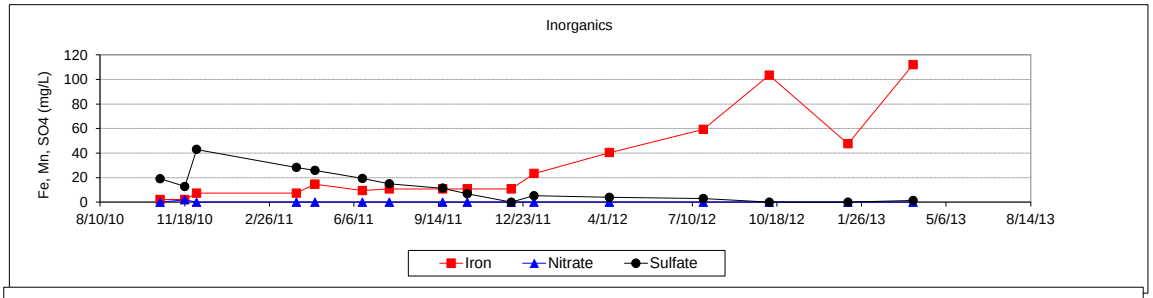

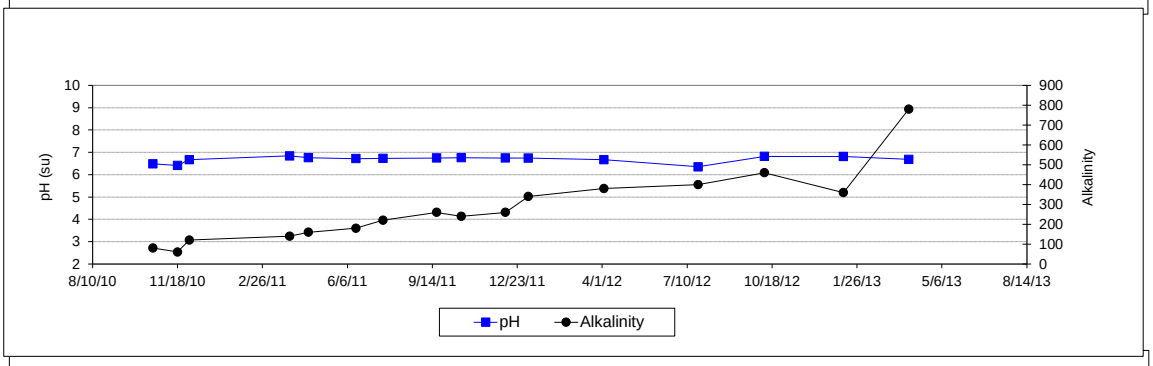

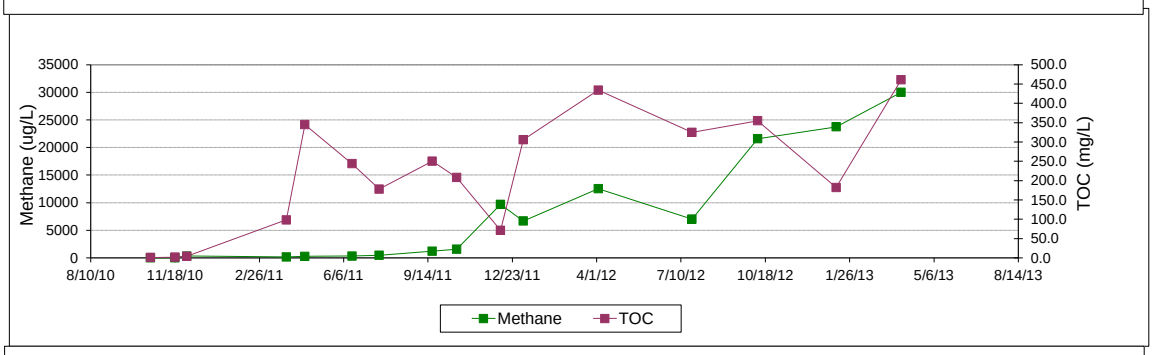

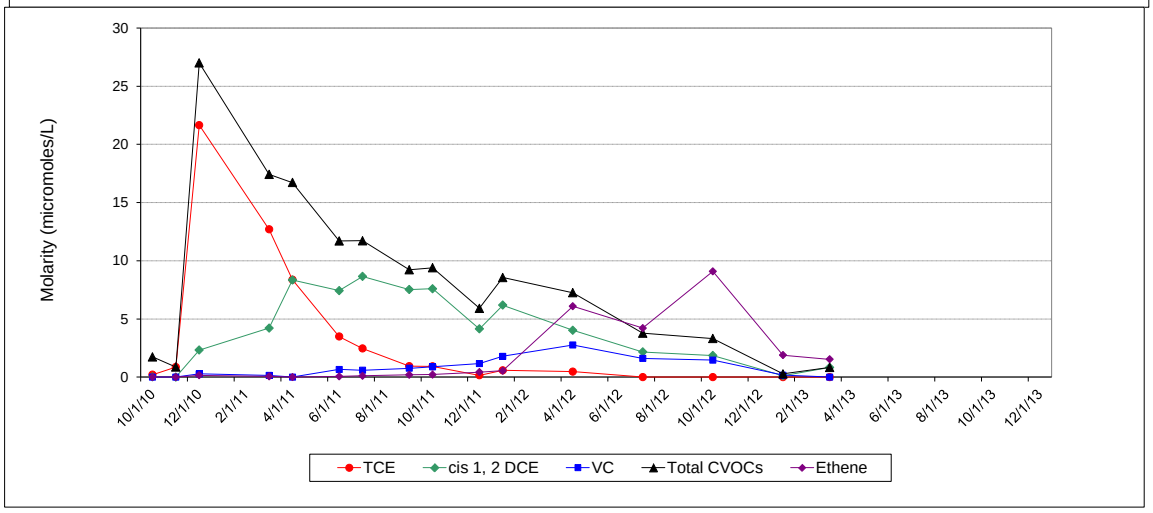

Northern Area Remediation Monitoring Data
MW-265M
Former Raytheon Facility, Wayland, MA

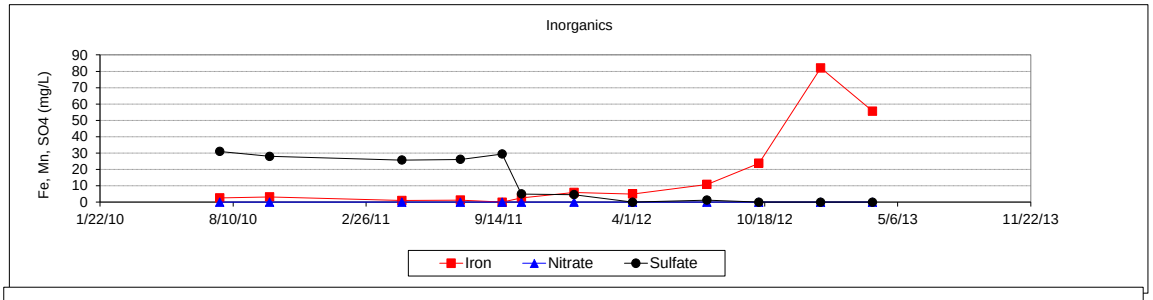

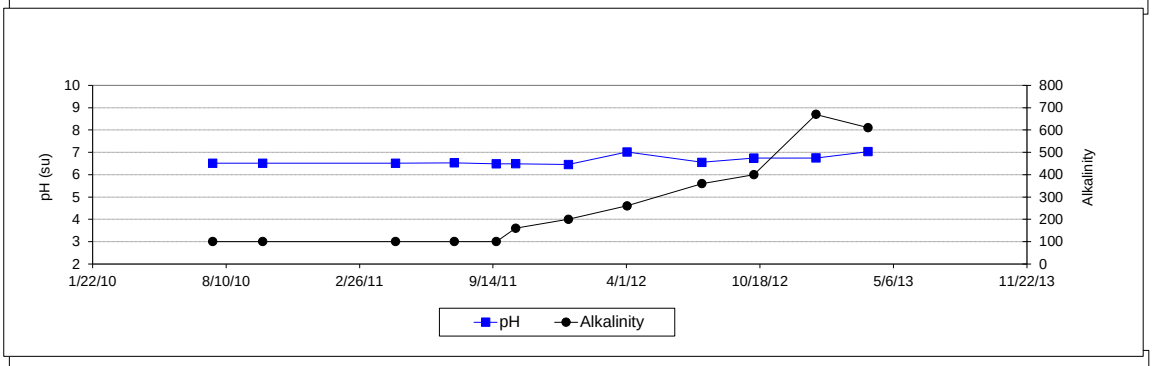

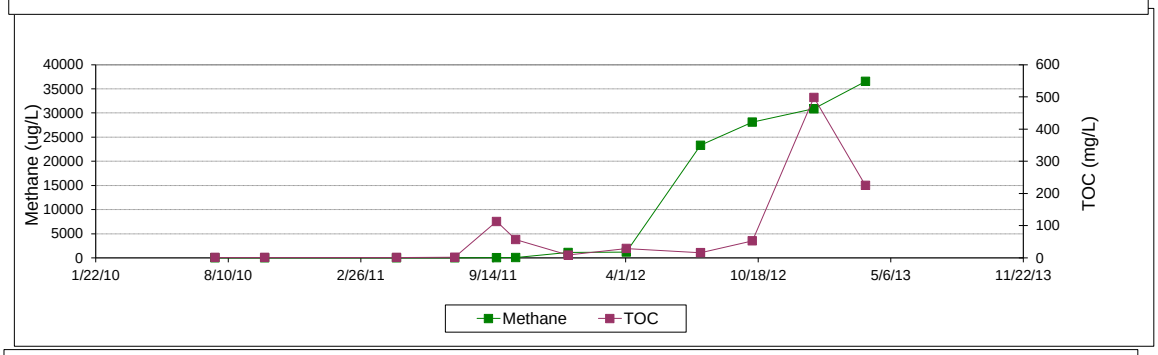

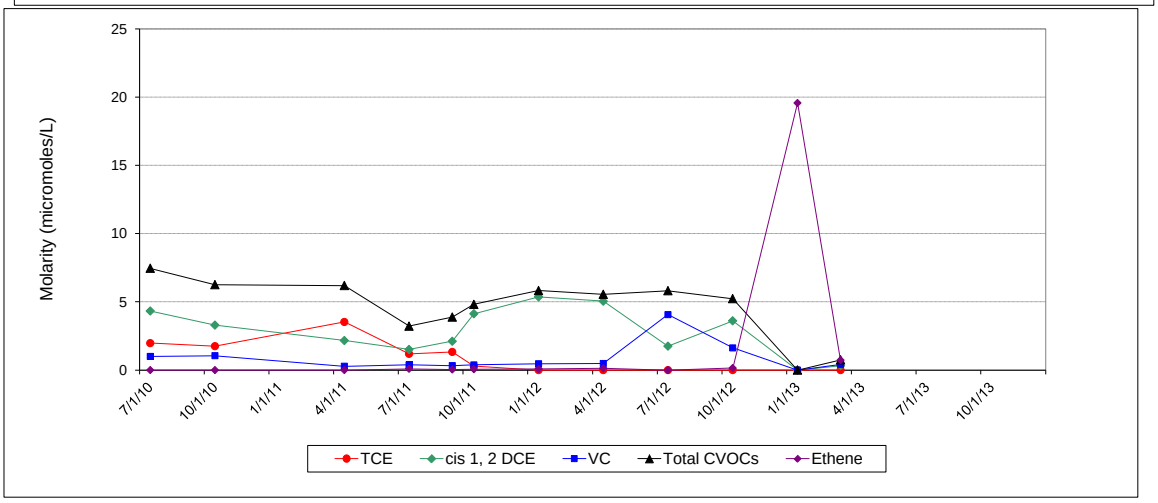

Northern Area Remediation Monitoring Data
REW-4
Former Raytheon Facility, Wayland, MA

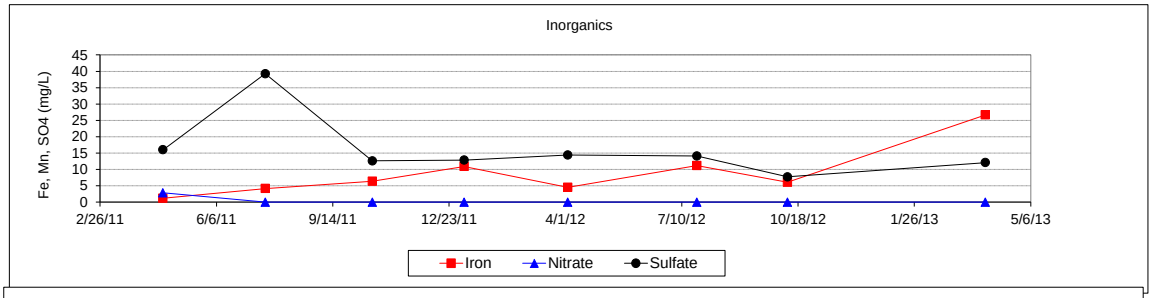

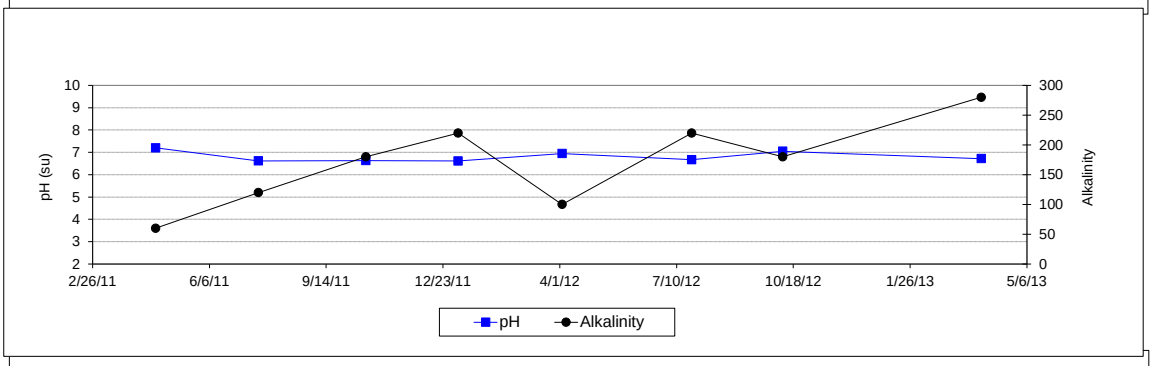

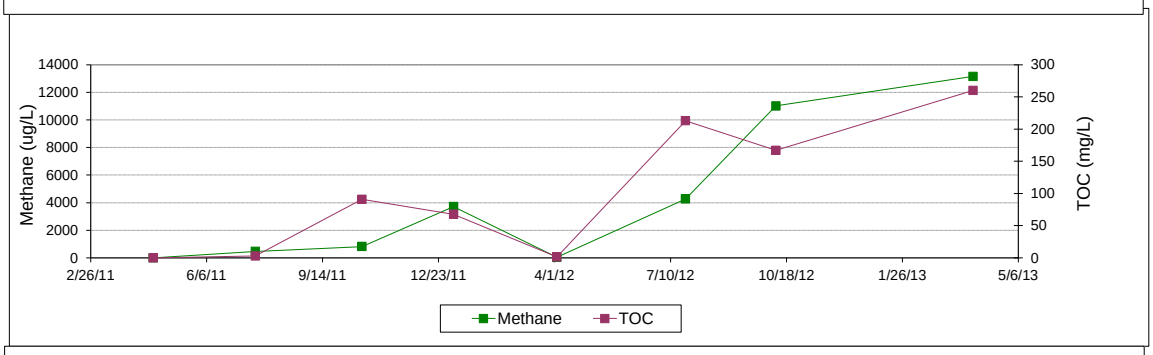

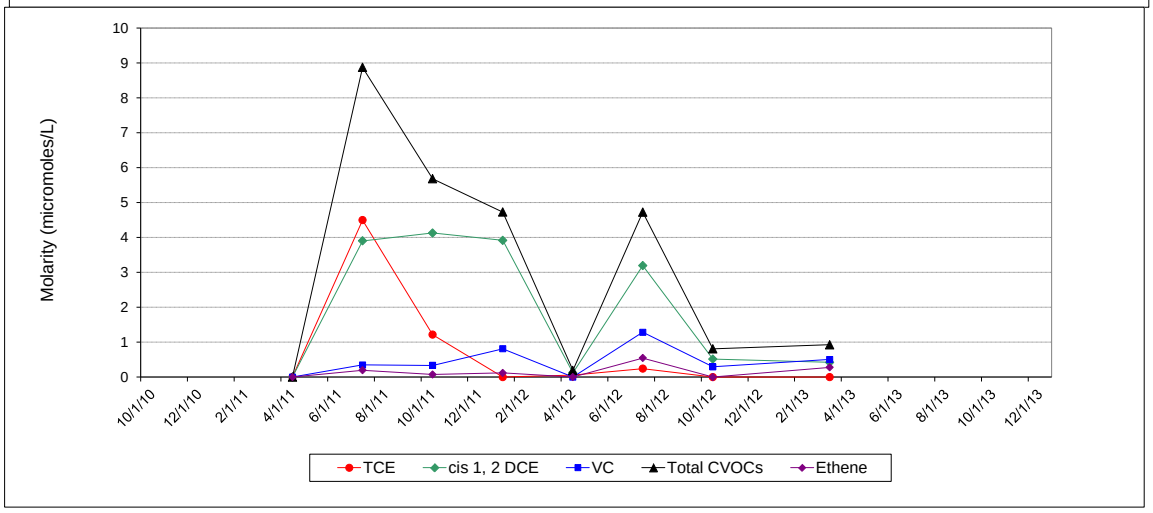

Northern Area Remediation Monitoring Data
REW-5
Former Raytheon Facility, Wayland, MA

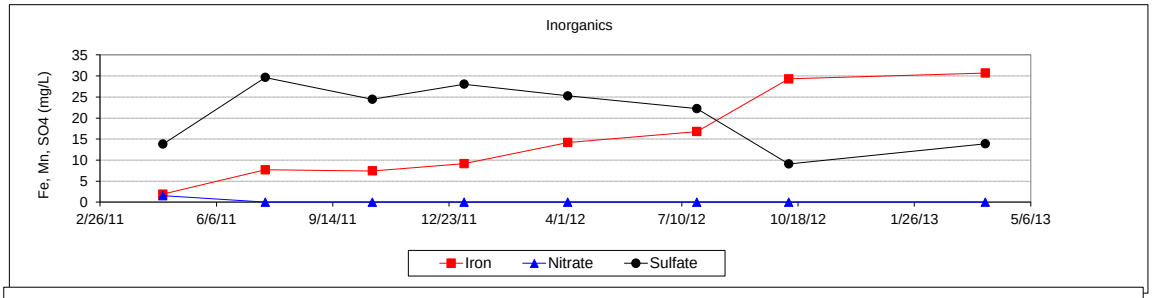

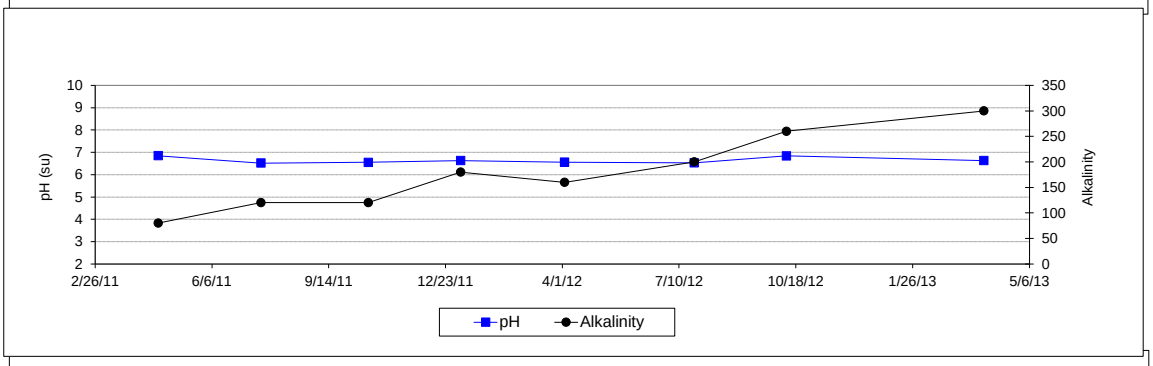

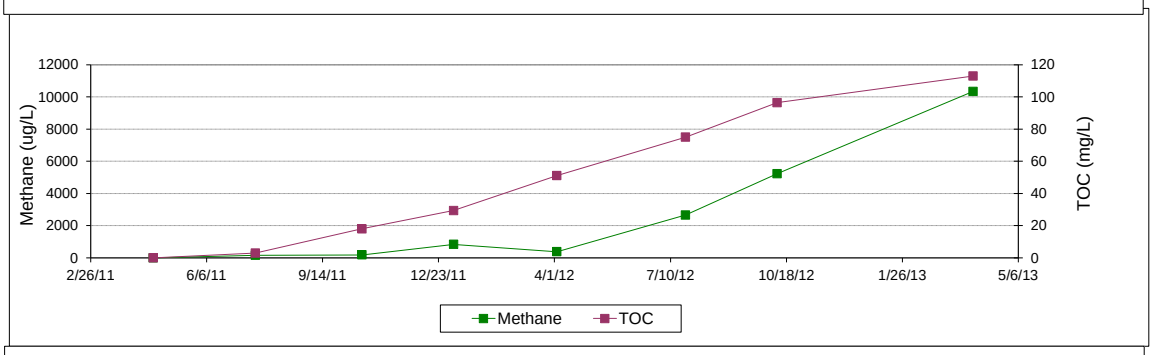

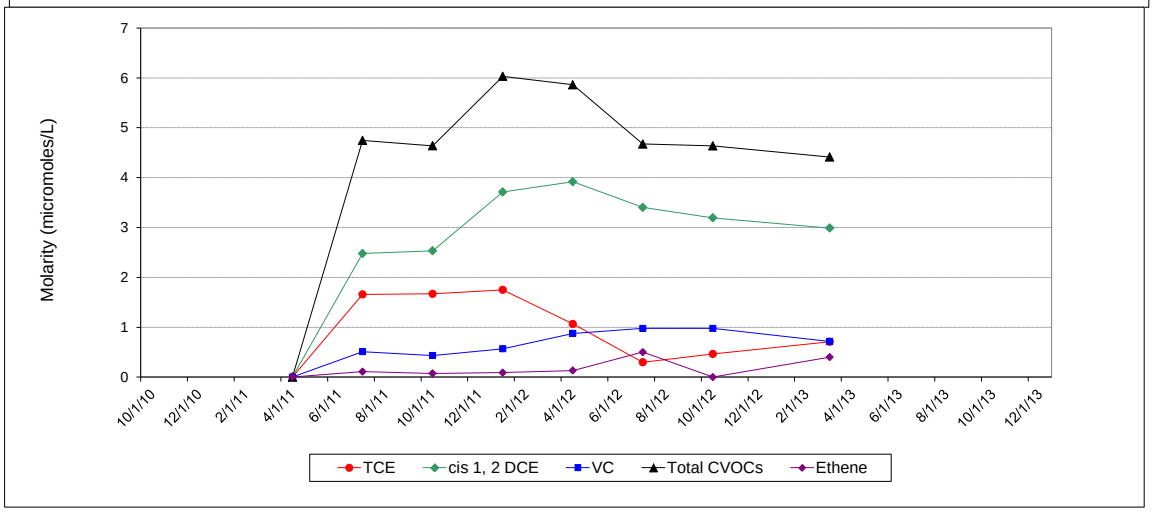

Northern Area Remediation Monitoring Data
MW-551
Former Raytheon Facility, Wayland, MA

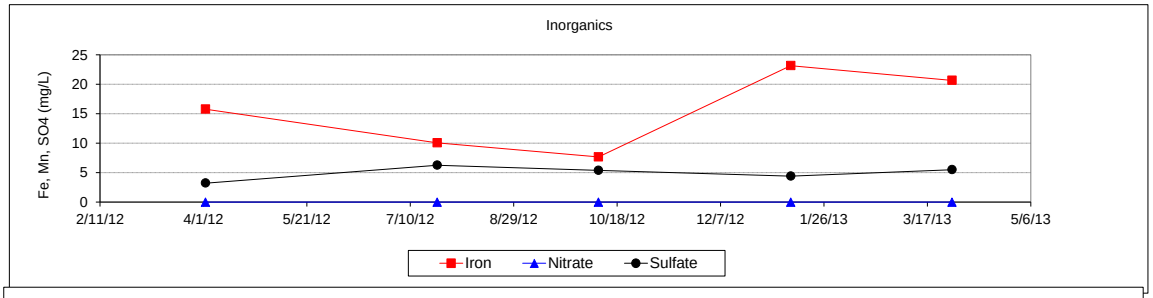

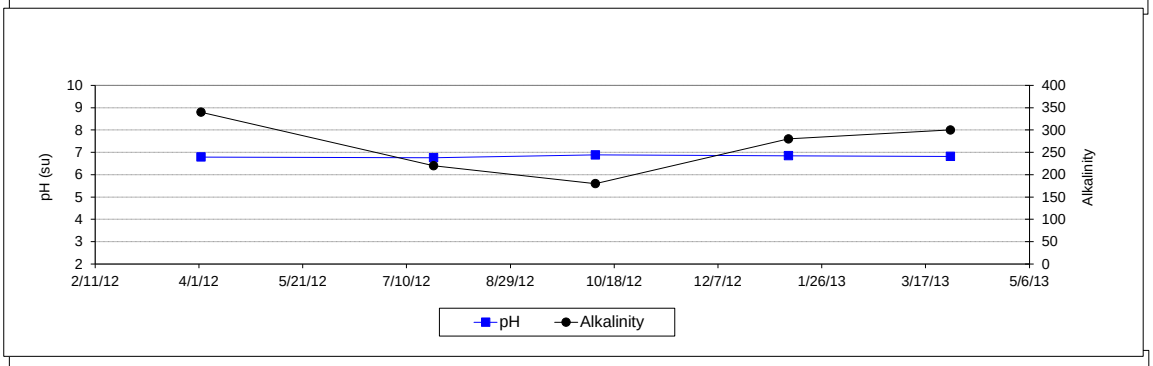

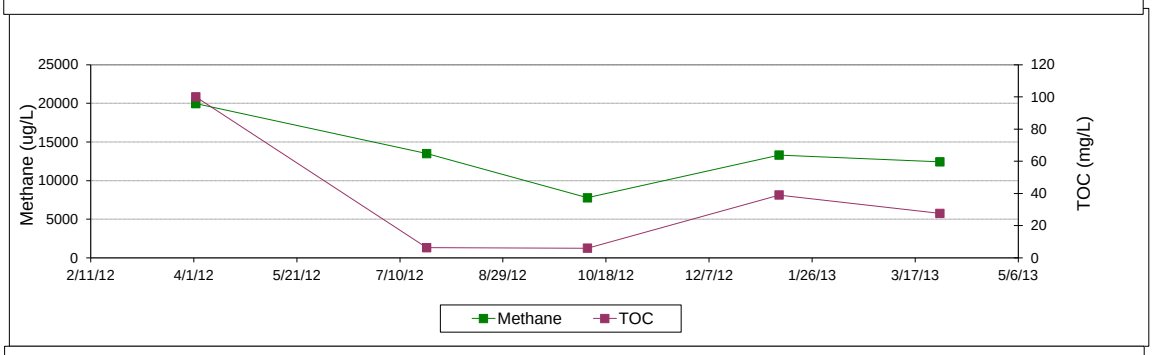

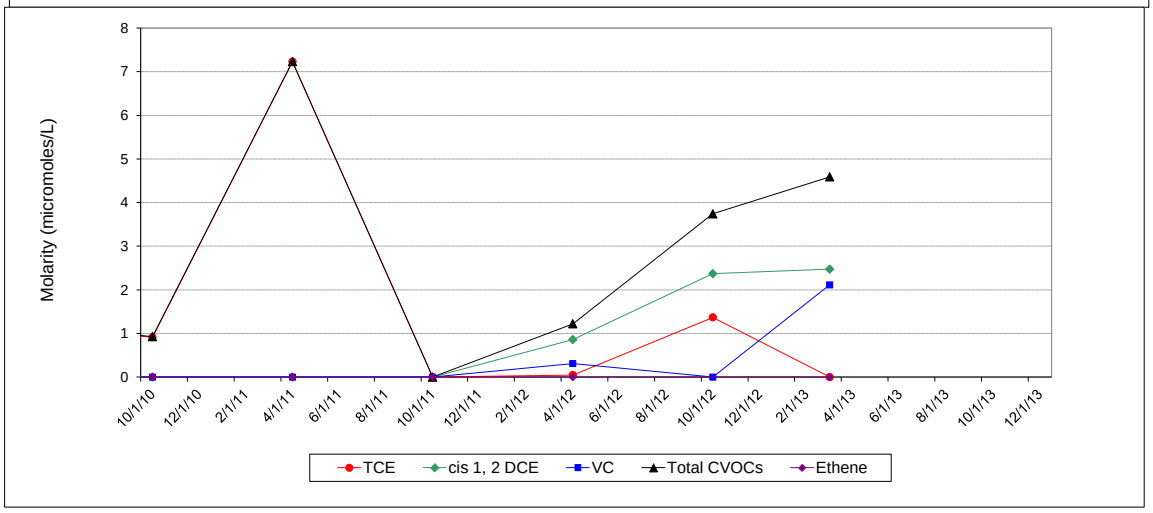

Northern Area Remediation Monitoring Data
MW-552
Former Raytheon Facility, Wayland, MA

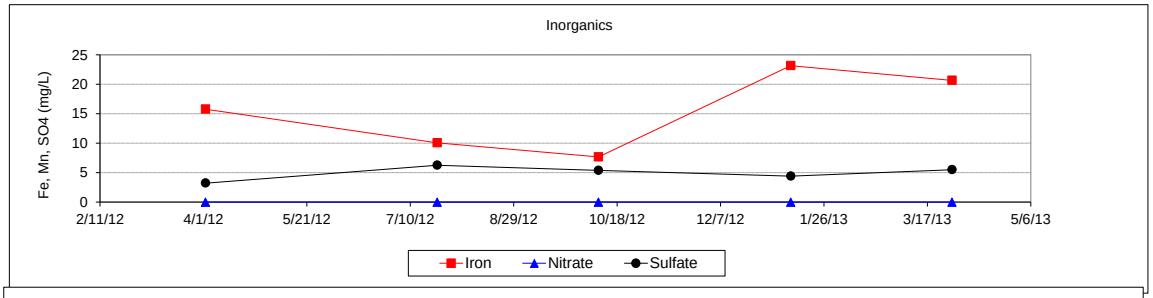

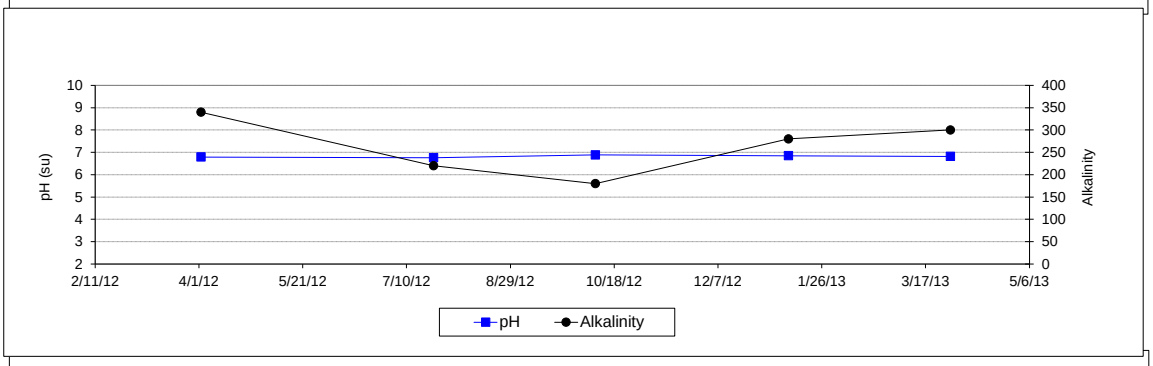

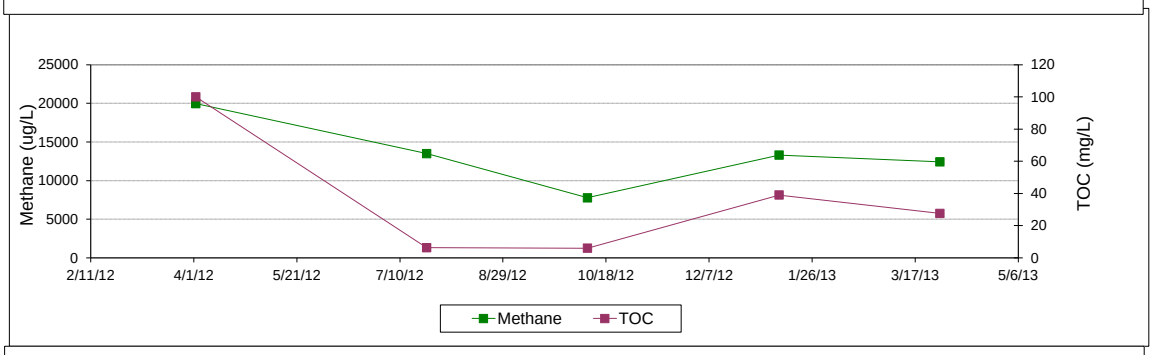

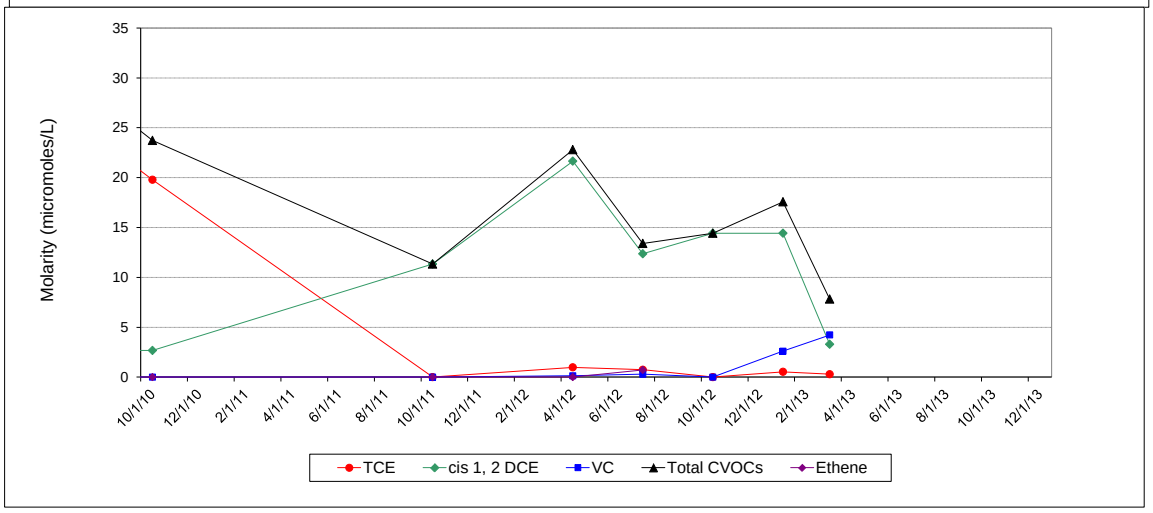

Northern Area Remediation Monitoring Data
MW-261S
Former Raytheon Facility, Wayland, MA

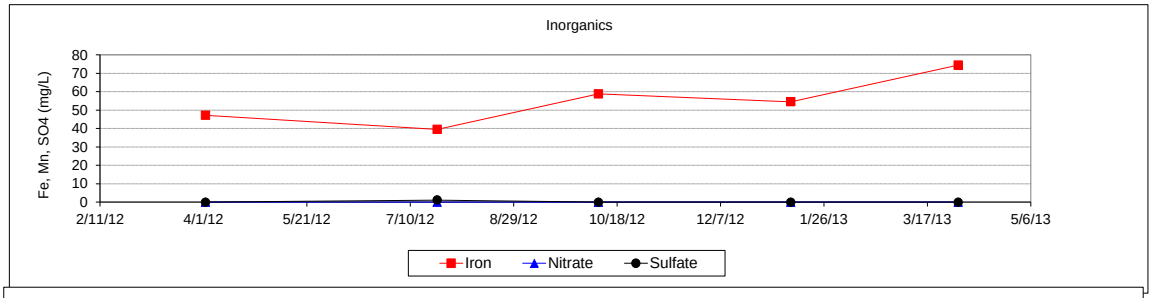

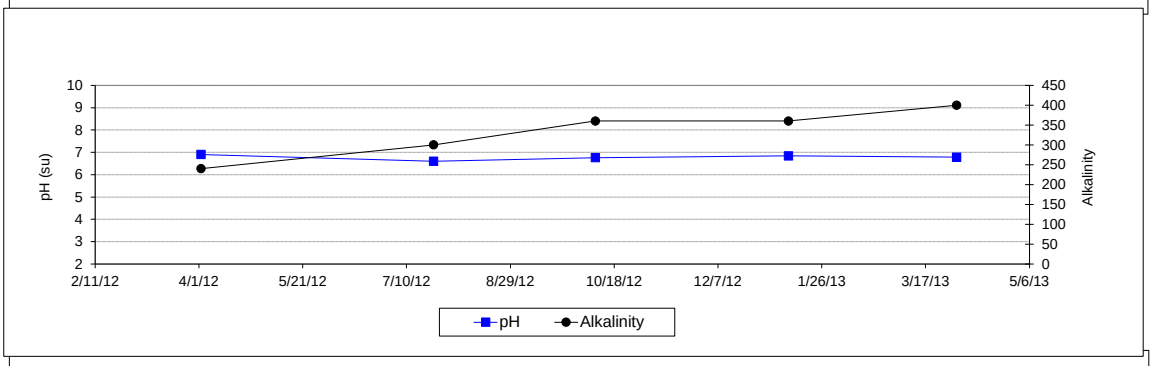

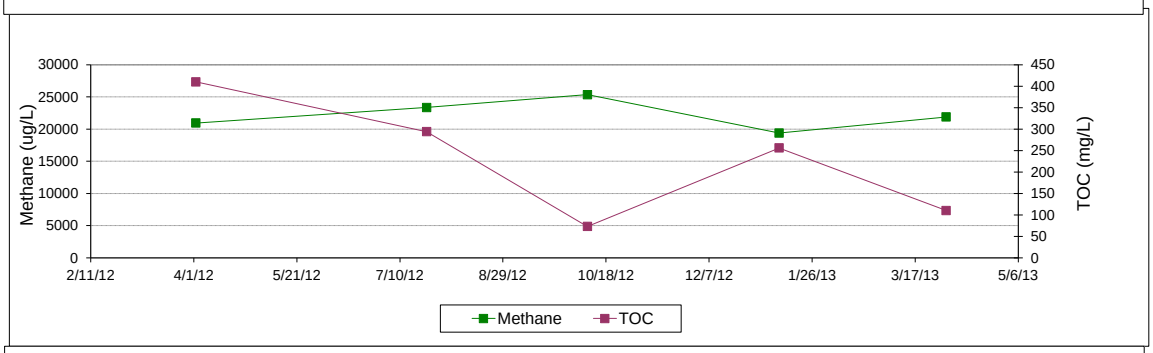

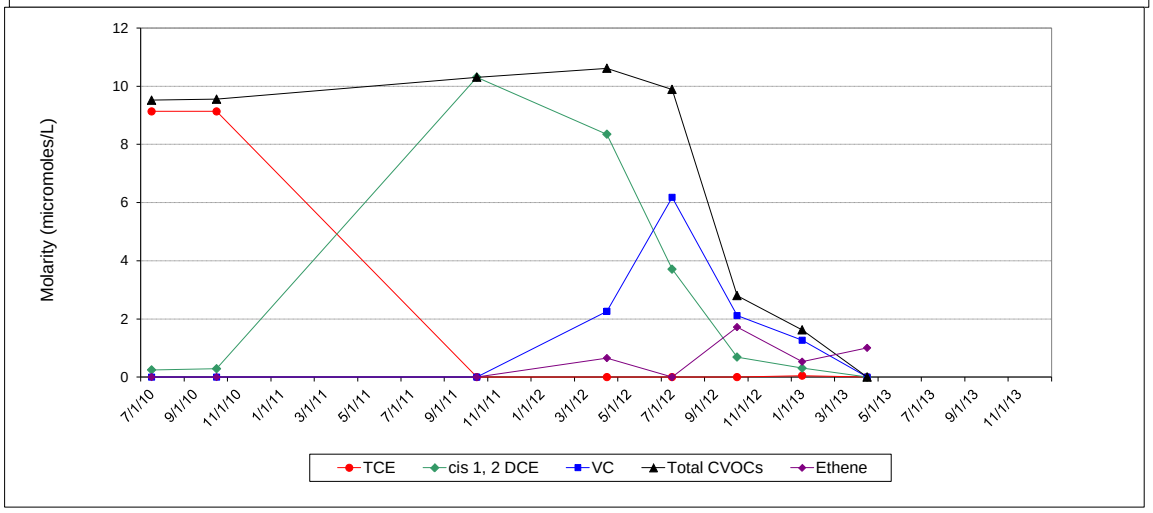

Northern Area Remediation Monitoring Data
MW-553
Former Raytheon Facility, Wayland, MA

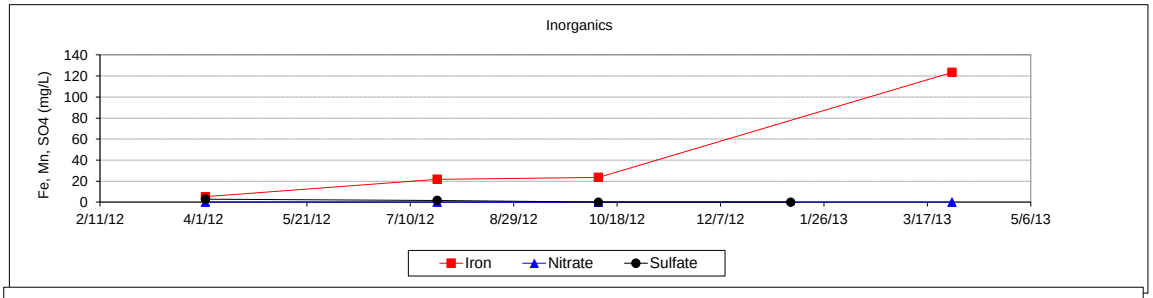

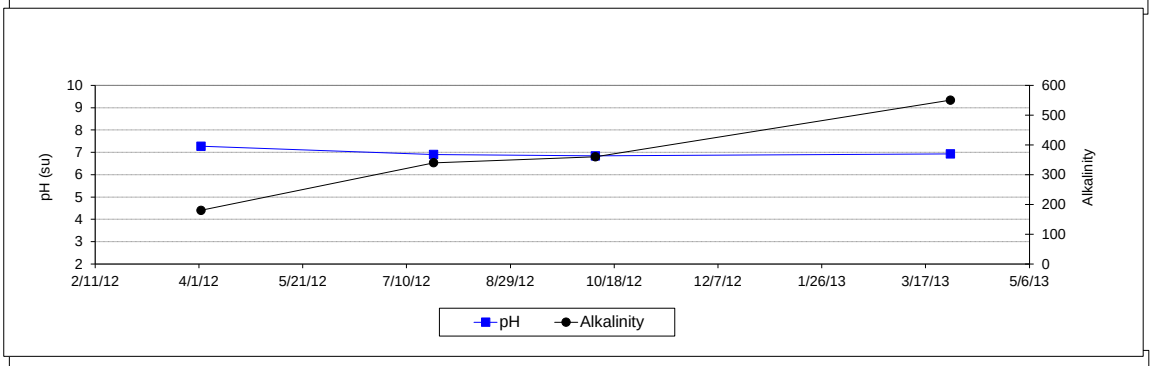

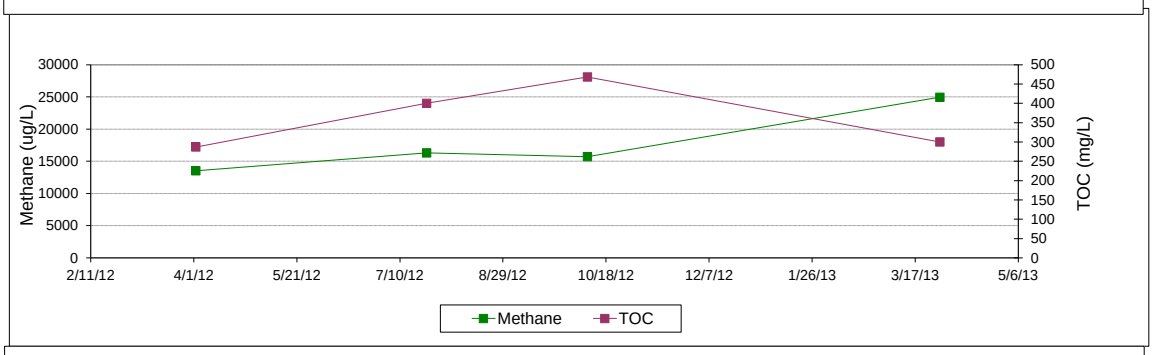

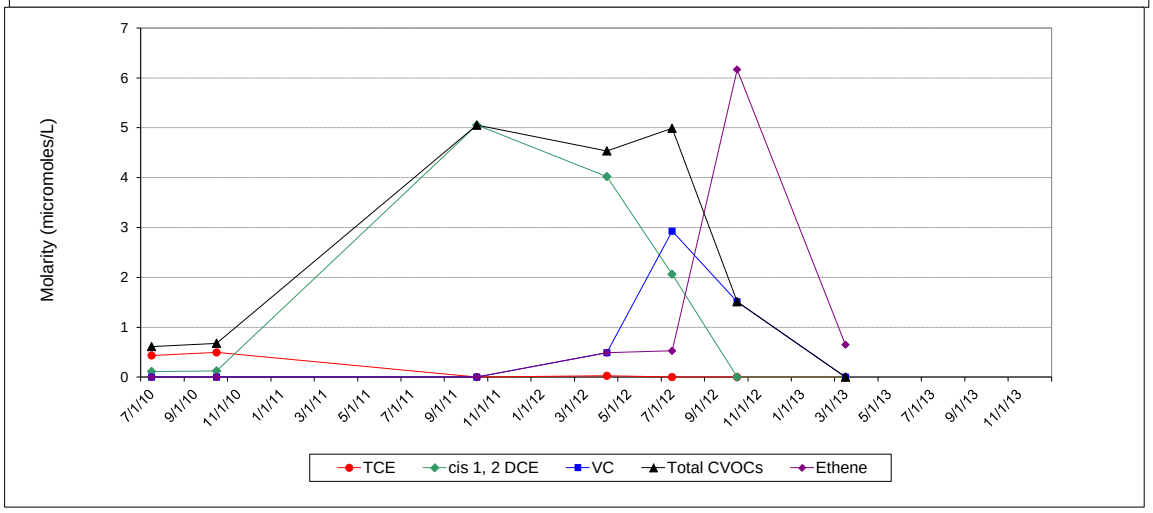

Northern Area Remediation Monitoring Data
MW-561
Former Raytheon Facility, Wayland, MA

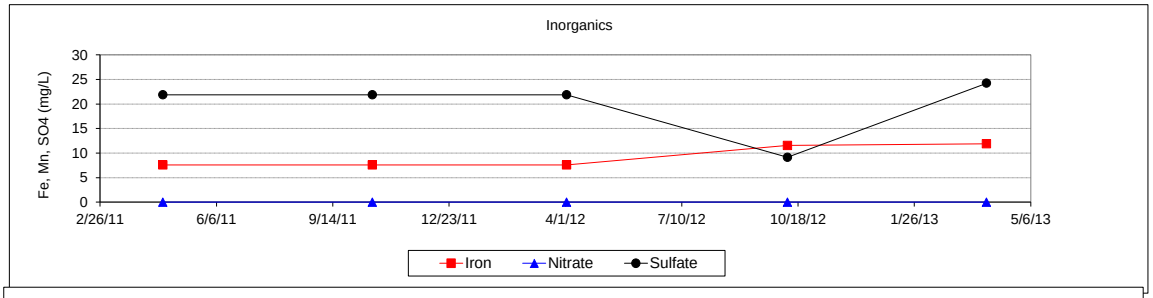

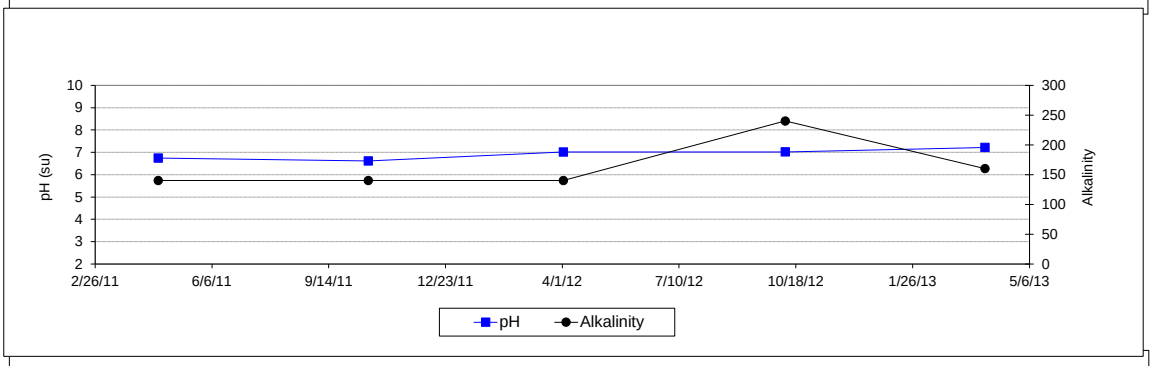

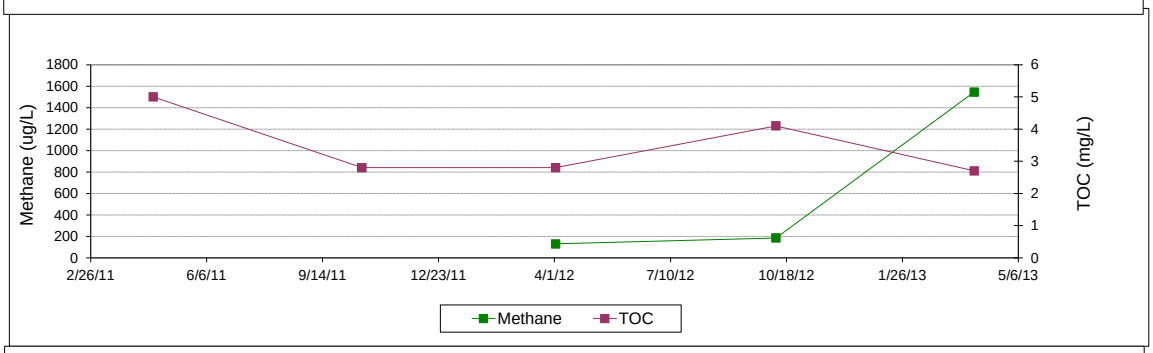

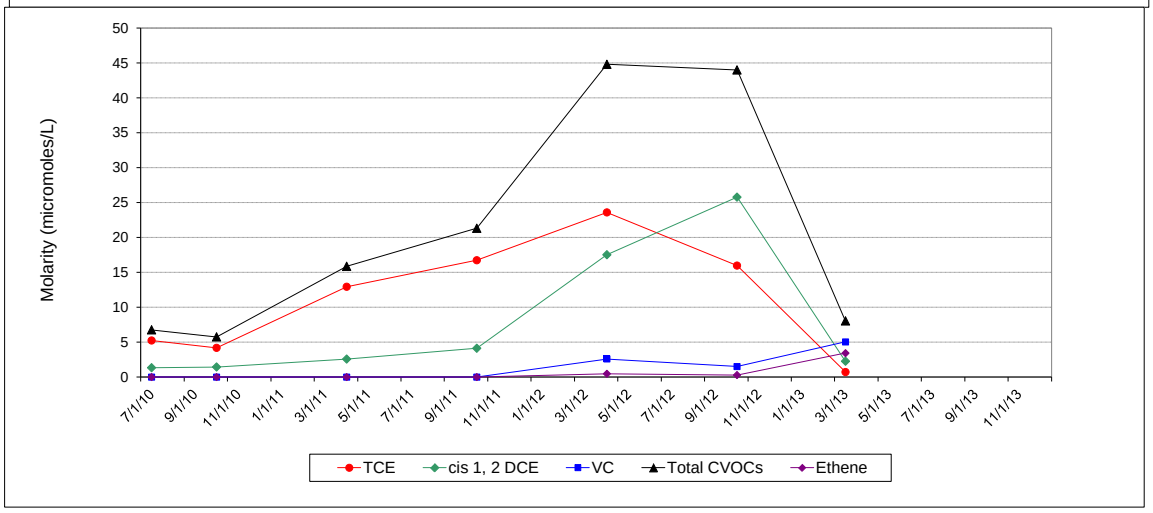

Northern Area Remediation Monitoring Data
MW-563
Former Raytheon Facility, Wayland, MA

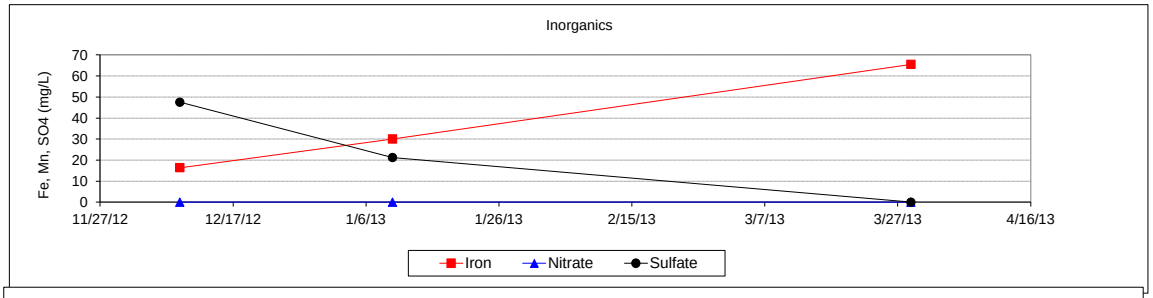

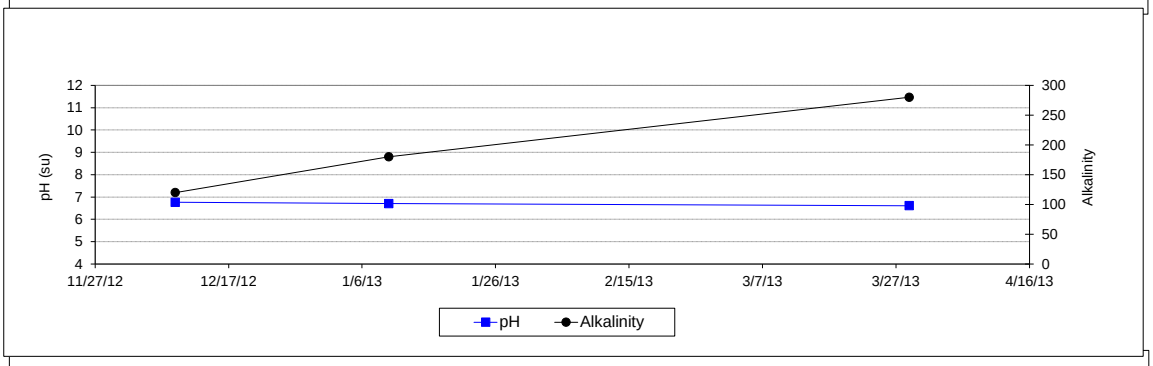

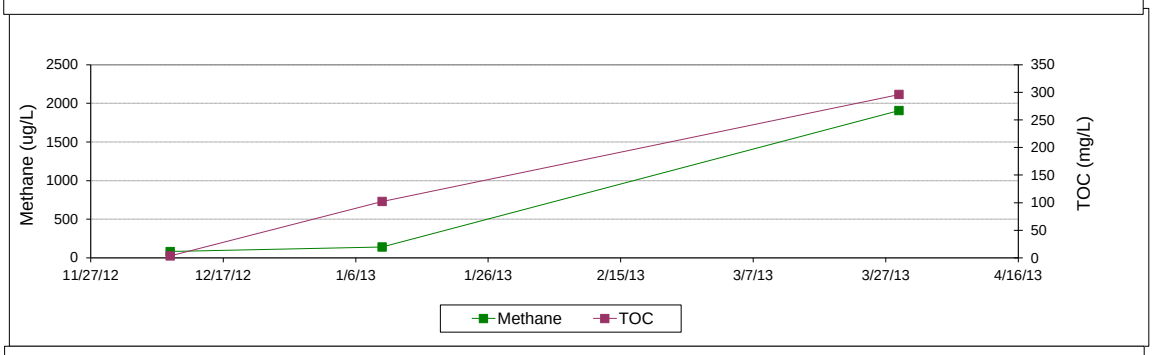

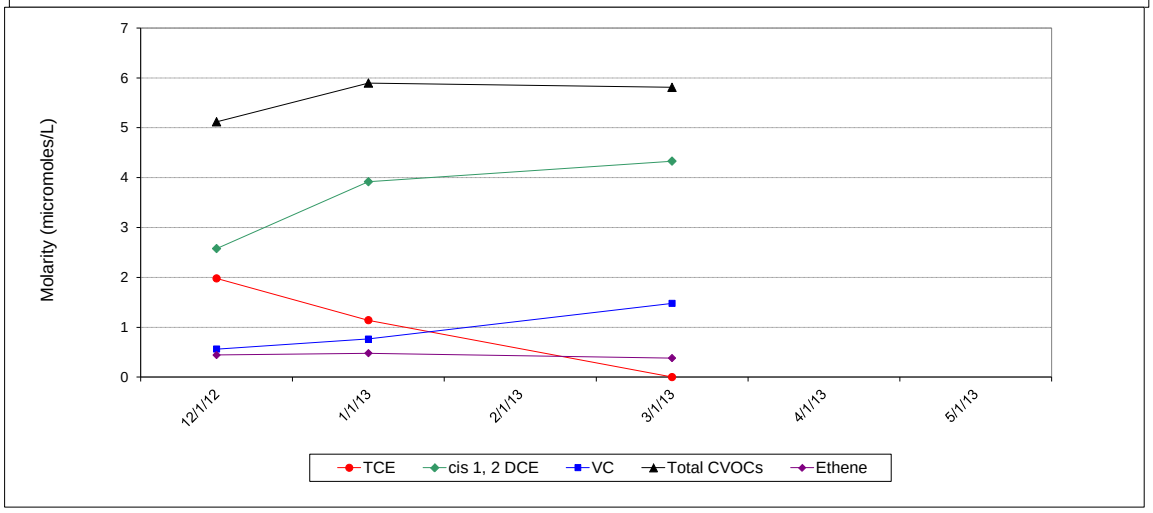

Northern Area Remediation Monitoring Data
MW-560
Former Raytheon Facility, Wayland, MA

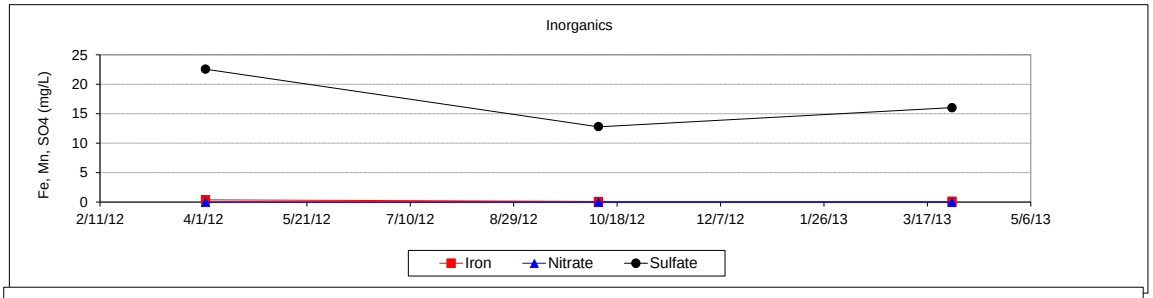

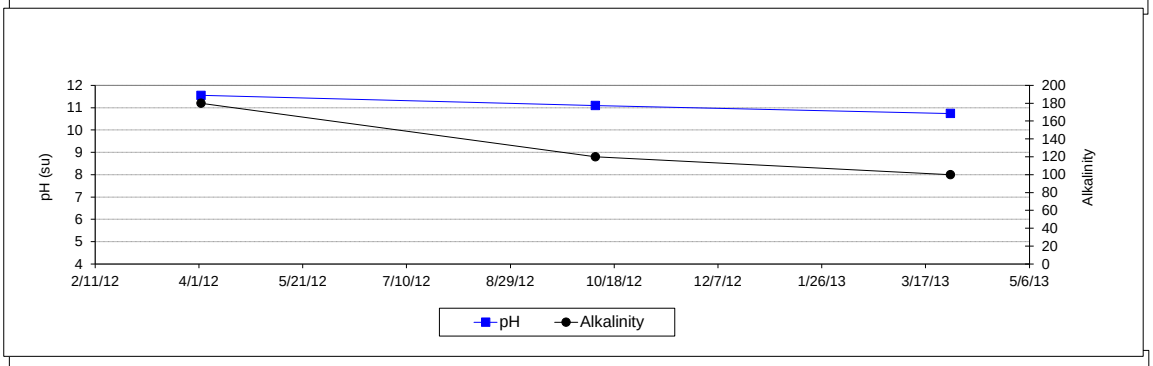

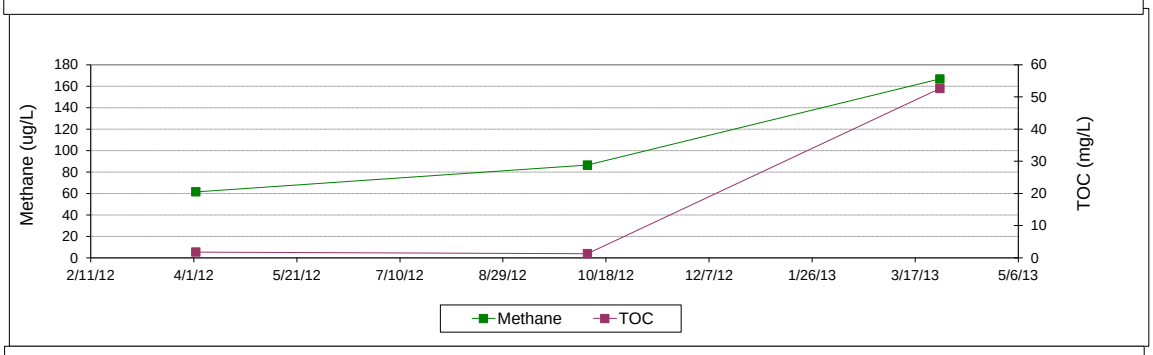

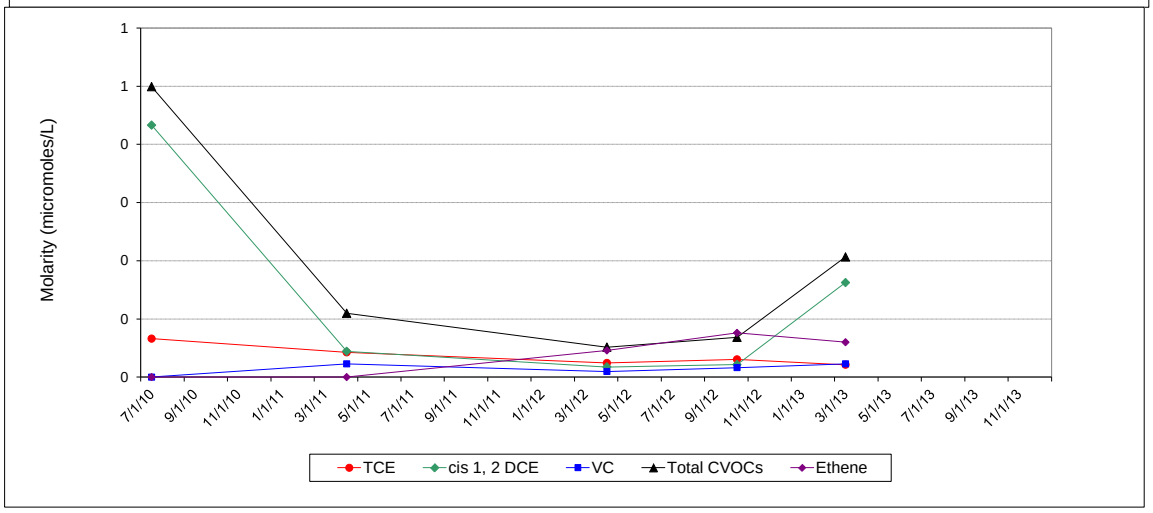

Appendix C
Boring Logs

WELL ID: MW-1001B

ERM

Client: Raytheon **Project Name:** Monitoring Wells

Project Number: 0167058.06 **Project Location:** Wayland, Massachusetts

DATE STARTED 9/26/12 **GROUND ELEVATION** NM

CONTRACTOR Geosearch **METHOD** Hollow Stem Auger

LOGGED BY G. Bellino **BORING SIZE** 6

NOTES

NOTES (continued):

DEPTH (ft)	GRAPHIC LOG	MATERIAL DESCRIPTION	WELL DIAGRAM

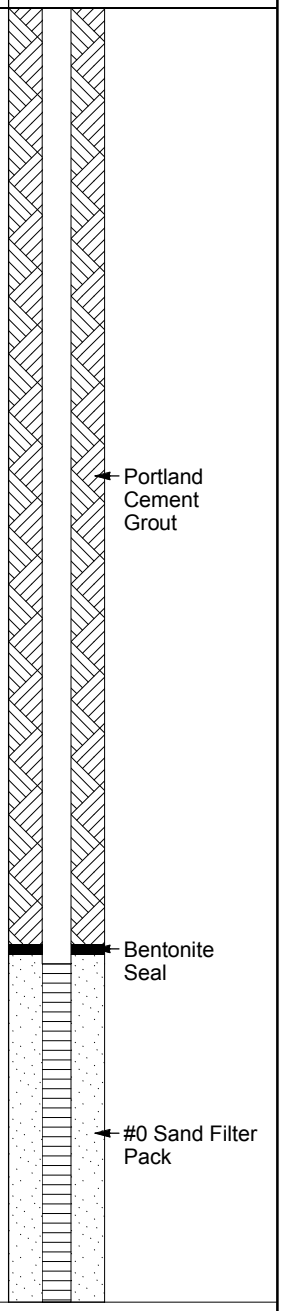

WELL ID: MW-1001M

ERM

Client: Raytheon **Project Name:** Monitoring Wells

Project Number: 0167058.06 **Project Location:** Wayland, Massachusetts

DATE STARTED 9/26/12 **GROUND ELEVATION** NM

CONTRACTOR Geosearch **METHOD** Hollow Stem Auger

LOGGED BY G. Bellino **BORING SIZE** 6

NOTES

NOTES (continued):

DEPTH (ft)	GRAPHIC LOG	MATERIAL DESCRIPTION	WELL DIAGRAM
5			
10			
15			Portland Cement Grout
20			
25			
30			Bentonite Seal
35			#0 Sand Filter pack
40			

WELL ID: MW-1002B

ERM

Client: Raytheon **Project Name:** Monitoring Wells

Project Number: 0167058.06 **Project Location:** Wayland, Massachusetts

DATE STARTED 9/25/12 **GROUND ELEVATION** NM

CONTRACTOR Geosearch **METHOD** Hollow Stem Auger

LOGGED BY G. Bellino **BORING SIZE** 6

NOTES

NOTES (continued):

DEPTH (ft)	GRAPHIC LOG	MATERIAL DESCRIPTION	WELL DIAGRAM

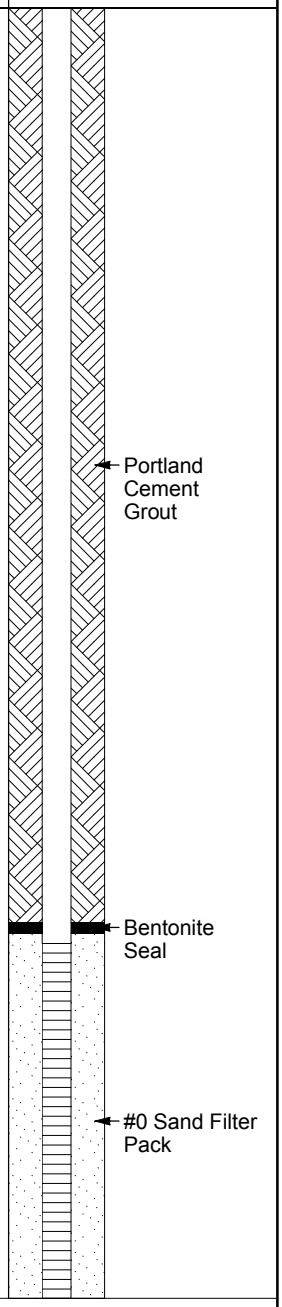

WELL ID: MW-1002M

ERM

Client: Raytheon **Project Name:** Monitoring Wells

Project Number: 0167058.06 **Project Location:** Wayland, Massachusetts

DATE STARTED 9/24/12 **GROUND ELEVATION** NM

CONTRACTOR Geosearch **METHOD** Hollow Stem Auger

LOGGED BY S. Seekins **BORING SIZE** 6

NOTES

NOTES (continued):

DEPTH (ft)	GRAPHIC LOG	MATERIAL DESCRIPTION	WELL DIAGRAM
5			
10			
15			Portland Cement Grout
20			
25			
30			Bentonite Seal
35			#2 Sand Filter Pack
40			

WELL ID: MW-1003

ERM

Client: Raytheon **Project Name:** Monitoring Wells

Project Number: 0167058.06 **Project Location:** Wayland, Massachusetts

DATE STARTED 9/24/12 **GROUND ELEVATION** NM

CONTRACTOR Geosearch **METHOD** Hollow Stem Auger

LOGGED BY S. Seekins **BORING SIZE** 6

NOTES

NOTES (continued):

DEPTH (ft)	GRAPHIC LOG	MATERIAL DESCRIPTION	WELL DIAGRAM
5			
10			
15			Portland Cement Grout
20			
25			
30			Bentonite Seal
35			#0 Sand Filter Pack

ERM

WELL ID: MW-1004

Client: Raytheon **Project Name:** Monitoring Wells

Project Number: 0167058.06 **Project Location:** Wayland, Massachusetts

DATE STARTED 1/11/13 **GROUND ELEVATION**

CONTRACTOR Geosearch **METHOD** Hollow Stem Auger

LOGGED BY P. Brousseau **BORING SIZE** 2

NOTES

NOTES (continued):

DEPTH (ft)	GRAPHIC LOG	MATERIAL DESCRIPTION	WELL DIAGRAM
5			
10			
15			Portland Cement Grout
20			
25			Bentonite Seal
30			#0 Sand Filter Pack

ERM

WELL ID: MW-1005

Client: Raytheon **Project Name:** Monitoring Wells

Project Number: 0167058.06 **Project Location:** Wayland, Massachusetts

DATE STARTED 1/11/13 **GROUND ELEVATION**

CONTRACTOR Geosearch **METHOD** Hollow Stem Auger

LOGGED BY P. Brousseau **BORING SIZE** 2

NOTES

NOTES (continued):

DEPTH (ft)	GRAPHIC LOG	MATERIAL DESCRIPTION	WELL DIAGRAM
5			
10			Portland Cement Grout
15			
20			Bentonite Seal
25			#0 Sand Filter Pack
30			

WELL ID: MW-1006

ERM

Client: Raytheon **Project Name:** Monitoring Wells

Project Number: 0167058.06 **Project Location:** Wayland, Massachusetts

DATE STARTED 9/24/12 **GROUND ELEVATION** NM

CONTRACTOR Geosearch **METHOD** Hollow Stem Auger

LOGGED BY D. Nelsen **BORING SIZE** 6

NOTES

NOTES (continued):

USCS Silty Sand

DEPTH (ft)	GRAPHIC LOG	MATERIAL DESCRIPTION	WELL DIAGRAM
5			
10			Portland cement grout
15			
20		SAND some silt, well sorted, medium firm, wet, tan/brown.	
		24.0	Bentonite seal
25			#2 sand filter pack
30			

Bottom of boring at 30.0 ft.

ERM

WELL ID: MW-1008

Client: Raytheon **Project Name:** Monitoring Wells

Project Number: 0167058.06 **Project Location:** Wayland, Massachusetts

DATE STARTED 1/11/13 **GROUND ELEVATION**

CONTRACTOR Geosearch **METHOD** Hollow Stem Auger

LOGGED BY P. Brousseau **BORING SIZE** 2

NOTES

NOTES (continued):

DEPTH (ft)	GRAPHIC LOG	MATERIAL DESCRIPTION	WELL DIAGRAM
5			
10			
15			Portland Cement Grout
20			
25			Bentonite Seal
30			#0 Sand Filter Pack

ERM

WELL ID: MW-1009

Client: Raytheon **Project Name:** Monitoring Wells

Project Number: 0167058.06 **Project Location:** Wayland, Massachusetts

DATE STARTED 9/26/12 **GROUND ELEVATION** NM

CONTRACTOR Geosearch **METHOD** Hollow Stem Auger

LOGGED BY S. Seekins **BORING SIZE** 6

NOTES

NOTES (continued):

DEPTH (ft)	GRAPHIC LOG	MATERIAL DESCRIPTION	WELL DIAGRAM
5			
10			Portland Cement Grout
15			
20			Bentonite Seal
25			#0 Sand Filter Pack

WELL ID: MW-1010D

ERM

Client: Raytheon **Project Name:** Monitoring Wells

Project Number: 0167058.06 **Project Location:** Wayland, Massachusetts

DATE STARTED 9/25/12 **GROUND ELEVATION** NM

CONTRACTOR Geosearch **METHOD** Hollow Stem Auger

LOGGED BY S. Seekins **BORING SIZE** 6

NOTES

NOTES (continued):

USCS Well-graded Sand

USCS Silty Sand

USCS Low Plasticity Organic silt or clay

DEPTH (ft)	GRAPHIC LOG	MATERIAL DESCRIPTION	WELL DIAGRAM
10			
20			Portland Cement Grout
30			
		38.0	
40		FINE SAND little silt, medium dense, moist, light brown. 40.0	
		41.0 SLOUGH wet, gray.	Bentonite Seal
		41.5 FINE SILTY SAND medium dense, moist, red brown.	
		42.0 FINE SANDY SILT some fine sand, medium dense, moist, gray.	
		43.0 SILTY SAND medium dense, moist, gray.	
		44.0 MEDIUM TO FINE SAND little silt, medium dense, moist, light brown.	
		MEDIUM TO FINE SAND little silt, medium dense, moist, gray brown.	#0 Sand Filter Pack
		48.0	

Bottom of boring at 48.0 ft.

WELL ID: MW-1010M

ERM

Client: Raytheon **Project Name:** Monitoring Wells

Project Number: 0167058.06 **Project Location:** Wayland, Massachusetts

DATE STARTED 9/26/12 **GROUND ELEVATION** NM

CONTRACTOR Geosearch **METHOD** Hollow Stem Auger

LOGGED BY S. Seekins **BORING SIZE** 6

NOTES

NOTES (continued):

USCS Silty Sand

USCS Silt

DEPTH (ft)	GRAPHIC LOG	MATERIAL DESCRIPTION	WELL DIAGRAM
5			
10			
15			Portland Cement Grout
20			
		22.0 SANDY FINE SILT silty fine sand, dense, moist, red brown. 24.0	
25		25.0 SILT medium dense, moist, red brown. 26.0 SILT little fine sand, medium dense, moist, red brown.	Bentonite Seal
30			#0 Sand Filter pack

Bottom of boring at 32.0 ft.

WELL ID: MW-1011

ERM

Client: Raytheon **Project Name:** Monitoring Wells

Project Number: 0167058.06 **Project Location:** Wayland, Massachusetts

DATE STARTED 9/24/12 **GROUND ELEVATION** NM

CONTRACTOR Geosearch **METHOD** Hollow Stem Auger

LOGGED BY D. Nelsen **BORING SIZE** 6

NOTES

NOTES (continued):

USCS Well-graded Sand

USCS Silt

USCS Silty Sand

DEPTH (ft)	GRAPHIC LOG	MATERIAL DESCRIPTION	WELL DIAGRAM
5			
10			
15			Portland Cement Grout
20			
		SAND well graded, wet, reddish brown to brown.	
		23.0	
		23.8 .	
		24.4 SAND some silt, medium stiff, wet, light gray to gray olive.	
25		25.0 SILT trace fine sand, medium stiff, wet, olive gray.	Bentonite Seal
		26.2 .	
		27.0 SILTY FINE SAND medium stiff, wet, gray.	
		27.5 .	
		28.7 SILTY FINE SAND medium stiff, wet, gray.	
		29.0 FINE SAND AND SILT medium stiff, wet, brownish gray.	
30		29.5 .	#2 Sand Filter Pack
		SILTY FINE SAND medium stiff, wet, gray.	
		33.0	

Bottom of boring at 32.0 ft.

WELL ID: MW-1013

ERM

Client: Raytheon **Project Name:** Monitoring Wells

Project Number: 0167058.06 **Project Location:** Wayland, Massachusetts

DATE STARTED 9/24/12 **GROUND ELEVATION** NM

CONTRACTOR Geosearch **METHOD** Hollow Stem Auger

LOGGED BY S. Seekins **BORING SIZE** 6

NOTES

NOTES (continued):

DEPTH (ft)	GRAPHIC LOG	MATERIAL DESCRIPTION	WELL DIAGRAM
5			
10			
15			Portland Cement Grout
20			
25			Bentonite Seal
30			#2 Sand Filter pack

ERM

WELL ID: MW-1014

Client: Raytheon **Project Name:** Monitoring Wells

Project Number: 0167058.06 **Project Location:** Wayland, Massachusetts

DATE STARTED 9/25/12 **GROUND ELEVATION** NM

CONTRACTOR Geosearch **METHOD** Hollow Stem Auger

LOGGED BY S. Seekins **BORING SIZE** 6

NOTES

NOTES (continued):

DEPTH (ft)	GRAPHIC LOG	MATERIAL DESCRIPTION	WELL DIAGRAM
10			
20			Portland Cement Grout
30			
40			Bentonite Seal
50			#0 Sand Filter Pack

WELL ID: MW-1015D

ERM

Client: Raytheon **Project Name:** Monitoring Wells

Project Number: 0167058.06 **Project Location:** Wayland, Massachusetts

DATE STARTED 9/24/12 **GROUND ELEVATION** NM

CONTRACTOR Geosearch **METHOD** Hollow Stem Auger

LOGGED BY D. Nelsen **BORING SIZE** 6

NOTES

NOTES (continued):

USCS Silt

USCS Well-graded Sand

DEPTH (ft)	GRAPHIC LOG	MATERIAL DESCRIPTION	WELL DIAGRAM
10			
20			Portland cement grout
30			
40		SILT some fine sand, well sorted, medium firm, wet, olive brown.	
		42.0	Bentonite Seal
		48.0	#2 Sand Filter Pack
		49.1	
50		50.0 MEDIUM TO COARSE SAND some fine sand, loose, wet, light brown.	

Bottom of boring at 50.0 ft.

WELL ID: MW-1016D

ERM

Client: Raytheon **Project Name:** Monitoring Wells

Project Number: 0167058.06 **Project Location:** Wayland, Massachusetts

DATE STARTED 9/26/12 **GROUND ELEVATION** NM

CONTRACTOR Geosearch **METHOD** Hollow Stem Auger

LOGGED BY D. Nelsen **BORING SIZE** 6

NOTES

NOTES (continued):

USCS Silt

USCS Well-graded Sand

DEPTH (ft)	GRAPHIC LOG	MATERIAL DESCRIPTION	WELL DIAGRAM
10		.	
20			Portland Cement Grout
30			
40			
		41.0	
		SILT some clay, medium firm, wet, gray.	
		43.0	
		SILT trace clay, soft, wet, gray.	
		45.0	
		FINE SAND trace silt, soft, wet, light brown.	
		47.0	
		SILT trace fine sand, medium stiff, wet, gray.	
50			Bentonite Seal
		51.0	
		FINE SAND trace silt, loose, wet, gray.	
		52.3	
		53.0	
		FINE SAND trace medium sand, well sorted, loose, wet, light brown to reddish brown.	#0 Sand Filter pack
		53.4	
		55.0	
		.	
		FINE SAND some medium sand, well sorted, medium dense to loose, wet, tan.	

Bottom of boring at 56.0 ft.

WELL ID: MW-1017D

ERM

Client: Raytheon **Project Name:** Monitoring Wells

Project Number: 0167058.06 **Project Location:** Wayland, Massachusetts

DATE STARTED 9/26/12 **GROUND ELEVATION** NM

CONTRACTOR Geosearch **METHOD** Hollow Stem Auger

LOGGED BY P. Brousseau **BORING SIZE** 6

NOTES

NOTES (continued):

USCS Low Plasticity Clay

USCS Silty Sand

USCS Silt

DEPTH (ft)	GRAPHIC LOG	MATERIAL DESCRIPTION	WELL DIAGRAM
10			
20			
30			Portland Cement Grout
40			
50		48.0	
		49.0 CLAY medium dense, gray.	
		50.0 SILT clay laminations, saturated.	Bentonite Seal
		52.0 SILT silty fine sand.	
		FINE SANDY SILT silt laminations, gray to brown.	
		54.0 SILTY FINE SAND medium dense, wet, gray.	#0 Sand Filter Pack
		56.0	

Bottom of boring at 57.0 ft.

WELL ID: MW-1018

ERM

Client: Raytheon **Project Name:** Monitoring Wells

Project Number: 0167058.06 **Project Location:** Wayland, Massachusetts

DATE STARTED 9/24/12 **GROUND ELEVATION** NM

CONTRACTOR Geosearch **METHOD** Hollow Stem Auger

LOGGED BY P. Brousseau **BORING SIZE** 6

NOTES

NOTES (continued):

USCS Silt

USCS Well-graded Sand

DEPTH (ft)	GRAPHIC LOG	MATERIAL DESCRIPTION	WELL DIAGRAM
5			
10			Portland Cement Grout
15			
20			Bentonite Seal
25		SILT well graded, non-plastic, wet, tan-brown. 25.0	
30		SAND some silt, well graded, loose to medium dense, gray brown. 30.5	#2 Sand Filter Pack
		. 32.0	Only Split Spoon Advanced to 33 feet
		SILT clay laminations, medium dense, gray. 33.0	

Bottom of boring at 33.0 ft.

WELL ID: MW-1019B

ERM

Client: Raytheon **Project Name:** Monitoring Wells

Project Number: 0167058.06 **Project Location:** Wayland, Massachusetts

DATE STARTED 9/25/12 **GROUND ELEVATION** NM

CONTRACTOR Geosearch **METHOD** Hollow Stem Auger

LOGGED BY G. Bellino **BORING SIZE** 6

NOTES

NOTES (continued):

DEPTH (ft)	GRAPHIC LOG	MATERIAL DESCRIPTION	WELL DIAGRAM
10			
20			
30			
40			
50			Portland Cement Grout
60			
70			
80			
90			Bentonite Seal #0 Sand Filter Pack

ERM

WELL ID: MW-1020

Client: Raytheon **Project Name:** Monitoring Wells

Project Number: 0167058.06 **Project Location:** Wayland, Massachusetts

DATE STARTED 9/27/12 **GROUND ELEVATION** NM

CONTRACTOR Geosearch **METHOD** Hollow Stem Auger

LOGGED BY S. Seekins **BORING SIZE** 6

NOTES

NOTES (continued):

DEPTH (ft)	GRAPHIC LOG	MATERIAL DESCRIPTION	WELL DIAGRAM
10			
20			Portland Cement Grout
30			
40			Bentonite Seal
			#0 Sand Filter pack

ERM

WELL ID: MW-1022

Client: Raytheon **Project Name:** Monitoring Wells

Project Number: 0167058.06 **Project Location:** Wayland, Massachusetts

DATE STARTED 9/25/12 **GROUND ELEVATION** NM

CONTRACTOR Geosearch **METHOD** Hollow Stem Auger

LOGGED BY P. Brousseau **BORING SIZE** 6

NOTES

NOTES (continued):

DEPTH (ft)	GRAPHIC LOG	MATERIAL DESCRIPTION	WELL DIAGRAM
10			
20			Portland Cement Grout
30			
40			Bentonite Seal
50			#0 Sand Filter Pack

ERM

WELL ID: MW-1023

Client: Raytheon **Project Name:** Monitoring Wells

Project Number: 0167058.06 **Project Location:** Wayland, Massachusetts

DATE STARTED 9/25/12 **GROUND ELEVATION** NM

CONTRACTOR Geosearch **METHOD** Hollow Stem Auger

LOGGED BY D. Nelsen **BORING SIZE** 6

NOTES

NOTES (continued):

DEPTH (ft)	GRAPHIC LOG	MATERIAL DESCRIPTION	WELL DIAGRAM
10			
20			Portland Cement Grout
30			
40			Bentonite Seal
50			#0 Sand Filter Pack

WELL ID: MW-1024D

ERM

Client: Raytheon **Project Name:** Monitoring Wells

Project Number: 0167058.06 **Project Location:** Wayland, Massachusetts

DATE STARTED 9/25/12 **GROUND ELEVATION** NM

CONTRACTOR Geosearch **METHOD** Hollow Stem Auger

LOGGED BY D. Nelsen **BORING SIZE** 6

NOTES

NOTES (continued):

DEPTH (ft)	GRAPHIC LOG	MATERIAL DESCRIPTION	WELL DIAGRAM
10			
20			
30			
40			Portland Cement Grout
50			
60			
70			Bentonite Seal #0 Sand Filter Pack

WELL ID: MW-1025D

ERM

Client: Raytheon **Project Name:** Monitoring Wells

Project Number: 0167058.06 **Project Location:** Wayland, Massachusetts

DATE STARTED 9/27/12 **GROUND ELEVATION** NM

CONTRACTOR Geosearch **METHOD** Hollow Stem Auger

LOGGED BY P. Brousseau **BORING SIZE** 6

NOTES

NOTES (continued):

DEPTH (ft)	GRAPHIC LOG	MATERIAL DESCRIPTION	WELL DIAGRAM
10			
20			
30			
40			Portland Cement Grout
50			
60			
70			Bentonite Seal #0 Sand Filter Pack

WELL ID: MW-1025M

ERM

Client: Raytheon **Project Name:** Monitoring Wells

Project Number: 0167058.06 **Project Location:** Wayland, Massachusetts

DATE STARTED 9/27/12 **GROUND ELEVATION** NM

CONTRACTOR Geosearch **METHOD** Hollow Stem Auger

LOGGED BY P. Brousseau **BORING SIZE** 6

NOTES

NOTES (continued):

DEPTH (ft)	GRAPHIC LOG	MATERIAL DESCRIPTION	WELL DIAGRAM
10			
20			
30			Portland Cement Grout
40			
50			Bentonite Seal #0 Sand Filter Pack

WELL ID: MW-1026D

ERM

Client: Raytheon **Project Name:** Monitoring Wells

Project Number: 0167058.06 **Project Location:** Wayland, Massachusetts

DATE STARTED 9/27/12 **GROUND ELEVATION** NM

CONTRACTOR Geosearch **METHOD** Hollow Stem Auger

LOGGED BY S. Seekins **BORING SIZE** 6

NOTES

NOTES (continued):

DEPTH (ft)	GRAPHIC LOG	MATERIAL DESCRIPTION	WELL DIAGRAM
10			
20			
30			
40			Portland Cement Grout
50			
60			
70			Bentonite Seal
			#0 Sand Filter pack

WELL ID: MW-1027

ERM

Client: Raytheon **Project Name:** Monitoring Wells

Project Number: 0167058.06 **Project Location:** Wayland, Massachusetts

DATE STARTED 1/10/13 **GROUND ELEVATION**

CONTRACTOR Geosearch **METHOD** Drive and Wash

LOGGED BY P. Brousseau **BORING SIZE** 2

NOTES

NOTES (continued):

DEPTH (ft)	GRAPHIC LOG	MATERIAL DESCRIPTION	WELL DIAGRAM
10			
20			
30			Portland Cement Grout
40			
50			
60			Bentonite Seal #0 Sand Filter Pack

WELL ID: MW-1028

ERM

Client: Raytheon **Project Name:** Monitoring Wells

Project Number: 0167058.06 **Project Location:** Wayland, Massachusetts

DATE STARTED 1/9/13 **GROUND ELEVATION**

CONTRACTOR Geosearch **METHOD** Drive and Wash

LOGGED BY P. Brousseau **BORING SIZE** 2

NOTES

NOTES (continued):

DEPTH (ft)	GRAPHIC LOG	MATERIAL DESCRIPTION	WELL DIAGRAM
10			
20			
30			Portland Cement Grout
40			
50			
60			Bentonite Seal #0 Sand Filter Pack

ERM

WELL ID: MW-1029

Client: Raytheon **Project Name:** Monitoring Wells

Project Number: 0167058.06 **Project Location:** Wayland, Massachusetts

DATE STARTED _____ **GROUND ELEVATION** NM

CONTRACTOR Geosearch **METHOD** Hollow Stem Auger

LOGGED BY _____ **BORING SIZE** 6

NOTES _____

NOTES (continued): _____

DEPTH (ft)	GRAPHIC LOG	MATERIAL DESCRIPTION	WELL DIAGRAM
10			
20			
30			Portland Cement Grout
40			
50			Bentonite Seal #0 Sand Filter Pack

WELL ID: MW-1030

ERM

Client: Raytheon **Project Name:** Monitoring Wells

Project Number: 0167058.06 **Project Location:** Wayland, Massachusetts

DATE STARTED 9/24/12 **GROUND ELEVATION** NM

CONTRACTOR Geosearch **METHOD** Hollow Stem Auger

LOGGED BY P. Brousseau **BORING SIZE** 6

NOTES

NOTES (continued):

USCS Silty Sand | USCS Silt | USCS Well-graded Sand

DEPTH (ft)	GRAPHIC LOG	MATERIAL DESCRIPTION	WELL DIAGRAM
10			
20			
30			Portland Cement Grout
40			
50		48.0 SILTY FINE SAND trace medium sand, dense, wet, brown. 50.0	Bentonite Seal
		FINE SAND little silt, medium dense, gray brown. 51.5	
		52.0 FINE SANDY SILT wet.	
		54.0 FINE SAND little silt, medium dense, wet, brown.	
		SILT trace fine sand, wet, brown to gray brown. 56.0	#2 Sand Filter pack
		FINE SAND silt, dense, wet, brown. 57.5	
		58.0 SILTY FINE SAND dense, wet, gray.	

Bottom of boring at 58.0 ft.

ERM

WELL ID: MW-1031

Client: Raytheon **Project Name:** Monitoring Wells

Project Number: 0167058.06 **Project Location:** Wayland, Massachusetts

DATE STARTED 9/27/12 **GROUND ELEVATION** NM

CONTRACTOR Geosearch **METHOD** Hollow Stem Auger

LOGGED BY D. Nelsen **BORING SIZE** 6

NOTES

NOTES (continued):

DEPTH (ft)	GRAPHIC LOG	MATERIAL DESCRIPTION	WELL DIAGRAM
10			
20			
30			Portland Cement Grout
40			
50			
60			Bentonite Seal #0 Sand Filter Pack

ERM

WELL ID: MW-1032

Client: Raytheon **Project Name:** Monitoring Wells

Project Number: 0167058.06 **Project Location:** Wayland, Massachusetts

DATE STARTED 9/27/12 **GROUND ELEVATION** NM

CONTRACTOR Geosearch **METHOD** Hollow Stem Auger

LOGGED BY D. Nelsen **BORING SIZE** 6

NOTES

NOTES (continued):

DEPTH (ft)	GRAPHIC LOG	MATERIAL DESCRIPTION	WELL DIAGRAM
10			
20			
30			Portland Cement Grout
40			
50			
60			Bentonite Seal #0 Sand Filter Pack

ERM

WELL ID: MW-1033

Client: Raytheon **Project Name:** Monitoring Wells

Project Number: 0167058.06 **Project Location:** Wayland, Massachusetts

DATE STARTED 1/10/13 **GROUND ELEVATION**

CONTRACTOR Geosearch **METHOD** Drive and Wash

LOGGED BY S. Braga **BORING SIZE** 2

NOTES

NOTES (continued):

DEPTH (ft)	GRAPHIC LOG	MATERIAL DESCRIPTION	WELL DIAGRAM
10			
20			
30			
40			Portland Cement Grout
50			
60			
70			Bentonite Seal #0 Sand Filter Pack

WELL ID: MW-1034

ERM

Client: Raytheon **Project Name:** Monitoring Wells

Project Number: 0167058.06 **Project Location:** Wayland, Massachusetts

DATE STARTED 1/9/13 **GROUND ELEVATION**

CONTRACTOR Geosearch **METHOD** Drive and Wash

LOGGED BY S. Braga **BORING SIZE** 2

NOTES

NOTES (continued):

DEPTH (ft)	GRAPHIC LOG	MATERIAL DESCRIPTION	WELL DIAGRAM
10			
20			
30			
40			Portland Cement Grout
50			
60			
70			
80			Bentonite Seal #0 Sand Filter Pack

Appendix D
Laboratory Reports

TestAmerica

THE LEADER IN ENVIRONMENTAL TESTING

ANALYTICAL REPORT

TestAmerica Laboratories, Inc.
TestAmerica Westfield
Westfield Executive Park
53 Southampton Road
Westfield, MA 01085
Tel: (413)572-4000

TestAmerica Job ID: 360-43153-1
Client Project/Site: IDS Wayland

For:
ERM-Northeast
One Beacon Steet
5th Floor
Boston, Massachusetts 02108

Attn: Jason Flattery

Authorized for release by:
10/11/2012 11:59:32 AM
Joe Chimi
Report Production Representative
joe.chimi@testamericainc.com

Designee for

Becky Mason
Project Manager II
becky.mason@testamericainc.com

LINKS

Review your project results through TotalAccess

Have a Question? Ask The Expert

Visit us at: www.testamericainc.com

The test results in this report meet all 2003 NELAC and 2009 TNI requirements for accredited parameters, exceptions are noted in this report. This report may not be reproduced except in full, and with written approval from the laboratory. For questions please contact the Project Manager at the e-mail address or telephone number listed on this page.

This report has been electronically signed and authorized by the signatory. Electronic signature is intended to be the legally binding equivalent of a traditionally handwritten signature.

Results relate only to the items tested and the sample(s) as received by the laboratory.

Table of Contents

Cover Page 1
Table of Contents 2
Case Narrative 3
Detection Summary 5
Method Summary 6
Sample Summary 7
Client Sample Results 8
Definitions 14
QC Association 15
Surrogate Summary 16
QC Sample Results 17
Chronicle 22
Certification Summary 23
Receipt Checklists 25
Chain of Custody 26

MassDEP Analytical Protocol Certification Form

Laboratory Name:	**TestAmerica Westfield**	Project #:	**360-43153-1**
Project Location:	**Wayland MA**	RTN:	

This form provides certifications for the following data set: list Laboratory Sample ID Number(s):

360-43153-(1-3)

Matrices: ☐ Groundwater/Surface Water ☒ Soil/Sediment ☐ Drinking Water ☐ Air ☐ Other:

CAM Protocols (check all that apply below):

8260 VOC CAM II A ☒	7470/7471 Hg CAM III B ☐	Mass DEP VPH CAM IV A ☐	8081 Pesticides CAM V B ☐	7196 Hex Cr CAM VI B ☐	Mass DEP APH CAM IX A ☐
8270 SVOC CAM II B ☐	7010 Metals CAM III C ☐	Mass DEP EPH CAM IV B ☐	8151 Herbicides CAM V C ☐	8330 Explosives CAM VIII A ☐	TO-15 VOC CAM IX B ☐
6010 Metals CAM III A ☐	6020 Metals CAM III D ☐	8082 PCB CAM V A ☐	9014 Total Cyanide/PAC CAM VI A ☐	6860 Perchlorate CAM VIII B ☐	

Affirmative Responses to Questions A through F are required for "Presumptive Certainty" status

A	Were all samples received in a condition consistent with those described on the Chain-of-Custody, properly preserved (including temperature) in the field or laboratory, and prepared/analyzed within method holding time.	☒ Yes ☐ No
B	Were the analytical method(s) and all associated QC requirements specified in the selected CAM protocol(s) followed?	☒ Yes ☐ No
C	Were all required corrective actions and analytical response actions specified in the selected CAM protocol(s) implemented for all identified performance standard non-conformances?	☒ Yes ☐ No
D	Does the laboratory report comply with all the reporting requirements specified in CAM VII A, "Quality Assurance and Quality Control Guidelines for the Acquisition and Reporting of Analytical Data"?	☒ Yes ☐ No
E	a. VPH, EPH and APH Methods only: Was each method conducted without significant modification(s)? (Refer to the individual method(s) for a list of significant modifications). b. APH and TO-15 Methods only: Was the complete analyte list reported for each method?	☐ Yes ☐ No ☐ Yes ☐ No
F	Were all applicable CAM protocol QC and performance standard non-conformances identified and evaluated in a laboratory narrative (including all "No" responses to Questions A through E)?	☒ Yes ☐ No

Responses to Questions G, H and I below are required for "Presumptive Certainty" status

G	Were the reporting limits at or below all CAM reporting limits specified in the selected CAM protocol(s)?	☐ Yes ☒ No[1]

Data User Note: ***Data that achieve "Presumptive Certainty" status may not necessarily meet the data usability and representativeness requirements described in 310 CMR 40. 1056 (2)(k) and WCS-07-350***

H	Were **all** QC performance standards specified in the CAM protocol(s) achieved?	☐ Yes ☒ No[1]
I	Were results reported for the complete analyte list specified in the selected CAM protocol(s) ?	☒ Yes ☐ No[1]

[1] All negative responses must be addressed in an attached laboratory narrative.

I, the undersigned, attest under the pains and penalties of perjury that, based upon my personal inquiry of those responsible for obtaining the information, the material contained in this analytical report is, to the best of my knowledge and belief, is accurate and complete.

Signature:		Position:	Laboratory Director
Printed Name:	Steven C. Hartmann	Date:	10/11/12 11:52

This form has been electronically signed and approved

Job ID: 360-43153-1

Laboratory: TestAmerica Westfield

Narrative

With the exceptions noted as flags or footnotes, standard analytical protocols were followed in the analysis of the samples and no problems were encountered or anomalies observed. In addition all laboratory quality control samples were within established control limits, with any exceptions noted below. Each sample was analyzed to achieve the lowest possible reporting limit within the constraints of the method. In some cases, due to interference or analytes present at high concentrations, samples were diluted. For diluted samples, the reporting limits are adjusted relative to the dilution required.

Calculations are performed before rounding to avoid round-off errors in calculated results.

All holding times were met and proper preservation noted for the methods performed on these samples, unless otherwise detailed in the individual sections below.

RECEIPT

The samples were received on 10/05/2012; the samples arrived in good condition, properly preserved and on ice. The temperature of the coolers at receipt was 11.4 C.

TestAmerica's Reporting Limits (RLs) for this report may not always meet client specified method reporting limits due to various reasons such as methodology, dilutions, matrix or moisture content (soils). TestAmerica's pivot table EDD documents which compound(s) exceed certain regulatory standards. If not included with your deliverables, please contact your Project Manager about the availability of this EDD for your report.
ice.

VOLATILE ORGANIC COMPOUNDS (GC-MS)

Samples S-1-20121004-01 (360-43153-1), S-2-20121004-01 (360-43153-2) and S-3-20121004-01 (360-43153-3) were analyzed for volatile organic compounds (GC-MS) in accordance with SW846 8260C. The samples were prepared and analyzed on 10/09/2012.

1,2,3-Trichlorobenzene was detected in method blank MB 360-96421/3-A at a level exceeding the reporting limit. If the associated sample reported a result above the MDL and/or RL, the result has been "B" flagged. This analyte was not detected in the associated samples. Refer to the QC report for details.

2-Butanone (MEK), Bromomethane, Chloroethane and Dichlorodifluoromethane failed the recovery criteria low for LCS 360-96421/1-A.
2-Butanone (MEK), Bromomethane, Chloroethane and Dichlorodifluoromethane failed the recovery criteria low for LCSD 360-96421/2-A.
Refer to the QC report for details.

The calibration curve uses quadratic regression for Vinyl chloride, trans-1,2-Dichloroethene, Methyl tert-butyl ether, 2,2-Dichloropropane, Carbon tetrachloride, 1,1,1-Trichloroethane, 2-Butanone (MEK) and 4-Methyl-2-Pentanone (MIBK) as allowed by the method.

The following samples were provided to the laboratory with a significantly different initial weight than that required by the reference method: S-2-20121004-01 (360-43153-2), S-3-20121004-01 (360-43153-3). The method requires 1:1 ratio of soil to DI Water. The amount provided was above this range.

No other difficulties were encountered during the VOC analyses.

All other quality control parameters were within the acceptance limits.

PERCENT SOLIDS

Samples S-1-20121004-01 (360-43153-1), S-2-20121004-01 (360-43153-2) and S-3-20121004-01 (360-43153-3) were analyzed for percent solids in accordance with EPA Moisture. The samples were analyzed on 10/09/2012.

No difficulties were encountered during the % solids analyses.

All quality control parameters were within the acceptance limits.

Detection Summary

Client: ERM-Northeast
Project/Site: IDS Wayland

TestAmerica Job ID: 360-43153-1

Client Sample ID: S-1-20121004-01 — Lab Sample ID: 360-43153-1

No Detections

Client Sample ID: S-2-20121004-01 — Lab Sample ID: 360-43153-2

No Detections

Client Sample ID: S-3-20121004-01 — Lab Sample ID: 360-43153-3

No Detections

Method Summary

Client: ERM-Northeast
Project/Site: IDS Wayland

TestAmerica Job ID: 360-43153-1

Method	Method Description	Protocol	Laboratory
8260C	Volatile Organic Compounds (GC/MS)	MA DEP	TAL WFD
Moisture	Percent Moisture	EPA	TAL WFD

Protocol References:

EPA = US Environmental Protection Agency

MA DEP = Massachusetts Department Of Environmental Protection

Laboratory References:

TAL WFD = TestAmerica Westfield, Westfield Executive Park, 53 Southampton Road, Westfield, MA 01085, TEL (413)572-4000

Sample Summary

Client: ERM-Northeast
Project/Site: IDS Wayland

TestAmerica Job ID: 360-43153-1

Lab Sample ID	Client Sample ID	Matrix	Collected	Received
360-43153-1	S-1-20121004-01	Solid	10/04/12 09:30	10/05/12 19:50
360-43153-2	S-2-20121004-01	Solid	10/04/12 09:45	10/05/12 19:50
360-43153-3	S-3-20121004-01	Solid	10/04/12 10:00	10/05/12 19:50

Method: 8260C - Volatile Organic Compounds (GC/MS)

Client Sample ID: S-1-20121004-01
Date Collected: 10/04/12 09:30
Date Received: 10/05/12 19:50

Lab Sample ID: 360-43153-1
Matrix: Solid
Percent Solids: 89.0

Analyte	Result	Qualifier	RL	MDL	Unit	D	Prepared	Analyzed	Dil Fac
1,1,1,2-Tetrachloroethane	ND		3.0		ug/Kg	☼	10/09/12 11:21	10/09/12 16:32	1
1,1,1-Trichloroethane	ND		3.0		ug/Kg	☼	10/09/12 11:21	10/09/12 16:32	1
1,1,2,2-Tetrachloroethane	ND		3.0		ug/Kg	☼	10/09/12 11:21	10/09/12 16:32	1
1,1,2-Trichloroethane	ND		3.0		ug/Kg	☼	10/09/12 11:21	10/09/12 16:32	1
1,1-Dichloroethane	ND		3.0		ug/Kg	☼	10/09/12 11:21	10/09/12 16:32	1
1,1-Dichloroethene	ND		3.0		ug/Kg	☼	10/09/12 11:21	10/09/12 16:32	1
1,1-Dichloropropene	ND		3.0		ug/Kg	☼	10/09/12 11:21	10/09/12 16:32	1
1,2,3-Trichlorobenzene	ND		3.0		ug/Kg	☼	10/09/12 11:21	10/09/12 16:32	1
1,2,3-Trichloropropane	ND		3.0		ug/Kg	☼	10/09/12 11:21	10/09/12 16:32	1
1,2,4-Trichlorobenzene	ND		3.0		ug/Kg	☼	10/09/12 11:21	10/09/12 16:32	1
1,2,4-Trimethylbenzene	ND		3.0		ug/Kg	☼	10/09/12 11:21	10/09/12 16:32	1
1,2-Dibromo-3-Chloropropane	ND		30		ug/Kg	☼	10/09/12 11:21	10/09/12 16:32	1
1,2-Dichlorobenzene	ND		3.0		ug/Kg	☼	10/09/12 11:21	10/09/12 16:32	1
1,2-Dichloroethane	ND		3.0		ug/Kg	☼	10/09/12 11:21	10/09/12 16:32	1
1,2-Dichloropropane	ND		3.0		ug/Kg	☼	10/09/12 11:21	10/09/12 16:32	1
1,3,5-Trimethylbenzene	ND		3.0		ug/Kg	☼	10/09/12 11:21	10/09/12 16:32	1
1,3-Dichlorobenzene	ND		3.0		ug/Kg	☼	10/09/12 11:21	10/09/12 16:32	1
1,3-Dichloropropane	ND		3.0		ug/Kg	☼	10/09/12 11:21	10/09/12 16:32	1
1,4-Dichlorobenzene	ND		3.0		ug/Kg	☼	10/09/12 11:21	10/09/12 16:32	1
1,4-Dioxane	ND		300		ug/Kg	☼	10/09/12 11:21	10/09/12 16:32	1
2,2-Dichloropropane	ND		3.0		ug/Kg	☼	10/09/12 11:21	10/09/12 16:32	1
2-Butanone (MEK)	ND	*	30		ug/Kg	☼	10/09/12 11:21	10/09/12 16:32	1
2-Chlorotoluene	ND		3.0		ug/Kg	☼	10/09/12 11:21	10/09/12 16:32	1
2-Hexanone	ND		30		ug/Kg	☼	10/09/12 11:21	10/09/12 16:32	1
4-Chlorotoluene	ND		3.0		ug/Kg	☼	10/09/12 11:21	10/09/12 16:32	1
4-Isopropyltoluene	ND		3.0		ug/Kg	☼	10/09/12 11:21	10/09/12 16:32	1
4-Methyl-2-pentanone (MIBK)	ND		30		ug/Kg	☼	10/09/12 11:21	10/09/12 16:32	1
Acetone	ND		300		ug/Kg	☼	10/09/12 11:21	10/09/12 16:32	1
Benzene	ND		3.0		ug/Kg	☼	10/09/12 11:21	10/09/12 16:32	1
Bromobenzene	ND		3.0		ug/Kg	☼	10/09/12 11:21	10/09/12 16:32	1
Bromoform	ND		3.0		ug/Kg	☼	10/09/12 11:21	10/09/12 16:32	1
Bromomethane	ND	*	6.0		ug/Kg	☼	10/09/12 11:21	10/09/12 16:32	1
Carbon disulfide	ND		3.0		ug/Kg	☼	10/09/12 11:21	10/09/12 16:32	1
Carbon tetrachloride	ND		3.0		ug/Kg	☼	10/09/12 11:21	10/09/12 16:32	1
Chlorobenzene	ND		3.0		ug/Kg	☼	10/09/12 11:21	10/09/12 16:32	1
Chlorobromomethane	ND		3.0		ug/Kg	☼	10/09/12 11:21	10/09/12 16:32	1
Chlorodibromomethane	ND		3.0		ug/Kg	☼	10/09/12 11:21	10/09/12 16:32	1
Chloroethane	ND	*	6.0		ug/Kg	☼	10/09/12 11:21	10/09/12 16:32	1
Chloroform	ND		3.0		ug/Kg	☼	10/09/12 11:21	10/09/12 16:32	1
Chloromethane	ND		6.0		ug/Kg	☼	10/09/12 11:21	10/09/12 16:32	1
cis-1,2-Dichloroethene	ND		3.0		ug/Kg	☼	10/09/12 11:21	10/09/12 16:32	1
cis-1,3-Dichloropropene	ND		3.0		ug/Kg	☼	10/09/12 11:21	10/09/12 16:32	1
Dibromomethane	ND		3.0		ug/Kg	☼	10/09/12 11:21	10/09/12 16:32	1
Dichlorobromomethane	ND		3.0		ug/Kg	☼	10/09/12 11:21	10/09/12 16:32	1
Dichlorodifluoromethane	ND	*	6.0		ug/Kg	☼	10/09/12 11:21	10/09/12 16:32	1
Ethyl ether	ND		3.0		ug/Kg	☼	10/09/12 11:21	10/09/12 16:32	1
Ethylbenzene	ND		3.0		ug/Kg	☼	10/09/12 11:21	10/09/12 16:32	1
Ethylene Dibromide	ND		3.0		ug/Kg	☼	10/09/12 11:21	10/09/12 16:32	1
Hexachlorobutadiene	ND		3.0		ug/Kg	☼	10/09/12 11:21	10/09/12 16:32	1
Isopropyl ether	ND		3.0		ug/Kg	☼	10/09/12 11:21	10/09/12 16:32	1
Isopropylbenzene	ND		3.0		ug/Kg	☼	10/09/12 11:21	10/09/12 16:32	1

Method: 8260C - Volatile Organic Compounds (GC/MS) (Continued)

Client Sample ID: S-1-20121004-01 — **Lab Sample ID: 360-43153-1**
Date Collected: 10/04/12 09:30 — **Matrix: Solid**
Date Received: 10/05/12 19:50 — **Percent Solids: 89.0**

Analyte	Result	Qualifier	RL	MDL	Unit	D	Prepared	Analyzed	Dil Fac
m-Xylene & p-Xylene	ND		6.0		ug/Kg	☼	10/09/12 11:21	10/09/12 16:32	1
Methyl tert-butyl ether	ND		3.0		ug/Kg	☼	10/09/12 11:21	10/09/12 16:32	1
Methylene Chloride	ND		12		ug/Kg	☼	10/09/12 11:21	10/09/12 16:32	1
n-Butylbenzene	ND		3.0		ug/Kg	☼	10/09/12 11:21	10/09/12 16:32	1
N-Propylbenzene	ND		3.0		ug/Kg	☼	10/09/12 11:21	10/09/12 16:32	1
Naphthalene	ND		30		ug/Kg	☼	10/09/12 11:21	10/09/12 16:32	1
o-Xylene	ND		3.0		ug/Kg	☼	10/09/12 11:21	10/09/12 16:32	1
sec-Butylbenzene	ND		3.0		ug/Kg	☼	10/09/12 11:21	10/09/12 16:32	1
Styrene	ND		3.0		ug/Kg	☼	10/09/12 11:21	10/09/12 16:32	1
Tert-amyl methyl ether	ND		3.0		ug/Kg	☼	10/09/12 11:21	10/09/12 16:32	1
Tert-butyl ethyl ether	ND		3.0		ug/Kg	☼	10/09/12 11:21	10/09/12 16:32	1
tert-Butylbenzene	ND		3.0		ug/Kg	☼	10/09/12 11:21	10/09/12 16:32	1
Tetrachloroethene	ND		3.0		ug/Kg	☼	10/09/12 11:21	10/09/12 16:32	1
Tetrahydrofuran	ND		60		ug/Kg	☼	10/09/12 11:21	10/09/12 16:32	1
Toluene	ND		3.0		ug/Kg	☼	10/09/12 11:21	10/09/12 16:32	1
trans-1,2-Dichloroethene	ND		3.0		ug/Kg	☼	10/09/12 11:21	10/09/12 16:32	1
trans-1,3-Dichloropropene	ND		3.0		ug/Kg	☼	10/09/12 11:21	10/09/12 16:32	1
Trichloroethene	ND		3.0		ug/Kg	☼	10/09/12 11:21	10/09/12 16:32	1
Trichlorofluoromethane	ND		6.0		ug/Kg	☼	10/09/12 11:21	10/09/12 16:32	1
Vinyl chloride	ND		3.0		ug/Kg	☼	10/09/12 11:21	10/09/12 16:32	1

Surrogate	*%Recovery*	*Qualifier*	*Limits*	*Prepared*	*Analyzed*	*Dil Fac*
4-Bromofluorobenzene	*107*		*70 - 130*	*10/09/12 11:21*	*10/09/12 16:32*	*1*
Dibromofluoromethane	*100*		*70 - 130*	*10/09/12 11:21*	*10/09/12 16:32*	*1*
Toluene-d8 (Surr)	*107*		*70 - 130*	*10/09/12 11:21*	*10/09/12 16:32*	*1*

Client Sample ID: S-2-20121004-01 — **Lab Sample ID: 360-43153-2**
Date Collected: 10/04/12 09:45 — **Matrix: Solid**
Date Received: 10/05/12 19:50 — **Percent Solids: 85.2**

Analyte	Result	Qualifier	RL	MDL	Unit	D	Prepared	Analyzed	Dil Fac
1,1,1,2-Tetrachloroethane	ND		2.3		ug/Kg	☼	10/09/12 11:21	10/09/12 15:46	1
1,1,1-Trichloroethane	ND		2.3		ug/Kg	☼	10/09/12 11:21	10/09/12 15:46	1
1,1,2,2-Tetrachloroethane	ND		2.3		ug/Kg	☼	10/09/12 11:21	10/09/12 15:46	1
1,1,2-Trichloroethane	ND		2.3		ug/Kg	☼	10/09/12 11:21	10/09/12 15:46	1
1,1-Dichloroethane	ND		2.3		ug/Kg	☼	10/09/12 11:21	10/09/12 15:46	1
1,1-Dichloroethene	ND		2.3		ug/Kg	☼	10/09/12 11:21	10/09/12 15:46	1
1,1-Dichloropropene	ND		2.3		ug/Kg	☼	10/09/12 11:21	10/09/12 15:46	1
1,2,3-Trichlorobenzene	ND		2.3		ug/Kg	☼	10/09/12 11:21	10/09/12 15:46	1
1,2,3-Trichloropropane	ND		2.3		ug/Kg	☼	10/09/12 11:21	10/09/12 15:46	1
1,2,4-Trichlorobenzene	ND		2.3		ug/Kg	☼	10/09/12 11:21	10/09/12 15:46	1
1,2,4-Trimethylbenzene	ND		2.3		ug/Kg	☼	10/09/12 11:21	10/09/12 15:46	1
1,2-Dibromo-3-Chloropropane	ND		23		ug/Kg	☼	10/09/12 11:21	10/09/12 15:46	1
1,2-Dichlorobenzene	ND		2.3		ug/Kg	☼	10/09/12 11:21	10/09/12 15:46	1
1,2-Dichloroethane	ND		2.3		ug/Kg	☼	10/09/12 11:21	10/09/12 15:46	1
1,2-Dichloropropane	ND		2.3		ug/Kg	☼	10/09/12 11:21	10/09/12 15:46	1
1,3,5-Trimethylbenzene	ND		2.3		ug/Kg	☼	10/09/12 11:21	10/09/12 15:46	1
1,3-Dichlorobenzene	ND		2.3		ug/Kg	☼	10/09/12 11:21	10/09/12 15:46	1
1,3-Dichloropropane	ND		2.3		ug/Kg	☼	10/09/12 11:21	10/09/12 15:46	1
1,4-Dichlorobenzene	ND		2.3		ug/Kg	☼	10/09/12 11:21	10/09/12 15:46	1
1,4-Dioxane	ND		230		ug/Kg	☼	10/09/12 11:21	10/09/12 15:46	1
2,2-Dichloropropane	ND		2.3		ug/Kg	☼	10/09/12 11:21	10/09/12 15:46	1

Method: 8260C - Volatile Organic Compounds (GC/MS) (Continued)

Client Sample ID: S-2-20121004-01
Date Collected: 10/04/12 09:45
Date Received: 10/05/12 19:50

Lab Sample ID: 360-43153-2
Matrix: Solid
Percent Solids: 85.2

Analyte	Result	Qualifier	RL	MDL	Unit	D	Prepared	Analyzed	Dil Fac
2-Butanone (MEK)	ND	*	23		ug/Kg	☼	10/09/12 11:21	10/09/12 15:46	1
2-Chlorotoluene	ND		2.3		ug/Kg	☼	10/09/12 11:21	10/09/12 15:46	1
2-Hexanone	ND		23		ug/Kg	☼	10/09/12 11:21	10/09/12 15:46	1
4-Chlorotoluene	ND		2.3		ug/Kg	☼	10/09/12 11:21	10/09/12 15:46	1
4-Isopropyltoluene	ND		2.3		ug/Kg	☼	10/09/12 11:21	10/09/12 15:46	1
4-Methyl-2-pentanone (MIBK)	ND		23		ug/Kg	☼	10/09/12 11:21	10/09/12 15:46	1
Acetone	ND		230		ug/Kg	☼	10/09/12 11:21	10/09/12 15:46	1
Benzene	ND		2.3		ug/Kg	☼	10/09/12 11:21	10/09/12 15:46	1
Bromobenzene	ND		2.3		ug/Kg	☼	10/09/12 11:21	10/09/12 15:46	1
Bromoform	ND		2.3		ug/Kg	☼	10/09/12 11:21	10/09/12 15:46	1
Bromomethane	ND	*	4.6		ug/Kg	☼	10/09/12 11:21	10/09/12 15:46	1
Carbon disulfide	ND		2.3		ug/Kg	☼	10/09/12 11:21	10/09/12 15:46	1
Carbon tetrachloride	ND		2.3		ug/Kg	☼	10/09/12 11:21	10/09/12 15:46	1
Chlorobenzene	ND		2.3		ug/Kg	☼	10/09/12 11:21	10/09/12 15:46	1
Chlorobromomethane	ND		2.3		ug/Kg	☼	10/09/12 11:21	10/09/12 15:46	1
Chlorodibromomethane	ND		2.3		ug/Kg	☼	10/09/12 11:21	10/09/12 15:46	1
Chloroethane	ND	*	4.6		ug/Kg	☼	10/09/12 11:21	10/09/12 15:46	1
Chloroform	ND		2.3		ug/Kg	☼	10/09/12 11:21	10/09/12 15:46	1
Chloromethane	ND		4.6		ug/Kg	☼	10/09/12 11:21	10/09/12 15:46	1
cis-1,2-Dichloroethene	ND		2.3		ug/Kg	☼	10/09/12 11:21	10/09/12 15:46	1
cis-1,3-Dichloropropene	ND		2.3		ug/Kg	☼	10/09/12 11:21	10/09/12 15:46	1
Dibromomethane	ND		2.3		ug/Kg	☼	10/09/12 11:21	10/09/12 15:46	1
Dichlorobromomethane	ND		2.3		ug/Kg	☼	10/09/12 11:21	10/09/12 15:46	1
Dichlorodifluoromethane	ND	*	4.6		ug/Kg	☼	10/09/12 11:21	10/09/12 15:46	1
Ethyl ether	ND		2.3		ug/Kg	☼	10/09/12 11:21	10/09/12 15:46	1
Ethylbenzene	ND		2.3		ug/Kg	☼	10/09/12 11:21	10/09/12 15:46	1
Ethylene Dibromide	ND		2.3		ug/Kg	☼	10/09/12 11:21	10/09/12 15:46	1
Hexachlorobutadiene	ND		2.3		ug/Kg	☼	10/09/12 11:21	10/09/12 15:46	1
Isopropyl ether	ND		2.3		ug/Kg	☼	10/09/12 11:21	10/09/12 15:46	1
Isopropylbenzene	ND		2.3		ug/Kg	☼	10/09/12 11:21	10/09/12 15:46	1
m-Xylene & p-Xylene	ND		4.6		ug/Kg	☼	10/09/12 11:21	10/09/12 15:46	1
Methyl tert-butyl ether	ND		2.3		ug/Kg	☼	10/09/12 11:21	10/09/12 15:46	1
Methylene Chloride	ND		9.3		ug/Kg	☼	10/09/12 11:21	10/09/12 15:46	1
n-Butylbenzene	ND		2.3		ug/Kg	☼	10/09/12 11:21	10/09/12 15:46	1
N-Propylbenzene	ND		2.3		ug/Kg	☼	10/09/12 11:21	10/09/12 15:46	1
Naphthalene	ND		23		ug/Kg	☼	10/09/12 11:21	10/09/12 15:46	1
o-Xylene	ND		2.3		ug/Kg	☼	10/09/12 11:21	10/09/12 15:46	1
sec-Butylbenzene	ND		2.3		ug/Kg	☼	10/09/12 11:21	10/09/12 15:46	1
Styrene	ND		2.3		ug/Kg	☼	10/09/12 11:21	10/09/12 15:46	1
Tert-amyl methyl ether	ND		2.3		ug/Kg	☼	10/09/12 11:21	10/09/12 15:46	1
Tert-butyl ethyl ether	ND		2.3		ug/Kg	☼	10/09/12 11:21	10/09/12 15:46	1
tert-Butylbenzene	ND		2.3		ug/Kg	☼	10/09/12 11:21	10/09/12 15:46	1
Tetrachloroethene	ND		2.3		ug/Kg	☼	10/09/12 11:21	10/09/12 15:46	1
Tetrahydrofuran	ND		46		ug/Kg	☼	10/09/12 11:21	10/09/12 15:46	1
Toluene	ND		2.3		ug/Kg	☼	10/09/12 11:21	10/09/12 15:46	1
trans-1,2-Dichloroethene	ND		2.3		ug/Kg	☼	10/09/12 11:21	10/09/12 15:46	1
trans-1,3-Dichloropropene	ND		2.3		ug/Kg	☼	10/09/12 11:21	10/09/12 15:46	1
Trichloroethene	ND		2.3		ug/Kg	☼	10/09/12 11:21	10/09/12 15:46	1
Trichlorofluoromethane	ND		4.6		ug/Kg	☼	10/09/12 11:21	10/09/12 15:46	1
Vinyl chloride	ND		2.3		ug/Kg	☼	10/09/12 11:21	10/09/12 15:46	1

Method: 8260C - Volatile Organic Compounds (GC/MS) (Continued)

Surrogate	%Recovery	Qualifier	Limits	Prepared	Analyzed	Dil Fac
4-Bromofluorobenzene	102		70 - 130	10/09/12 11:21	10/09/12 15:46	1
Dibromofluoromethane	100		70 - 130	10/09/12 11:21	10/09/12 15:46	1
Toluene-d8 (Surr)	104		70 - 130	10/09/12 11:21	10/09/12 15:46	1

Client Sample ID: S-3-20121004-01 **Lab Sample ID: 360-43153-3**
Date Collected: 10/04/12 10:00 **Matrix: Solid**
Date Received: 10/05/12 19:50 **Percent Solids: 82.2**

Analyte	Result	Qualifier	RL	MDL	Unit	D	Prepared	Analyzed	Dil Fac
1,1,1,2-Tetrachloroethane	ND		2.4		ug/Kg	☼	10/09/12 11:21	10/09/12 16:09	1
1,1,1-Trichloroethane	ND		2.4		ug/Kg	☼	10/09/12 11:21	10/09/12 16:09	1
1,1,2,2-Tetrachloroethane	ND		2.4		ug/Kg	☼	10/09/12 11:21	10/09/12 16:09	1
1,1,2-Trichloroethane	ND		2.4		ug/Kg	☼	10/09/12 11:21	10/09/12 16:09	1
1,1-Dichloroethane	ND		2.4		ug/Kg	☼	10/09/12 11:21	10/09/12 16:09	1
1,1-Dichloroethene	ND		2.4		ug/Kg	☼	10/09/12 11:21	10/09/12 16:09	1
1,1-Dichloropropene	ND		2.4		ug/Kg	☼	10/09/12 11:21	10/09/12 16:09	1
1,2,3-Trichlorobenzene	ND		2.4		ug/Kg	☼	10/09/12 11:21	10/09/12 16:09	1
1,2,3-Trichloropropane	ND		2.4		ug/Kg	☼	10/09/12 11:21	10/09/12 16:09	1
1,2,4-Trichlorobenzene	ND		2.4		ug/Kg	☼	10/09/12 11:21	10/09/12 16:09	1
1,2,4-Trimethylbenzene	ND		2.4		ug/Kg	☼	10/09/12 11:21	10/09/12 16:09	1
1,2-Dibromo-3-Chloropropane	ND		24		ug/Kg	☼	10/09/12 11:21	10/09/12 16:09	1
1,2-Dichlorobenzene	ND		2.4		ug/Kg	☼	10/09/12 11:21	10/09/12 16:09	1
1,2-Dichloroethane	ND		2.4		ug/Kg	☼	10/09/12 11:21	10/09/12 16:09	1
1,2-Dichloropropane	ND		2.4		ug/Kg	☼	10/09/12 11:21	10/09/12 16:09	1
1,3,5-Trimethylbenzene	ND		2.4		ug/Kg	☼	10/09/12 11:21	10/09/12 16:09	1
1,3-Dichlorobenzene	ND		2.4		ug/Kg	☼	10/09/12 11:21	10/09/12 16:09	1
1,3-Dichloropropane	ND		2.4		ug/Kg	☼	10/09/12 11:21	10/09/12 16:09	1
1,4-Dichlorobenzene	ND		2.4		ug/Kg	☼	10/09/12 11:21	10/09/12 16:09	1
1,4-Dioxane	ND		240		ug/Kg	☼	10/09/12 11:21	10/09/12 16:09	1
2,2-Dichloropropane	ND		2.4		ug/Kg	☼	10/09/12 11:21	10/09/12 16:09	1
2-Butanone (MEK)	ND	*	24		ug/Kg	☼	10/09/12 11:21	10/09/12 16:09	1
2-Chlorotoluene	ND		2.4		ug/Kg	☼	10/09/12 11:21	10/09/12 16:09	1
2-Hexanone	ND		24		ug/Kg	☼	10/09/12 11:21	10/09/12 16:09	1
4-Chlorotoluene	ND		2.4		ug/Kg	☼	10/09/12 11:21	10/09/12 16:09	1
4-Isopropyltoluene	ND		2.4		ug/Kg	☼	10/09/12 11:21	10/09/12 16:09	1
4-Methyl-2-pentanone (MIBK)	ND		24		ug/Kg	☼	10/09/12 11:21	10/09/12 16:09	1
Acetone	ND		240		ug/Kg	☼	10/09/12 11:21	10/09/12 16:09	1
Benzene	ND		2.4		ug/Kg	☼	10/09/12 11:21	10/09/12 16:09	1
Bromobenzene	ND		2.4		ug/Kg	☼	10/09/12 11:21	10/09/12 16:09	1
Bromoform	ND		2.4		ug/Kg	☼	10/09/12 11:21	10/09/12 16:09	1
Bromomethane	ND	*	4.7		ug/Kg	☼	10/09/12 11:21	10/09/12 16:09	1
Carbon disulfide	ND		2.4		ug/Kg	☼	10/09/12 11:21	10/09/12 16:09	1
Carbon tetrachloride	ND		2.4		ug/Kg	☼	10/09/12 11:21	10/09/12 16:09	1
Chlorobenzene	ND		2.4		ug/Kg	☼	10/09/12 11:21	10/09/12 16:09	1
Chlorobromomethane	ND		2.4		ug/Kg	☼	10/09/12 11:21	10/09/12 16:09	1
Chlorodibromomethane	ND		2.4		ug/Kg	☼	10/09/12 11:21	10/09/12 16:09	1
Chloroethane	ND	*	4.7		ug/Kg	☼	10/09/12 11:21	10/09/12 16:09	1
Chloroform	ND		2.4		ug/Kg	☼	10/09/12 11:21	10/09/12 16:09	1
Chloromethane	ND		4.7		ug/Kg	☼	10/09/12 11:21	10/09/12 16:09	1
cis-1,2-Dichloroethene	ND		2.4		ug/Kg	☼	10/09/12 11:21	10/09/12 16:09	1
cis-1,3-Dichloropropene	ND		2.4		ug/Kg	☼	10/09/12 11:21	10/09/12 16:09	1
Dibromomethane	ND		2.4		ug/Kg	☼	10/09/12 11:21	10/09/12 16:09	1
Dichlorobromomethane	ND		2.4		ug/Kg	☼	10/09/12 11:21	10/09/12 16:09	1
Dichlorodifluoromethane	ND	*	4.7		ug/Kg	☼	10/09/12 11:21	10/09/12 16:09	1
Ethyl ether	ND		2.4		ug/Kg	☼	10/09/12 11:21	10/09/12 16:09	1

Method: 8260C - Volatile Organic Compounds (GC/MS) (Continued)

Client Sample ID: S-3-20121004-01
Date Collected: 10/04/12 10:00
Date Received: 10/05/12 19:50

Lab Sample ID: 360-43153-3
Matrix: Solid
Percent Solids: 82.2

Analyte	Result	Qualifier	RL	MDL	Unit	D	Prepared	Analyzed	Dil Fac
Ethylbenzene	ND		2.4		ug/Kg	☼	10/09/12 11:21	10/09/12 16:09	1
Ethylene Dibromide	ND		2.4		ug/Kg	☼	10/09/12 11:21	10/09/12 16:09	1
Hexachlorobutadiene	ND		2.4		ug/Kg	☼	10/09/12 11:21	10/09/12 16:09	1
Isopropyl ether	ND		2.4		ug/Kg	☼	10/09/12 11:21	10/09/12 16:09	1
Isopropylbenzene	ND		2.4		ug/Kg	☼	10/09/12 11:21	10/09/12 16:09	1
m-Xylene & p-Xylene	ND		4.7		ug/Kg	☼	10/09/12 11:21	10/09/12 16:09	1
Methyl tert-butyl ether	ND		2.4		ug/Kg	☼	10/09/12 11:21	10/09/12 16:09	1
Methylene Chloride	ND		9.5		ug/Kg	☼	10/09/12 11:21	10/09/12 16:09	1
n-Butylbenzene	ND		2.4		ug/Kg	☼	10/09/12 11:21	10/09/12 16:09	1
N-Propylbenzene	ND		2.4		ug/Kg	☼	10/09/12 11:21	10/09/12 16:09	1
Naphthalene	ND		24		ug/Kg	☼	10/09/12 11:21	10/09/12 16:09	1
o-Xylene	ND		2.4		ug/Kg	☼	10/09/12 11:21	10/09/12 16:09	1
sec-Butylbenzene	ND		2.4		ug/Kg	☼	10/09/12 11:21	10/09/12 16:09	1
Styrene	ND		2.4		ug/Kg	☼	10/09/12 11:21	10/09/12 16:09	1
Tert-amyl methyl ether	ND		2.4		ug/Kg	☼	10/09/12 11:21	10/09/12 16:09	1
Tert-butyl ethyl ether	ND		2.4		ug/Kg	☼	10/09/12 11:21	10/09/12 16:09	1
tert-Butylbenzene	ND		2.4		ug/Kg	☼	10/09/12 11:21	10/09/12 16:09	1
Tetrachloroethene	ND		2.4		ug/Kg	☼	10/09/12 11:21	10/09/12 16:09	1
Tetrahydrofuran	ND		47		ug/Kg	☼	10/09/12 11:21	10/09/12 16:09	1
Toluene	ND		2.4		ug/Kg	☼	10/09/12 11:21	10/09/12 16:09	1
trans-1,2-Dichloroethene	ND		2.4		ug/Kg	☼	10/09/12 11:21	10/09/12 16:09	1
trans-1,3-Dichloropropene	ND		2.4		ug/Kg	☼	10/09/12 11:21	10/09/12 16:09	1
Trichloroethene	ND		2.4		ug/Kg	☼	10/09/12 11:21	10/09/12 16:09	1
Trichlorofluoromethane	ND		4.7		ug/Kg	☼	10/09/12 11:21	10/09/12 16:09	1
Vinyl chloride	ND		2.4		ug/Kg	☼	10/09/12 11:21	10/09/12 16:09	1

Surrogate	*%Recovery*	*Qualifier*	*Limits*	*Prepared*	*Analyzed*	*Dil Fac*
4-Bromofluorobenzene	*103*		*70 - 130*	*10/09/12 16:30*	*10/09/12 17:40*	*1*
Dibromofluoromethane	*76*		*70 - 130*	*10/09/12 16:30*	*10/09/12 17:40*	*1*
Toluene-d8 (Surr)	*107*		*70 - 130*	*10/09/12 16:30*	*10/09/12 17:40*	*1*

General Chemistry

Client Sample ID: S-1-20121004-01 **Lab Sample ID: 360-43153-1**
Date Collected: 10/04/12 09:30 **Matrix: Solid**
Date Received: 10/05/12 19:50

Analyte	Result	Qualifier	RL	RL	Unit	D	Prepared	Analyzed	Dil Fac
Percent Moisture	11		1.0		%			10/09/12 17:10	1
Percent Solids	89		1.0		%			10/09/12 17:10	1

Client Sample ID: S-2-20121004-01 **Lab Sample ID: 360-43153-2**
Date Collected: 10/04/12 09:45 **Matrix: Solid**
Date Received: 10/05/12 19:50

Analyte	Result	Qualifier	RL	RL	Unit	D	Prepared	Analyzed	Dil Fac
Percent Moisture	15		1.0		%			10/09/12 17:10	1
Percent Solids	85		1.0		%			10/09/12 17:10	1

Client Sample ID: S-3-20121004-01 **Lab Sample ID: 360-43153-3**
Date Collected: 10/04/12 10:00 **Matrix: Solid**
Date Received: 10/05/12 19:50

Analyte	Result	Qualifier	RL	RL	Unit	D	Prepared	Analyzed	Dil Fac
Percent Moisture	18		1.0		%			10/09/12 17:10	1
Percent Solids	82		1.0		%			10/09/12 17:10	1

Qualifiers

GC/MS VOA

Qualifier	Qualifier Description
*	LCS or LCSD exceeds the control limits

Glossary

Abbreviation	These commonly used abbreviations may or may not be present in this report.
☼	Listed under the "D" column to designate that the result is reported on a dry weight basis
%R	Percent Recovery
CNF	Contains no Free Liquid
DL, RA, RE, IN	Indicates a Dilution, Reanalysis, Re-extraction, or additional Initial metals/anion analysis of the sample
EDL	Estimated Detection Limit
EPA	United States Environmental Protection Agency
MDL	Method Detection Limit
ML	Minimum Level (Dioxin)
ND	Not detected at the reporting limit (or MDL or EDL if shown)
PQL	Practical Quantitation Limit
QC	Quality Control
RL	Reporting Limit
RPD	Relative Percent Difference, a measure of the relative difference between two points
TEF	Toxicity Equivalent Factor (Dioxin)
TEQ	Toxicity Equivalent Quotient (Dioxin)

QC Association Summary

Client: ERM-Northeast
Project/Site: IDS Wayland

TestAmerica Job ID: 360-43153-1

GC/MS VOA

Analysis Batch: 96403

Lab Sample ID	Client Sample ID	Prep Type	Matrix	Method	Prep Batch
360-43153-1	S-1-20121004-01	Total/NA	Solid	8260C	96421
360-43153-2	S-2-20121004-01	Total/NA	Solid	8260C	96421
360-43153-3	S-3-20121004-01	Total/NA	Solid	8260C	96421
360-43153-3	S-3-20121004-01	Total/NA	Solid	8260C	96421
LCS 360-96421/1-A	Lab Control Sample	Total/NA	Solid	8260C	96421
LCSD 360-96421/2-A	Lab Control Sample Dup	Total/NA	Solid	8260C	96421
MB 360-96421/3-A	Method Blank	Total/NA	Solid	8260C	96421

Prep Batch: 96421

Lab Sample ID	Client Sample ID	Prep Type	Matrix	Method	Prep Batch
360-43153-1	S-1-20121004-01	Total/NA	Solid	5035	
360-43153-2	S-2-20121004-01	Total/NA	Solid	5035	
360-43153-3	S-3-20121004-01	Total/NA	Solid	5035	
360-43153-3	S-3-20121004-01	Total/NA	Solid	5035	
LCS 360-96421/1-A	Lab Control Sample	Total/NA	Solid	5035	
LCSD 360-96421/2-A	Lab Control Sample Dup	Total/NA	Solid	5035	
MB 360-96421/3-A	Method Blank	Total/NA	Solid	5035	

General Chemistry

Analysis Batch: 96445

Lab Sample ID	Client Sample ID	Prep Type	Matrix	Method	Prep Batch
360-43153-1	S-1-20121004-01	Total/NA	Solid	Moisture	
360-43153-2	S-2-20121004-01	Total/NA	Solid	Moisture	
360-43153-3	S-3-20121004-01	Total/NA	Solid	Moisture	

Surrogate Summary

Client: ERM-Northeast
Project/Site: IDS Wayland

TestAmerica Job ID: 360-43153-1

Method: 8260C - Volatile Organic Compounds (GC/MS)

Matrix: Solid **Prep Type: Total/NA**

		Percent Surrogate Recovery (Acceptance Limits)		
		BFB	DBFM	TOL
Lab Sample ID	Client Sample ID	(70-130)	(70-130)	(70-130)
360-43153-1	S-1-20121004-01	107	100	107
360-43153-2	S-2-20121004-01	102	100	104
360-43153-3	S-3-20121004-01	103	76	107
LCS 360-96421/1-A	Lab Control Sample	104	99	106
LCSD 360-96421/2-A	Lab Control Sample Dup	103	100	106
MB 360-96421/3-A	Method Blank	101	95	106

Surrogate Legend

BFB = 4-Bromofluorobenzene
DBFM = Dibromofluoromethane
TOL = Toluene-d8 (Surr)

Method: 8260C - Volatile Organic Compounds (GC/MS)

Lab Sample ID: MB 360-96421/3-A
Matrix: Solid
Analysis Batch: 96403

Client Sample ID: Method Blank
Prep Type: Total/NA
Prep Batch: 96421

Analyte	MB Result	MB Qualifier	RL	MDL	Unit	D	Prepared	Analyzed	Dil Fac
1,1,1,2-Tetrachloroethane	ND		2.5		ug/Kg		10/09/12 10:00	10/09/12 11:59	1
1,1,1-Trichloroethane	ND		2.5		ug/Kg		10/09/12 10:00	10/09/12 11:59	1
1,1,2,2-Tetrachloroethane	ND		2.5		ug/Kg		10/09/12 10:00	10/09/12 11:59	1
1,1,2-Trichloroethane	ND		2.5		ug/Kg		10/09/12 10:00	10/09/12 11:59	1
1,1-Dichloroethane	ND		2.5		ug/Kg		10/09/12 10:00	10/09/12 11:59	1
1,1-Dichloroethene	ND		2.5		ug/Kg		10/09/12 10:00	10/09/12 11:59	1
1,1-Dichloropropene	ND		2.5		ug/Kg		10/09/12 10:00	10/09/12 11:59	1
1,2,3-Trichlorobenzene	2.74		2.5		ug/Kg		10/09/12 10:00	10/09/12 11:59	1
1,2,3-Trichloropropane	ND		2.5		ug/Kg		10/09/12 10:00	10/09/12 11:59	1
1,2,4-Trichlorobenzene	ND		2.5		ug/Kg		10/09/12 10:00	10/09/12 11:59	1
1,2,4-Trimethylbenzene	ND		2.5		ug/Kg		10/09/12 10:00	10/09/12 11:59	1
1,2-Dibromo-3-Chloropropane	ND		25		ug/Kg		10/09/12 10:00	10/09/12 11:59	1
1,2-Dichlorobenzene	ND		2.5		ug/Kg		10/09/12 10:00	10/09/12 11:59	1
1,2-Dichloroethane	ND		2.5		ug/Kg		10/09/12 10:00	10/09/12 11:59	1
1,2-Dichloropropane	ND		2.5		ug/Kg		10/09/12 10:00	10/09/12 11:59	1
1,3,5-Trimethylbenzene	ND		2.5		ug/Kg		10/09/12 10:00	10/09/12 11:59	1
1,3-Dichlorobenzene	ND		2.5		ug/Kg		10/09/12 10:00	10/09/12 11:59	1
1,3-Dichloropropane	ND		2.5		ug/Kg		10/09/12 10:00	10/09/12 11:59	1
1,4-Dichlorobenzene	ND		2.5		ug/Kg		10/09/12 10:00	10/09/12 11:59	1
1,4-Dioxane	ND		250		ug/Kg		10/09/12 10:00	10/09/12 11:59	1
2,2-Dichloropropane	ND		2.5		ug/Kg		10/09/12 10:00	10/09/12 11:59	1
2-Butanone (MEK)	ND		25		ug/Kg		10/09/12 10:00	10/09/12 11:59	1
2-Chlorotoluene	ND		2.5		ug/Kg		10/09/12 10:00	10/09/12 11:59	1
2-Hexanone	ND		25		ug/Kg		10/09/12 10:00	10/09/12 11:59	1
4-Chlorotoluene	ND		2.5		ug/Kg		10/09/12 10:00	10/09/12 11:59	1
4-Isopropyltoluene	ND		2.5		ug/Kg		10/09/12 10:00	10/09/12 11:59	1
4-Methyl-2-pentanone (MIBK)	ND		25		ug/Kg		10/09/12 10:00	10/09/12 11:59	1
Acetone	ND		250		ug/Kg		10/09/12 10:00	10/09/12 11:59	1
Benzene	ND		2.5		ug/Kg		10/09/12 10:00	10/09/12 11:59	1
Bromobenzene	ND		2.5		ug/Kg		10/09/12 10:00	10/09/12 11:59	1
Bromoform	ND		2.5		ug/Kg		10/09/12 10:00	10/09/12 11:59	1
Bromomethane	ND		5.0		ug/Kg		10/09/12 10:00	10/09/12 11:59	1
Carbon disulfide	ND		2.5		ug/Kg		10/09/12 10:00	10/09/12 11:59	1
Carbon tetrachloride	ND		2.5		ug/Kg		10/09/12 10:00	10/09/12 11:59	1
Chlorobenzene	ND		2.5		ug/Kg		10/09/12 10:00	10/09/12 11:59	1
Chlorobromomethane	ND		2.5		ug/Kg		10/09/12 10:00	10/09/12 11:59	1
Chlorodibromomethane	ND		2.5		ug/Kg		10/09/12 10:00	10/09/12 11:59	1
Chloroethane	ND		5.0		ug/Kg		10/09/12 10:00	10/09/12 11:59	1
Chloroform	ND		2.5		ug/Kg		10/09/12 10:00	10/09/12 11:59	1
Chloromethane	ND		5.0		ug/Kg		10/09/12 10:00	10/09/12 11:59	1
cis-1,2-Dichloroethene	ND		2.5		ug/Kg		10/09/12 10:00	10/09/12 11:59	1
cis-1,3-Dichloropropene	ND		2.5		ug/Kg		10/09/12 10:00	10/09/12 11:59	1
Dibromomethane	ND		2.5		ug/Kg		10/09/12 10:00	10/09/12 11:59	1
Dichlorobromomethane	ND		2.5		ug/Kg		10/09/12 10:00	10/09/12 11:59	1
Dichlorodifluoromethane	ND		5.0		ug/Kg		10/09/12 10:00	10/09/12 11:59	1
Ethyl ether	ND		2.5		ug/Kg		10/09/12 10:00	10/09/12 11:59	1
Ethylbenzene	ND		2.5		ug/Kg		10/09/12 10:00	10/09/12 11:59	1
Ethylene Dibromide	ND		2.5		ug/Kg		10/09/12 10:00	10/09/12 11:59	1
Hexachlorobutadiene	ND		2.5		ug/Kg		10/09/12 10:00	10/09/12 11:59	1

Method: 8260C - Volatile Organic Compounds (GC/MS) (Continued)

Lab Sample ID: MB 360-96421/3-A
Matrix: Solid
Analysis Batch: 96403

Client Sample ID: Method Blank
Prep Type: Total/NA
Prep Batch: 96421

Analyte	MB Result	MB Qualifier	RL	MDL	Unit	D	Prepared	Analyzed	Dil Fac
Isopropyl ether	ND		2.5		ug/Kg		10/09/12 10:00	10/09/12 11:59	1
Isopropylbenzene	ND		2.5		ug/Kg		10/09/12 10:00	10/09/12 11:59	1
m-Xylene & p-Xylene	ND		5.0		ug/Kg		10/09/12 10:00	10/09/12 11:59	1
Methyl tert-butyl ether	ND		2.5		ug/Kg		10/09/12 10:00	10/09/12 11:59	1
Methylene Chloride	ND		10		ug/Kg		10/09/12 10:00	10/09/12 11:59	1
n-Butylbenzene	ND		2.5		ug/Kg		10/09/12 10:00	10/09/12 11:59	1
N-Propylbenzene	ND		2.5		ug/Kg		10/09/12 10:00	10/09/12 11:59	1
Naphthalene	ND		25		ug/Kg		10/09/12 10:00	10/09/12 11:59	1
o-Xylene	ND		2.5		ug/Kg		10/09/12 10:00	10/09/12 11:59	1
sec-Butylbenzene	ND		2.5		ug/Kg		10/09/12 10:00	10/09/12 11:59	1
Styrene	ND		2.5		ug/Kg		10/09/12 10:00	10/09/12 11:59	1
Tert-amyl methyl ether	ND		2.5		ug/Kg		10/09/12 10:00	10/09/12 11:59	1
Tert-butyl ethyl ether	ND		2.5		ug/Kg		10/09/12 10:00	10/09/12 11:59	1
tert-Butylbenzene	ND		2.5		ug/Kg		10/09/12 10:00	10/09/12 11:59	1
Tetrachloroethene	ND		2.5		ug/Kg		10/09/12 10:00	10/09/12 11:59	1
Tetrahydrofuran	ND		50		ug/Kg		10/09/12 10:00	10/09/12 11:59	1
Toluene	ND		2.5		ug/Kg		10/09/12 10:00	10/09/12 11:59	1
trans-1,2-Dichloroethene	ND		2.5		ug/Kg		10/09/12 10:00	10/09/12 11:59	1
trans-1,3-Dichloropropene	ND		2.5		ug/Kg		10/09/12 10:00	10/09/12 11:59	1
Trichloroethene	ND		2.5		ug/Kg		10/09/12 10:00	10/09/12 11:59	1
Trichlorofluoromethane	ND		5.0		ug/Kg		10/09/12 10:00	10/09/12 11:59	1
Vinyl chloride	ND		2.5		ug/Kg		10/09/12 10:00	10/09/12 11:59	1

Surrogate	*MB %Recovery*	*MB Qualifier*	*Limits*	*Prepared*	*Analyzed*	*Dil Fac*
4-Bromofluorobenzene	*101*		*70 - 130*	*10/09/12 10:00*	*10/09/12 11:59*	*1*
Dibromofluoromethane	*95*		*70 - 130*	*10/09/12 10:00*	*10/09/12 11:59*	*1*
Toluene-d8 (Surr)	*106*		*70 - 130*	*10/09/12 10:00*	*10/09/12 11:59*	*1*

Lab Sample ID: LCS 360-96421/1-A
Matrix: Solid
Analysis Batch: 96403

Client Sample ID: Lab Control Sample
Prep Type: Total/NA
Prep Batch: 96421

Analyte	Spike Added	LCS Result	LCS Qualifier	Unit	D	%Rec	%Rec. Limits
1,1,1,2-Tetrachloroethane	100	87.1		ug/Kg		87	70 - 130
1,1,1-Trichloroethane	100	109		ug/Kg		109	70 - 130
1,1,2,2-Tetrachloroethane	100	88.8		ug/Kg		89	70 - 130
1,1,2-Trichloroethane	100	97.0		ug/Kg		97	70 - 130
1,1-Dichloroethane	100	120		ug/Kg		120	70 - 130
1,1-Dichloroethene	100	88.7		ug/Kg		89	70 - 130
1,1-Dichloropropene	100	105		ug/Kg		105	70 - 130
1,2,3-Trichlorobenzene	100	87.6		ug/Kg		88	70 - 130
1,2,3-Trichloropropane	100	88.4		ug/Kg		88	70 - 130
1,2,4-Trichlorobenzene	100	92.3		ug/Kg		92	70 - 130
1,2,4-Trimethylbenzene	100	94.5		ug/Kg		94	70 - 130
1,2-Dibromo-3-Chloropropane	100	99.3		ug/Kg		99	70 - 130
1,2-Dichlorobenzene	100	89.2		ug/Kg		89	70 - 130
1,2-Dichloroethane	100	96.6		ug/Kg		97	70 - 130
1,2-Dichloropropane	100	95.1		ug/Kg		95	70 - 130
1,3,5-Trimethylbenzene	100	93.1		ug/Kg		93	70 - 130

Method: 8260C - Volatile Organic Compounds (GC/MS) (Continued)

Lab Sample ID: LCS 360-96421/1-A
Matrix: Solid
Analysis Batch: 96403

Client Sample ID: Lab Control Sample
Prep Type: Total/NA
Prep Batch: 96421

Analyte	Spike Added	LCS Result	LCS Qualifier	Unit	D	%Rec	%Rec. Limits
1,3-Dichlorobenzene	100	88.6		ug/Kg		89	70 - 130
1,3-Dichloropropane	100	101		ug/Kg		101	70 - 130
1,4-Dichlorobenzene	100	88.1		ug/Kg		88	70 - 130
1,4-Dioxane	1000	1170		ug/Kg		117	70 - 130
2,2-Dichloropropane	100	113		ug/Kg		113	70 - 130
2-Butanone (MEK)	1000	695	*	ug/Kg		69	70 - 130
2-Chlorotoluene	100	91.9		ug/Kg		92	70 - 130
2-Hexanone	1000	749		ug/Kg		75	70 - 130
4-Chlorotoluene	100	92.6		ug/Kg		93	70 - 130
4-Isopropyltoluene	100	92.6		ug/Kg		93	70 - 130
4-Methyl-2-pentanone (MIBK)	1000	857		ug/Kg		86	70 - 130
Acetone	1000	969		ug/Kg		97	70 - 130
Benzene	100	100		ug/Kg		100	70 - 130
Bromobenzene	100	88.6		ug/Kg		89	70 - 130
Bromoform	100	80.4		ug/Kg		80	70 - 130
Bromomethane	100	66.8	*	ug/Kg		67	70 - 130
Carbon disulfide	100	109		ug/Kg		109	70 - 130
Carbon tetrachloride	100	106		ug/Kg		106	70 - 130
Chlorobenzene	100	90.3		ug/Kg		90	70 - 130
Chlorobromomethane	100	94.6		ug/Kg		95	70 - 130
Chlorodibromomethane	100	93.4		ug/Kg		93	70 - 130
Chloroethane	100	65.1	*	ug/Kg		65	70 - 130
Chloroform	100	104		ug/Kg		104	70 - 130
Chloromethane	100	76.2		ug/Kg		76	70 - 130
cis-1,2-Dichloroethene	100	105		ug/Kg		105	70 - 130
cis-1,3-Dichloropropene	100	96.2		ug/Kg		96	70 - 130
Dibromomethane	100	96.6		ug/Kg		97	70 - 130
Dichlorobromomethane	100	93.5		ug/Kg		94	70 - 130
Dichlorodifluoromethane	100	65.2	*	ug/Kg		65	70 - 130
Ethyl ether	100	85.3		ug/Kg		85	70 - 130
Ethylbenzene	100	92.6		ug/Kg		93	70 - 130
Ethylene Dibromide	100	97.4		ug/Kg		97	70 - 130
Hexachlorobutadiene	100	83.4		ug/Kg		83	70 - 130
Isopropyl ether	100	111		ug/Kg		111	70 - 130
Isopropylbenzene	100	96.5		ug/Kg		96	70 - 130
m-Xylene & p-Xylene	200	187		ug/Kg		93	70 - 130
Methyl tert-butyl ether	100	125		ug/Kg		125	70 - 130
Methylene Chloride	100	108		ug/Kg		108	70 - 130
n-Butylbenzene	100	95.9		ug/Kg		96	70 - 130
N-Propylbenzene	100	94.3		ug/Kg		94	70 - 130
Naphthalene	100	96.8		ug/Kg		97	70 - 130
o-Xylene	100	94.8		ug/Kg		95	70 - 130
sec-Butylbenzene	100	92.9		ug/Kg		93	70 - 130
Styrene	100	94.2		ug/Kg		94	70 - 130
Tert-amyl methyl ether	100	95.9		ug/Kg		96	70 - 130
Tert-butyl ethyl ether	100	117		ug/Kg		117	70 - 130
tert-Butylbenzene	100	90.8		ug/Kg		91	70 - 130
Tetrachloroethene	100	98.6		ug/Kg		99	70 - 130
Tetrahydrofuran	1000	1020		ug/Kg		102	70 - 130
Toluene	100	103		ug/Kg		103	70 - 130

Method: 8260C - Volatile Organic Compounds (GC/MS) (Continued)

Lab Sample ID: LCS 360-96421/1-A — **Client Sample ID: Lab Control Sample**
Matrix: Solid — **Prep Type: Total/NA**
Analysis Batch: 96403 — **Prep Batch: 96421**

Analyte	Spike Added	LCS Result	LCS Qualifier	Unit	D	%Rec	%Rec. Limits
trans-1,2-Dichloroethene	100	117		ug/Kg		117	70 - 130
trans-1,3-Dichloropropene	100	101		ug/Kg		101	70 - 130
Trichloroethene	100	92.0		ug/Kg		92	70 - 130
Trichlorofluoromethane	100	76.9		ug/Kg		77	70 - 130
Vinyl chloride	100	73.0		ug/Kg		73	70 - 130

Surrogate	*LCS %Recovery*	*LCS Qualifier*	*Limits*
4-Bromofluorobenzene	*104*		*70 - 130*
Dibromofluoromethane	*99*		*70 - 130*
Toluene-d8 (Surr)	*106*		*70 - 130*

Lab Sample ID: LCSD 360-96421/2-A — **Client Sample ID: Lab Control Sample Dup**
Matrix: Solid — **Prep Type: Total/NA**
Analysis Batch: 96403 — **Prep Batch: 96421**

Analyte	Spike Added	LCSD Result	LCSD Qualifier	Unit	D	%Rec	%Rec. Limits	RPD	RPD Limit
1,1,1,2-Tetrachloroethane	100	86.9		ug/Kg		87	70 - 130	0	20
1,1,1-Trichloroethane	100	111		ug/Kg		111	70 - 130	2	20
1,1,2,2-Tetrachloroethane	100	85.8		ug/Kg		86	70 - 130	3	20
1,1,2-Trichloroethane	100	95.8		ug/Kg		96	70 - 130	1	20
1,1-Dichloroethane	100	123		ug/Kg		123	70 - 130	3	20
1,1-Dichloroethene	100	93.7		ug/Kg		94	70 - 130	5	20
1,1-Dichloropropene	100	105		ug/Kg		105	70 - 130	0	20
1,2,3-Trichlorobenzene	100	81.2		ug/Kg		81	70 - 130	8	20
1,2,3-Trichloropropane	100	88.0		ug/Kg		88	70 - 130	0	20
1,2,4-Trichlorobenzene	100	87.2		ug/Kg		87	70 - 130	6	20
1,2,4-Trimethylbenzene	100	94.4		ug/Kg		94	70 - 130	0	20
1,2-Dibromo-3-Chloropropane	100	92.3		ug/Kg		92	70 - 130	7	20
1,2-Dichlorobenzene	100	85.5		ug/Kg		86	70 - 130	4	20
1,2-Dichloroethane	100	96.0		ug/Kg		96	70 - 130	1	20
1,2-Dichloropropane	100	95.3		ug/Kg		95	70 - 130	0	20
1,3,5-Trimethylbenzene	100	93.4		ug/Kg		93	70 - 130	0	20
1,3-Dichlorobenzene	100	89.0		ug/Kg		89	70 - 130	0	20
1,3-Dichloropropane	100	101		ug/Kg		101	70 - 130	0	20
1,4-Dichlorobenzene	100	87.1		ug/Kg		87	70 - 130	1	20
1,4-Dioxane	1000	1230		ug/Kg		123	70 - 130	4	20
2,2-Dichloropropane	100	114		ug/Kg		114	70 - 130	1	20
2-Butanone (MEK)	1000	679	*	ug/Kg		68	70 - 130	2	20
2-Chlorotoluene	100	92.4		ug/Kg		92	70 - 130	1	20
2-Hexanone	1000	695		ug/Kg		70	70 - 130	7	20
4-Chlorotoluene	100	93.6		ug/Kg		94	70 - 130	1	20
4-Isopropyltoluene	100	92.3		ug/Kg		92	70 - 130	0	20
4-Methyl-2-pentanone (MIBK)	1000	843		ug/Kg		84	70 - 130	2	20
Acetone	1000	957		ug/Kg		96	70 - 130	1	20
Benzene	100	102		ug/Kg		102	70 - 130	2	20
Bromobenzene	100	87.8		ug/Kg		88	70 - 130	1	20
Bromoform	100	81.7		ug/Kg		82	70 - 130	2	20
Bromomethane	100	63.2	*	ug/Kg		63	70 - 130	5	20
Carbon disulfide	100	114		ug/Kg		114	70 - 130	5	20

Method: 8260C - Volatile Organic Compounds (GC/MS) (Continued)

Lab Sample ID: LCSD 360-96421/2-A
Matrix: Solid
Analysis Batch: 96403

Client Sample ID: Lab Control Sample Dup
Prep Type: Total/NA
Prep Batch: 96421

Analyte	Spike Added	LCSD Result	LCSD Qualifier	Unit	D	%Rec	%Rec. Limits	RPD	RPD Limit
Carbon tetrachloride	100	106		ug/Kg		106	70 - 130	1	20
Chlorobenzene	100	91.1		ug/Kg		91	70 - 130	1	20
Chlorobromomethane	100	95.5		ug/Kg		96	70 - 130	1	20
Chlorodibromomethane	100	94.2		ug/Kg		94	70 - 130	1	20
Chloroethane	100	65.8	*	ug/Kg		66	70 - 130	1	20
Chloroform	100	105		ug/Kg		105	70 - 130	2	20
Chloromethane	100	74.2		ug/Kg		74	70 - 130	3	20
cis-1,2-Dichloroethene	100	107		ug/Kg		107	70 - 130	2	20
cis-1,3-Dichloropropene	100	96.0		ug/Kg		96	70 - 130	0	20
Dibromomethane	100	98.2		ug/Kg		98	70 - 130	2	20
Dichlorobromomethane	100	95.0		ug/Kg		95	70 - 130	2	20
Dichlorodifluoromethane	100	65.9	*	ug/Kg		66	70 - 130	1	20
Ethyl ether	100	85.4		ug/Kg		85	70 - 130	0	20
Ethylbenzene	100	92.2		ug/Kg		92	70 - 130	0	20
Ethylene Dibromide	100	95.7		ug/Kg		96	70 - 130	2	20
Hexachlorobutadiene	100	79.2		ug/Kg		79	70 - 130	5	20
Isopropyl ether	100	112		ug/Kg		112	70 - 130	1	20
Isopropylbenzene	100	96.3		ug/Kg		96	70 - 130	0	20
m-Xylene & p-Xylene	200	188		ug/Kg		94	70 - 130	1	20
Methyl tert-butyl ether	100	126		ug/Kg		126	70 - 130	0	20
Methylene Chloride	100	105		ug/Kg		105	70 - 130	3	20
n-Butylbenzene	100	93.5		ug/Kg		94	70 - 130	3	20
N-Propylbenzene	100	95.3		ug/Kg		95	70 - 130	1	20
Naphthalene	100	90.7		ug/Kg		91	70 - 130	7	20
o-Xylene	100	95.4		ug/Kg		95	70 - 130	1	20
sec-Butylbenzene	100	94.6		ug/Kg		95	70 - 130	2	20
Styrene	100	94.2		ug/Kg		94	70 - 130	0	20
Tert-amyl methyl ether	100	96.7		ug/Kg		97	70 - 130	1	20
Tert-butyl ethyl ether	100	117		ug/Kg		117	70 - 130	0	20
tert-Butylbenzene	100	90.3		ug/Kg		90	70 - 130	1	20
Tetrachloroethene	100	98.9		ug/Kg		99	70 - 130	0	20
Tetrahydrofuran	1000	1000		ug/Kg		100	70 - 130	2	20
Toluene	100	103		ug/Kg		103	70 - 130	0	20
trans-1,2-Dichloroethene	100	119		ug/Kg		119	70 - 130	2	20
trans-1,3-Dichloropropene	100	101		ug/Kg		101	70 - 130	0	20
Trichloroethene	100	93.8		ug/Kg		94	70 - 130	2	20
Trichlorofluoromethane	100	75.1		ug/Kg		75	70 - 130	2	20
Vinyl chloride	100	71.1		ug/Kg		71	70 - 130	3	20

Surrogate	*LCSD %Recovery*	*LCSD Qualifier*	*Limits*
4-Bromofluorobenzene	*103*		*70 - 130*
Dibromofluoromethane	*100*		*70 - 130*
Toluene-d8 (Surr)	*106*		*70 - 130*

Lab Chronicle

Client: ERM-Northeast
Project/Site: IDS Wayland

TestAmerica Job ID: 360-43153-1

Client Sample ID: S-1-20121004-01

Lab Sample ID: 360-43153-1

Date Collected: 10/04/12 09:30
Matrix: Solid
Date Received: 10/05/12 19:50
Percent Solids: 89.0

Prep Type	Batch Type	Batch Method	Run	Dilution Factor	Batch Number	Prepared or Analyzed	Analyst	Lab
Total/NA	Prep	5035			96421	10/09/12 11:21	CMR	TAL WFD
Total/NA	Analysis	8260C		1	96403	10/09/12 16:32	CMR	TAL WFD
Total/NA	Analysis	Moisture		1	96445	10/09/12 17:10	BH	TAL WFD

Client Sample ID: S-2-20121004-01

Lab Sample ID: 360-43153-2

Date Collected: 10/04/12 09:45
Matrix: Solid
Date Received: 10/05/12 19:50
Percent Solids: 85.2

Prep Type	Batch Type	Batch Method	Run	Dilution Factor	Batch Number	Prepared or Analyzed	Analyst	Lab
Total/NA	Prep	5035			96421	10/09/12 11:21	CMR	TAL WFD
Total/NA	Analysis	8260C		1	96403	10/09/12 15:46	CMR	TAL WFD
Total/NA	Analysis	Moisture		1	96445	10/09/12 17:10	BH	TAL WFD

Client Sample ID: S-3-20121004-01

Lab Sample ID: 360-43153-3

Date Collected: 10/04/12 10:00
Matrix: Solid
Date Received: 10/05/12 19:50
Percent Solids: 82.2

Prep Type	Batch Type	Batch Method	Run	Dilution Factor	Batch Number	Prepared or Analyzed	Analyst	Lab
Total/NA	Prep	5035			96421	10/09/12 11:21	CMR	TAL WFD
Total/NA	Analysis	8260C		1	96403	10/09/12 16:09	CMR	TAL WFD
Total/NA	Prep	5035			96421	10/09/12 16:30	CMR	TAL WFD
Total/NA	Analysis	8260C		1	96403	10/09/12 17:40	CMR	TAL WFD
Total/NA	Analysis	Moisture		1	96445	10/09/12 17:10	BH	TAL WFD

Laboratory References:

TAL WFD = TestAmerica Westfield, Westfield Executive Park, 53 Southampton Road, Westfield, MA 01085, TEL (413)572-4000

Certification Summary

Client: ERM-Northeast
Project/Site: IDS Wayland

TestAmerica Job ID: 360-43153-1

Laboratory: TestAmerica Westfield

All certifications held by this laboratory are listed. Not all certifications are applicable to this report.

Authority	Program	EPA Region	Certification ID	Expiration Date
Connecticut	State Program	1	PH-0494	09-30-12
Maine	State Program	1	MA00014	05-03-13
Massachusetts	State Program	1	M-MA014	06-30-13
New Hampshire	NELAC	1	2539	08-08-13
Rhode Island	State Program	1	LAO00057	12-30-12
Vermont	State Program	1	VT-10843	11-18-12

State Accreditation Matrix

Method Name	Description	Primary Accreditation	
		New Hampshire (NELAC)	Mass
180.1	Turbidity, Nephelometric	P	P
245.1	Mercury (CVAA)	NP/P	NP
300	Anions, Ion Chromatography	NP/P	NP/P
410.4	COD	NP	NP
524.2	Volatile Org Comp (GC/MS)(list upon request)	P	P
524.2	Trihalomethane compounds	P	P
608	Organochlorine Pest/PCBs (list upon request)	NP	NP
624	Volatile Org Comp (GC/MS)(list upon request)	NP	NP
625	Semivolatile Org Comp (GC/MS)(list upon request)	NP	NP
1010	Ignitability, Pensky-Martens Closed-Cup Method	SW	
1103.1	E.coli		ambient/source
3546	Microwave Extraction	SW	
5035	Closed System Purge and Trap	SW	
6020	Metals (ICP/MS) (list upon request)	NP	
10-107-06-2	Nitrogen, Total Kjeldahl	NP	NP
200.7 Rev 4.4	Metals (ICP)(list upon request)	NP/P	NP/P
200.8 Rev 5.4	Metals (ICP/MS) (list upon request)	NP/P	NP/P
3005A	Preparation, Total Recoverable or Dissolved Metals	NP/P	
3010A	Preparation, Total Metals	NP/P	
3020A	Preparation, Total Metals	NP/P	
3050B	Preparation, Metals	SW	
3510C	Liquid-Liquid Extraction (Separatory Funnel)	NP	
5030B	Purge and Trap	NP	
6010C	Metals (ICP)(list upon request)	NP/SW	
7196A	Chromium, Hexavalent	NP/SW	
7470A	Mercury (CVAA)	NP	
7471A	Mercury (CVAA)	SW	
8081B	Organochlorine Pesticides (GC)(list upon request)	NP/SW	
8082A	PCBs by Gas Chromatography(list upon request)	NP/SW	
8260C	Volatile Org Comp. (GC/MS)(list upon request)	NP/SW	
8270D	Semivolatile Comp.(GC/MS)(list upon request)	NP/SW	
9012A	Cyanide, Total and/or Amenable	NP/SW	
9030B	Sulfide, Distillation (Acid Soluble and Insoluble)	NP	
9045C	pH	SW	
CT ETPH	Conn - Ext. Total petroleum Hydrocarbons (GC)	NP/SW	
Enterolert	Enterococcus		ambient/source
L107041C	Nitrogen, Nitrate	NP	
L107-06-1B	Nitrogen Ammonia	NP	NP
L204001A CN	Cyanide, Total	P	NP/P
L210-001A	Phenolics, Total Recoverable	NP	NP
MA-EPH	Mass - Extractable Petroleum Hydrocarbons (GC)	NP/SW	
MAVPH	Mass - Volatile Petroleum Hydrocarbons (GC)	NP/SW	
SM 2320B	Alkalinity	NP/P	NP/P
SM 2340B	Total Hardness (as CaCO3) by calculation	NP/P	NP
SM 2510B	Conductivity, Specific Conductance	NP/P	NP/P
SM 2540C	Solids, Total Dissolved (TDS)	NP/P	NP/P
SM 2540D	Solids, Total Suspended (TSS)	NP	NP
SM 3500 CR D	Chromium, Hexavalent	NP	
SM 4500 Cl F	Chlorine, Residual		NP
SM 4500 H+ B	pH	NP/P	NP/P
SM 4500 NO2 B	Nitrogen, Nitrite	NP	P
SM 4500 P E	Phosphorus, Orthophosphate	NP/P	NP
SM 4500 P E	Phosphorus, Total	NP	NP
SM 4500 S2 D	Sulfide, Total	NP	
SM 5210B	BOD, 5-Day	NP	NP
SM 5310B	Organic Carbon, Total (TOC)	NP/P	NP
SM 9215E	Heterotrophic Plate Count (SimPlate)		P
SM 9222D	Coliforms, Fecal (Membrane Filter)		NP
SM 9223	Coliforms, Total, and E.Coli (Colilert-P/A)		P
SM 9223	Coliforms, Total, and E.Coli (Enumeration)		P

Not all organic compounds are accreditied under YNI
For methods with multiple compounds all compounds may not meet TNI criteria, a listing should be obtained from the laboratory

The lab carries additional accreditations with several states. This is the laboratories typcial listing but is subject to change based on the laboratories current certification standing.

Login Sample Receipt Checklist

Client: ERM-Northeast

Job Number: 360-43153-1

Login Number: 43153
List Number: 1
Creator: Kolb, Chris M

List Source: TestAmerica Westfield

Question	Answer	Comment
Radioactivity wasn't checked or is </= background as measured by a survey meter.	N/A	
The cooler's custody seal, if present, is intact.	True	
Sample custody seals, if present, are intact.	True	
The cooler or samples do not appear to have been compromised or tampered with.	True	
Samples were received on ice.	True	
Cooler Temperature is acceptable.	False	Cooler temperature outside required temperature criteria.
Cooler Temperature is recorded.	True	
COC is present.	True	
COC is filled out in ink and legible.	True	
COC is filled out with all pertinent information.	True	
Is the Field Sampler's name present on COC?	True	
There are no discrepancies between the containers received and the COC.	True	
Samples are received within Holding Time.	True	
Sample containers have legible labels.	True	
Containers are not broken or leaking.	True	
Sample collection date/times are provided.	True	
Appropriate sample containers are used.	True	
Sample bottles are completely filled.	True	
Sample Preservation Verified.	True	
There is sufficient vol. for all requested analyses, incl. any requested MS/MSDs	True	
Containers requiring zero headspace have no headspace or bubble is <6mm (1/4").	True	
Multiphasic samples are not present.	True	
Samples do not require splitting or compositing.	True	
Residual Chlorine Checked.	N/A	

Chain of Custody Record

TestAmerica
THE LEADER IN ENVIRONMENTAL TESTING

Client Information	Sampler: Chris Corri	Lab PM:	Carrier Tracking No(s):	COC No: 360-16286-6416.2
Client Contact: ~~Mr. Ethan Gyles~~ Jason Flattery	Phone: 617-519-3419	E-Mail:		Page: Page 2 of 2
Company: ERM-Northeast				Job #: 3606-43153
Address: ~~15 Park Row West,~~ 1 Beacon St 5th Floor	Due Date Requested: Standard			
City: ~~Providence~~ Boston Ma	TAT Requested (days):			
State, Zip: ~~RI, 02903~~				
Phone:	PO #:			
Email: ethan.gyles@erm.com Jason.Flattery@erm.com	WO #:			
Project Name: IDS	Project #: 0167058			
Site: Wayland Ma	SSOW#:			

Analysis Requested

Sample Identification	Sample Date	Sample Time	Sample Type (C=comp, G=grab)	Matrix (W=water, S=solid, O=waste/oil, BT=Tissue, A=Air)	Field Filtered Sample (Yes or No)	Perform MS/MSD (Yes or No)	~~8260C~~ (C) mcp list	8260C - mcp list	8260 mcp list	8260 mcp list	Total Number of containers	Special Instructions/Note:
			Preservation Code:				A	N	G	F		
S-1-20121004-01	10/4/12	(C) 0930	G	~~Water~~ Soil				1	2	1	4	
S-2-20121004-01	↓	0945	↓	↓				1	2	1	4	
S-3-20121004-01	↓	↓ 1000	↓	↓				1	2	1	4	
(C)												

Preservation Codes:

A - HCL	M - Hexane
B - NaOH	N - None
C - Zn Acetate	O - AsNaO2
D - Nitric Acid	P - Na2O4S
E - NaHSO4	Q - Na2SO3
F - MeOH	R - Na2S2SO3
G - Amchlor	S - H2SO4
H - Ascorbic Acid	T - TSP Dodecahydrate
I - Ice	U - Acetone
J - DI Water	V - MCAA
K - EDTA	W - ph 4-5
L - EDA	Z - other (specify)

Other:

Possible Hazard Identification
☐ Non-Hazard ☐ Flammable ☐ Skin Irritant ☐ Poison B ☐ Unknown ☐ Radiological

Sample Disposal (A fee may be assessed if samples are retained longer than 1 month)
☐ Return To Client ☐ Disposal By Lab ☐ Archive For _____ Months

Deliverable Requested: I, II, III, IV, Other (specify)

Special Instructions/QC Requirements:

Empty Kit Relinquished by:	Date:	Time:	Method of Shipment:

	Date/Time	Company		Date/Time	Company
Relinquished by:	10/5/12 0700	ERM	Received by:	10/5/12 10:07	TAL
Relinquished by:	10/5/12 1700	TAL	Received by:	10/5/12 1700	
Relinquished by:	10/5/12 1950		Received by:	10/5/12 1950	TA

Custody Seals Intact: Δ Yes Δ No

Custody Seal No.:

Cooler Temperature(s) °C and Other Remarks: 11.4 DCE

TestAmerica

THE LEADER IN ENVIRONMENTAL TESTING

ANALYTICAL REPORT

TestAmerica Laboratories, Inc.
TestAmerica Westfield
Westfield Executive Park
53 Southampton Road
Westfield, MA 01085
Tel: (413)572-4000

TestAmerica Job ID: 360-43154-1
Client Project/Site: IDS Wayland

For:
ERM-Northeast
One Beacon Steet
5th Floor
Boston, Massachusetts 02108

Attn: Jason Flattery

Authorized for release by:
10/16/2012 3:56:27 PM
Joe Chimi
Report Production Representative
joe.chimi@testamericainc.com

Designee for

Becky Mason
Project Manager II
becky.mason@testamericainc.com

LINKS

Review your project results through TotalAccess

Have a Question? Ask The Expert

Visit us at: www.testamericainc.com

The test results in this report meet all 2003 NELAC and 2009 TNI requirements for accredited parameters, exceptions are noted in this report. This report may not be reproduced except in full, and with written approval from the laboratory. For questions please contact the Project Manager at the e-mail address or telephone number listed on this page.

This report has been electronically signed and authorized by the signatory. Electronic signature is intended to be the legally binding equivalent of a traditionally handwritten signature.

Results relate only to the items tested and the sample(s) as received by the laboratory.

Table of Contents

Cover Page 1
Table of Contents 2
Case Narrative 3
Detection Summary 5
Method Summary 6
Sample Summary 7
Client Sample Results 8
Definitions 21
QC Association 22
Surrogate Summary 23
QC Sample Results 24
Chronicle 29
Certification Summary 31
Receipt Checklists 33
Chain of Custody 34

MassDEP Analytical Protocol Certification Form

Laboratory Name:	**TestAmerica Westfield**	Project #:	**360-43154-1**
Project Location:	**IDS Wayland**	RTN:	

This form provides certifications for the following data set: list Laboratory Sample ID Number(s):

360-43154-(1-8)

Matrices: [X] Groundwater/Surface Water [ ] Soil/Sediment [ ] Drinking Water [ ] Air [ ] Other:

CAM Protocols (check all that apply below):

8260 VOC CAM II A [X]	7470/7471 Hg CAM III B [ ]	Mass DEP VPH CAM IV A [ ]	8081 Pesticides CAM V B [ ]	7196 Hex Cr CAM VI B [ ]	Mass DEP APH CAM IX A [ ]
8270 SVOC CAM II B [ ]	7010 Metals CAM III C [ ]	Mass DEP EPH CAM IV B [ ]	8151 Herbicides CAM V C [ ]	8330 Explosives CAM VIII A [ ]	TO-15 VOC CAM IX B [ ]
6010 Metals CAM III A [ ]	6020 Metals CAM III D [ ]	8082 PCB CAM V A [ ]	9014 Total Cyanide/PAC CAM VI A [ ]	6860 Perchlorate CAM VIII B [ ]	

Affirmative Responses to Questions A through F are required for "Presumptive Certainty" status

A	Were all samples received in a condition consistent with those described on the Chain-of-Custody, properly preserved (including temperature) in the field or laboratory, and prepared/analyzed within method holding time.	[X] Yes [ ] No
B	Were the analytical method(s) and all associated QC requirements specified in the selected CAM protocol(s) followed?	[X] Yes [ ] No
C	Were all required corrective actions and analytical response actions specified in the selected CAM protocol(s) implemented for all identified performance standard non-conformances?	[X] Yes [ ] No
D	Does the laboratory report comply with all the reporting requirements specified in CAM VII A, "Quality Assurance and Quality Control Guidelines for the Acquisition and Reporting of Analytical Data"?	[X] Yes [ ] No
E	a. VPH, EPH and APH Methods only: Was each method conducted without significant modification(s)? (Refer to the individual method(s) for a list of significant modifications). b. APH and TO-15 Methods only: Was the complete analyte list reported for each method?	[ ] Yes [ ] No [ ] Yes [ ] No
F	Were all applicable CAM protocol QC and performance standard non-conformances identified and evaluated in a laboratory narrative (including all "No" responses to Questions A through E)?	[X] Yes [ ] No

Responses to Questions G, H and I below are required for "Presumptive Certainty" status

G	Were the reporting limits at or below all CAM reporting limits specified in the selected CAM protocol(s)?	[ ] Yes [X] No[1]

Data User Note: ***Data that achieve "Presumptive Certainty" status may not necessarily meet the data usability and representativeness requirements described in 310 CMR 40. 1056 (2)(k) and WCS-07-350***

H	Were **all** QC performance standards specified in the CAM protocol(s) achieved?	[ ] Yes [X] No[1]
I	Were results reported for the complete analyte list specified in the selected CAM protocol(s) ?	[X] Yes [ ] No[1]

[1] All negative responses must be addressed in an attached laboratory narrative.

I, the undersigned, attest under the pains and penalties of perjury that, based upon my personal inquiry of those responsible for obtaining the information, the material contained in this analytical report is, to the best of my knowledge and belief, is accurate and complete.

Signature:		Position:	Laboratory Director
Printed Name:	Steven C. Hartmann	Date:	10/16/12 15:50

This form has been electronically signed and approved

Job ID: 360-43154-1

Laboratory: TestAmerica Westfield

Narrative

With the exceptions noted as flags or footnotes, standard analytical protocols were followed in the analysis of the samples and no problems were encountered or anomalies observed. In addition all laboratory quality control samples were within established control limits, with any exceptions noted below. Each sample was analyzed to achieve the lowest possible reporting limit within the constraints of the method. In some cases, due to interference or analytes present at high concentrations, samples were diluted. For diluted samples, the reporting limits are adjusted relative to the dilution required.

Calculations are performed before rounding to avoid round-off errors in calculated results.

All holding times were met and proper preservation noted for the methods performed on these samples, unless otherwise detailed in the individual sections below.

RECEIPT

The samples were received on 10/05/2012; the samples arrived in good condition, properly preserved and on ice. The temperature of the coolers at receipt was 11.4 C.

TestAmerica's Reporting Limits (RLs) for this report may not always meet client specified method reporting limits due to various reasons such as methodology, dilutions, matrix or moisture content (soils). TestAmerica's pivot table EDD documents which compound(s) exceed certain regulatory standards. If not included with your deliverables, please contact your Project Manager about the availability of this EDD for your report.

VOLATILE ORGANIC COMPOUNDS (GC-MS)

Samples Drum-1-20121004-01 (360-43154-1), Drum-2-20121004-01 (360-43154-2), Drum-3-20121004-01 (360-43154-3), Drum-4-20121004-01 (360-43154-4), Drum-5-20121004-01 (360-43154-5), Drum-6-20121004-01 (360-43154-6), Dup-001-20121004-01 (360-43154-7) and Tripblank (360-43154-8) were analyzed for volatile organic compounds (GC-MS) in accordance with SW846 8260C. The samples were analyzed on 10/16/2012.

1,4-Dioxane failed the recovery criteria high for LCS 360-96638/3 and LCSD 360-96638/4. Refer to the QC report for details.

The calibration curve used quadratic regression for Hexachlorobutadiene as allowed by the method.

Sample Drum-5-20121004-01 (360-43154-5)[2X] required dilution prior to analysis due to sediment in the bottom of the containers. The reporting limits have been adjusted accordingly.

No other difficulties were encountered during the volatile organic compounds (GC-MS) analyses.

All other quality control parameters were within the acceptance limits.

Detection Summary

Client: ERM-Northeast
Project/Site: IDS Wayland

TestAmerica Job ID: 360-43154-1

Client Sample ID: Drum-1-20121004-01 — Lab Sample ID: 360-43154-1

Analyte	Result	Qualifier	RL	MDL	Unit	Dil Fac	D	Method	Prep Type
Methyl tert-butyl ether	1.4		1.0		ug/L	1		8260C	Total/NA

Client Sample ID: Drum-2-20121004-01 — Lab Sample ID: 360-43154-2

No Detections

Client Sample ID: Drum-3-20121004-01 — Lab Sample ID: 360-43154-3

Analyte	Result	Qualifier	RL	MDL	Unit	Dil Fac	D	Method	Prep Type
Acetone	55		50		ug/L	1		8260C	Total/NA

Client Sample ID: Drum-4-20121004-01 — Lab Sample ID: 360-43154-4

No Detections

Client Sample ID: Drum-5-20121004-01 — Lab Sample ID: 360-43154-5

No Detections

Client Sample ID: Drum-6-20121004-01 — Lab Sample ID: 360-43154-6

Analyte	Result	Qualifier	RL	MDL	Unit	Dil Fac	D	Method	Prep Type
Trichloroethene	1.6		1.0		ug/L	1		8260C	Total/NA

Client Sample ID: Dup-001-20121004-01 — Lab Sample ID: 360-43154-7

No Detections

Client Sample ID: Tripblank — Lab Sample ID: 360-43154-8

No Detections

Method Summary

Client: ERM-Northeast
Project/Site: IDS Wayland

TestAmerica Job ID: 360-43154-1

Method	Method Description	Protocol	Laboratory
8260C	Volatile Organic Compounds (GC/MS)	MA DEP	TAL WFD

Protocol References:

MA DEP = Massachusetts Department Of Environmental Protection

Laboratory References:

TAL WFD = TestAmerica Westfield, Westfield Executive Park, 53 Southampton Road, Westfield, MA 01085, TEL (413)572-4000

Sample Summary

Client: ERM-Northeast
Project/Site: IDS Wayland

TestAmerica Job ID: 360-43154-1

Lab Sample ID	Client Sample ID	Matrix	Collected	Received
360-43154-1	Drum-1-20121004-01	Water	10/04/12 08:00	10/05/12 19:50
360-43154-2	Drum-2-20121004-01	Water	10/04/12 08:15	10/05/12 19:50
360-43154-3	Drum-3-20121004-01	Water	10/04/12 08:30	10/05/12 19:50
360-43154-4	Drum-4-20121004-01	Water	10/04/12 08:45	10/05/12 19:50
360-43154-5	Drum-5-20121004-01	Water	10/04/12 09:00	10/05/12 19:50
360-43154-6	Drum-6-20121004-01	Water	10/04/12 09:15	10/05/12 19:50
360-43154-7	Dup-001-20121004-01	Water	10/04/12 12:00	10/05/12 19:50
360-43154-8	Tripblank	Water	10/04/12 08:00	10/05/12 19:50

Method: 8260C - Volatile Organic Compounds (GC/MS)

Client Sample ID: Drum-1-20121004-01
Date Collected: 10/04/12 08:00
Date Received: 10/05/12 19:50

Lab Sample ID: 360-43154-1
Matrix: Water

Analyte	Result	Qualifier	RL	MDL	Unit	D	Prepared	Analyzed	Dil Fac
1,1,1,2-Tetrachloroethane	ND		1.0		ug/L			10/16/12 09:50	1
1,1,1-Trichloroethane	ND		1.0		ug/L			10/16/12 09:50	1
1,1,2,2-Tetrachloroethane	ND		0.50		ug/L			10/16/12 09:50	1
1,1,2-Trichloroethane	ND		1.0		ug/L			10/16/12 09:50	1
1,1-Dichloroethane	ND		1.0		ug/L			10/16/12 09:50	1
1,1-Dichloroethene	ND		1.0		ug/L			10/16/12 09:50	1
1,1-Dichloropropene	ND		1.0		ug/L			10/16/12 09:50	1
1,2,3-Trichlorobenzene	ND		1.0		ug/L			10/16/12 09:50	1
1,2,3-Trichloropropane	ND		1.0		ug/L			10/16/12 09:50	1
1,2,4-Trichlorobenzene	ND		1.0		ug/L			10/16/12 09:50	1
1,2,4-Trimethylbenzene	ND		1.0		ug/L			10/16/12 09:50	1
1,2-Dibromo-3-Chloropropane	ND		5.0		ug/L			10/16/12 09:50	1
1,2-Dichlorobenzene	ND		1.0		ug/L			10/16/12 09:50	1
1,2-Dichloroethane	ND		1.0		ug/L			10/16/12 09:50	1
1,2-Dichloropropane	ND		1.0		ug/L			10/16/12 09:50	1
1,3,5-Trimethylbenzene	ND		1.0		ug/L			10/16/12 09:50	1
1,3-Dichlorobenzene	ND		1.0		ug/L			10/16/12 09:50	1
1,3-Dichloropropane	ND		1.0		ug/L			10/16/12 09:50	1
1,4-Dichlorobenzene	ND		1.0		ug/L			10/16/12 09:50	1
1,4-Dioxane	ND	*	50		ug/L			10/16/12 09:50	1
2,2-Dichloropropane	ND		1.0		ug/L			10/16/12 09:50	1
2-Butanone (MEK)	ND		10		ug/L			10/16/12 09:50	1
2-Chlorotoluene	ND		1.0		ug/L			10/16/12 09:50	1
2-Hexanone	ND		10		ug/L			10/16/12 09:50	1
4-Chlorotoluene	ND		1.0		ug/L			10/16/12 09:50	1
4-Isopropyltoluene	ND		1.0		ug/L			10/16/12 09:50	1
4-Methyl-2-pentanone (MIBK)	ND		10		ug/L			10/16/12 09:50	1
Acetone	ND		50		ug/L			10/16/12 09:50	1
Benzene	ND		1.0		ug/L			10/16/12 09:50	1
Bromobenzene	ND		1.0		ug/L			10/16/12 09:50	1
Bromoform	ND		1.0		ug/L			10/16/12 09:50	1
Bromomethane	ND		2.0		ug/L			10/16/12 09:50	1
Carbon disulfide	ND		10		ug/L			10/16/12 09:50	1
Carbon tetrachloride	ND		1.0		ug/L			10/16/12 09:50	1
Chlorobenzene	ND		1.0		ug/L			10/16/12 09:50	1
Chlorobromomethane	ND		1.0		ug/L			10/16/12 09:50	1
Chlorodibromomethane	ND		0.50		ug/L			10/16/12 09:50	1
Chloroethane	ND		2.0		ug/L			10/16/12 09:50	1
Chloroform	ND		1.0		ug/L			10/16/12 09:50	1
Chloromethane	ND		2.0		ug/L			10/16/12 09:50	1
cis-1,2-Dichloroethene	ND		1.0		ug/L			10/16/12 09:50	1
cis-1,3-Dichloropropene	ND		0.40		ug/L			10/16/12 09:50	1
Dibromomethane	ND		1.0		ug/L			10/16/12 09:50	1
Dichlorobromomethane	ND		0.50		ug/L			10/16/12 09:50	1
Dichlorodifluoromethane	ND		1.0		ug/L			10/16/12 09:50	1
Ethyl ether	ND		1.0		ug/L			10/16/12 09:50	1
Ethylbenzene	ND		1.0		ug/L			10/16/12 09:50	1
Ethylene Dibromide	ND		1.0		ug/L			10/16/12 09:50	1
Hexachlorobutadiene	ND		0.40		ug/L			10/16/12 09:50	1
Isopropyl ether	ND		10		ug/L			10/16/12 09:50	1
Isopropylbenzene	ND		1.0		ug/L			10/16/12 09:50	1

Method: 8260C - Volatile Organic Compounds (GC/MS) (Continued)

Client Sample ID: Drum-1-20121004-01 **Lab Sample ID: 360-43154-1**
Date Collected: 10/04/12 08:00 **Matrix: Water**
Date Received: 10/05/12 19:50

Analyte	Result	Qualifier	RL	MDL	Unit	D	Prepared	Analyzed	Dil Fac
m-Xylene & p-Xylene	ND		2.0		ug/L			10/16/12 09:50	1
Methyl tert-butyl ether	**1.4**		1.0		ug/L			10/16/12 09:50	1
Methylene Chloride	ND		2.0		ug/L			10/16/12 09:50	1
n-Butylbenzene	ND		1.0		ug/L			10/16/12 09:50	1
N-Propylbenzene	ND		1.0		ug/L			10/16/12 09:50	1
Naphthalene	ND		5.0		ug/L			10/16/12 09:50	1
o-Xylene	ND		1.0		ug/L			10/16/12 09:50	1
sec-Butylbenzene	ND		1.0		ug/L			10/16/12 09:50	1
Styrene	ND		1.0		ug/L			10/16/12 09:50	1
Tert-amyl methyl ether	ND		5.0		ug/L			10/16/12 09:50	1
Tert-butyl ethyl ether	ND		5.0		ug/L			10/16/12 09:50	1
tert-Butylbenzene	ND		1.0		ug/L			10/16/12 09:50	1
Tetrachloroethene	ND		1.0		ug/L			10/16/12 09:50	1
Tetrahydrofuran	ND		10		ug/L			10/16/12 09:50	1
Toluene	ND		1.0		ug/L			10/16/12 09:50	1
trans-1,2-Dichloroethene	ND		1.0		ug/L			10/16/12 09:50	1
trans-1,3-Dichloropropene	ND		0.40		ug/L			10/16/12 09:50	1
Trichloroethene	ND		1.0		ug/L			10/16/12 09:50	1
Trichlorofluoromethane	ND		1.0		ug/L			10/16/12 09:50	1
Vinyl chloride	ND		0.50		ug/L			10/16/12 09:50	1

Surrogate	*%Recovery*	*Qualifier*	*Limits*	*Prepared*	*Analyzed*	*Dil Fac*
4-Bromofluorobenzene	*100*		*70 - 130*		*10/16/12 09:50*	*1*
Dibromofluoromethane	*104*		*70 - 130*		*10/16/12 09:50*	*1*
Toluene-d8 (Surr)	*100*		*70 - 130*		*10/16/12 09:50*	*1*

Client Sample ID: Drum-2-20121004-01 **Lab Sample ID: 360-43154-2**
Date Collected: 10/04/12 08:15 **Matrix: Water**
Date Received: 10/05/12 19:50

Analyte	Result	Qualifier	RL	MDL	Unit	D	Prepared	Analyzed	Dil Fac
1,1,1,2-Tetrachloroethane	ND		1.0		ug/L			10/16/12 10:12	1
1,1,1-Trichloroethane	ND		1.0		ug/L			10/16/12 10:12	1
1,1,2,2-Tetrachloroethane	ND		0.50		ug/L			10/16/12 10:12	1
1,1,2-Trichloroethane	ND		1.0		ug/L			10/16/12 10:12	1
1,1-Dichloroethane	ND		1.0		ug/L			10/16/12 10:12	1
1,1-Dichloroethene	ND		1.0		ug/L			10/16/12 10:12	1
1,1-Dichloropropene	ND		1.0		ug/L			10/16/12 10:12	1
1,2,3-Trichlorobenzene	ND		1.0		ug/L			10/16/12 10:12	1
1,2,3-Trichloropropane	ND		1.0		ug/L			10/16/12 10:12	1
1,2,4-Trichlorobenzene	ND		1.0		ug/L			10/16/12 10:12	1
1,2,4-Trimethylbenzene	ND		1.0		ug/L			10/16/12 10:12	1
1,2-Dibromo-3-Chloropropane	ND		5.0		ug/L			10/16/12 10:12	1
1,2-Dichlorobenzene	ND		1.0		ug/L			10/16/12 10:12	1
1,2-Dichloroethane	ND		1.0		ug/L			10/16/12 10:12	1
1,2-Dichloropropane	ND		1.0		ug/L			10/16/12 10:12	1
1,3,5-Trimethylbenzene	ND		1.0		ug/L			10/16/12 10:12	1
1,3-Dichlorobenzene	ND		1.0		ug/L			10/16/12 10:12	1
1,3-Dichloropropane	ND		1.0		ug/L			10/16/12 10:12	1
1,4-Dichlorobenzene	ND		1.0		ug/L			10/16/12 10:12	1
1,4-Dioxane	ND	*	50		ug/L			10/16/12 10:12	1
2,2-Dichloropropane	ND		1.0		ug/L			10/16/12 10:12	1

Method: 8260C - Volatile Organic Compounds (GC/MS) (Continued)

Client Sample ID: Drum-2-20121004-01
Date Collected: 10/04/12 08:15
Date Received: 10/05/12 19:50

Lab Sample ID: 360-43154-2
Matrix: Water

Analyte	Result	Qualifier	RL	MDL	Unit	D	Prepared	Analyzed	Dil Fac
2-Butanone (MEK)	ND		10		ug/L			10/16/12 10:12	1
2-Chlorotoluene	ND		1.0		ug/L			10/16/12 10:12	1
2-Hexanone	ND		10		ug/L			10/16/12 10:12	1
4-Chlorotoluene	ND		1.0		ug/L			10/16/12 10:12	1
4-Isopropyltoluene	ND		1.0		ug/L			10/16/12 10:12	1
4-Methyl-2-pentanone (MIBK)	ND		10		ug/L			10/16/12 10:12	1
Acetone	ND		50		ug/L			10/16/12 10:12	1
Benzene	ND		1.0		ug/L			10/16/12 10:12	1
Bromobenzene	ND		1.0		ug/L			10/16/12 10:12	1
Bromoform	ND		1.0		ug/L			10/16/12 10:12	1
Bromomethane	ND		2.0		ug/L			10/16/12 10:12	1
Carbon disulfide	ND		10		ug/L			10/16/12 10:12	1
Carbon tetrachloride	ND		1.0		ug/L			10/16/12 10:12	1
Chlorobenzene	ND		1.0		ug/L			10/16/12 10:12	1
Chlorobromomethane	ND		1.0		ug/L			10/16/12 10:12	1
Chlorodibromomethane	ND		0.50		ug/L			10/16/12 10:12	1
Chloroethane	ND		2.0		ug/L			10/16/12 10:12	1
Chloroform	ND		1.0		ug/L			10/16/12 10:12	1
Chloromethane	ND		2.0		ug/L			10/16/12 10:12	1
cis-1,2-Dichloroethene	ND		1.0		ug/L			10/16/12 10:12	1
cis-1,3-Dichloropropene	ND		0.40		ug/L			10/16/12 10:12	1
Dibromomethane	ND		1.0		ug/L			10/16/12 10:12	1
Dichlorobromomethane	ND		0.50		ug/L			10/16/12 10:12	1
Dichlorodifluoromethane	ND		1.0		ug/L			10/16/12 10:12	1
Ethyl ether	ND		1.0		ug/L			10/16/12 10:12	1
Ethylbenzene	ND		1.0		ug/L			10/16/12 10:12	1
Ethylene Dibromide	ND		1.0		ug/L			10/16/12 10:12	1
Hexachlorobutadiene	ND		0.40		ug/L			10/16/12 10:12	1
Isopropyl ether	ND		10		ug/L			10/16/12 10:12	1
Isopropylbenzene	ND		1.0		ug/L			10/16/12 10:12	1
m-Xylene & p-Xylene	ND		2.0		ug/L			10/16/12 10:12	1
Methyl tert-butyl ether	ND		1.0		ug/L			10/16/12 10:12	1
Methylene Chloride	ND		2.0		ug/L			10/16/12 10:12	1
n-Butylbenzene	ND		1.0		ug/L			10/16/12 10:12	1
N-Propylbenzene	ND		1.0		ug/L			10/16/12 10:12	1
Naphthalene	ND		5.0		ug/L			10/16/12 10:12	1
o-Xylene	ND		1.0		ug/L			10/16/12 10:12	1
sec-Butylbenzene	ND		1.0		ug/L			10/16/12 10:12	1
Styrene	ND		1.0		ug/L			10/16/12 10:12	1
Tert-amyl methyl ether	ND		5.0		ug/L			10/16/12 10:12	1
Tert-butyl ethyl ether	ND		5.0		ug/L			10/16/12 10:12	1
tert-Butylbenzene	ND		1.0		ug/L			10/16/12 10:12	1
Tetrachloroethene	ND		1.0		ug/L			10/16/12 10:12	1
Tetrahydrofuran	ND		10		ug/L			10/16/12 10:12	1
Toluene	ND		1.0		ug/L			10/16/12 10:12	1
trans-1,2-Dichloroethene	ND		1.0		ug/L			10/16/12 10:12	1
trans-1,3-Dichloropropene	ND		0.40		ug/L			10/16/12 10:12	1
Trichloroethene	ND		1.0		ug/L			10/16/12 10:12	1
Trichlorofluoromethane	ND		1.0		ug/L			10/16/12 10:12	1
Vinyl chloride	ND		0.50		ug/L			10/16/12 10:12	1

Method: 8260C - Volatile Organic Compounds (GC/MS) (Continued)

Surrogate	%Recovery	Qualifier	Limits	Prepared	Analyzed	Dil Fac
4-Bromofluorobenzene	98		70 - 130		10/16/12 10:12	1
Dibromofluoromethane	104		70 - 130		10/16/12 10:12	1
Toluene-d8 (Surr)	101		70 - 130		10/16/12 10:12	1

Client Sample ID: Drum-3-20121004-01 **Lab Sample ID: 360-43154-3**
Date Collected: 10/04/12 08:30 **Matrix: Water**
Date Received: 10/05/12 19:50

Analyte	Result	Qualifier	RL	MDL	Unit	D	Prepared	Analyzed	Dil Fac
1,1,1,2-Tetrachloroethane	ND		1.0		ug/L			10/16/12 10:34	1
1,1,1-Trichloroethane	ND		1.0		ug/L			10/16/12 10:34	1
1,1,2,2-Tetrachloroethane	ND		0.50		ug/L			10/16/12 10:34	1
1,1,2-Trichloroethane	ND		1.0		ug/L			10/16/12 10:34	1
1,1-Dichloroethane	ND		1.0		ug/L			10/16/12 10:34	1
1,1-Dichloroethene	ND		1.0		ug/L			10/16/12 10:34	1
1,1-Dichloropropene	ND		1.0		ug/L			10/16/12 10:34	1
1,2,3-Trichlorobenzene	ND		1.0		ug/L			10/16/12 10:34	1
1,2,3-Trichloropropane	ND		1.0		ug/L			10/16/12 10:34	1
1,2,4-Trichlorobenzene	ND		1.0		ug/L			10/16/12 10:34	1
1,2,4-Trimethylbenzene	ND		1.0		ug/L			10/16/12 10:34	1
1,2-Dibromo-3-Chloropropane	ND		5.0		ug/L			10/16/12 10:34	1
1,2-Dichlorobenzene	ND		1.0		ug/L			10/16/12 10:34	1
1,2-Dichloroethane	ND		1.0		ug/L			10/16/12 10:34	1
1,2-Dichloropropane	ND		1.0		ug/L			10/16/12 10:34	1
1,3,5-Trimethylbenzene	ND		1.0		ug/L			10/16/12 10:34	1
1,3-Dichlorobenzene	ND		1.0		ug/L			10/16/12 10:34	1
1,3-Dichloropropane	ND		1.0		ug/L			10/16/12 10:34	1
1,4-Dichlorobenzene	ND		1.0		ug/L			10/16/12 10:34	1
1,4-Dioxane	ND	*	50		ug/L			10/16/12 10:34	1
2,2-Dichloropropane	ND		1.0		ug/L			10/16/12 10:34	1
2-Butanone (MEK)	ND		10		ug/L			10/16/12 10:34	1
2-Chlorotoluene	ND		1.0		ug/L			10/16/12 10:34	1
2-Hexanone	ND		10		ug/L			10/16/12 10:34	1
4-Chlorotoluene	ND		1.0		ug/L			10/16/12 10:34	1
4-Isopropyltoluene	ND		1.0		ug/L			10/16/12 10:34	1
4-Methyl-2-pentanone (MIBK)	ND		10		ug/L			10/16/12 10:34	1
Acetone	**55**		50		ug/L			10/16/12 10:34	1
Benzene	ND		1.0		ug/L			10/16/12 10:34	1
Bromobenzene	ND		1.0		ug/L			10/16/12 10:34	1
Bromoform	ND		1.0		ug/L			10/16/12 10:34	1
Bromomethane	ND		2.0		ug/L			10/16/12 10:34	1
Carbon disulfide	ND		10		ug/L			10/16/12 10:34	1
Carbon tetrachloride	ND		1.0		ug/L			10/16/12 10:34	1
Chlorobenzene	ND		1.0		ug/L			10/16/12 10:34	1
Chlorobromomethane	ND		1.0		ug/L			10/16/12 10:34	1
Chlorodibromomethane	ND		0.50		ug/L			10/16/12 10:34	1
Chloroethane	ND		2.0		ug/L			10/16/12 10:34	1
Chloroform	ND		1.0		ug/L			10/16/12 10:34	1
Chloromethane	ND		2.0		ug/L			10/16/12 10:34	1
cis-1,2-Dichloroethene	ND		1.0		ug/L			10/16/12 10:34	1
cis-1,3-Dichloropropene	ND		0.40		ug/L			10/16/12 10:34	1
Dibromomethane	ND		1.0		ug/L			10/16/12 10:34	1
Dichlorobromomethane	ND		0.50		ug/L			10/16/12 10:34	1
Dichlorodifluoromethane	ND		1.0		ug/L			10/16/12 10:34	1
Ethyl ether	ND		1.0		ug/L			10/16/12 10:34	1

Method: 8260C - Volatile Organic Compounds (GC/MS) (Continued)

Client Sample ID: Drum-3-20121004-01 **Lab Sample ID: 360-43154-3**
Date Collected: 10/04/12 08:30 **Matrix: Water**
Date Received: 10/05/12 19:50

Analyte	Result	Qualifier	RL	MDL	Unit	D	Prepared	Analyzed	Dil Fac
Ethylbenzene	ND		1.0		ug/L			10/16/12 10:34	1
Ethylene Dibromide	ND		1.0		ug/L			10/16/12 10:34	1
Hexachlorobutadiene	ND		0.40		ug/L			10/16/12 10:34	1
Isopropyl ether	ND		10		ug/L			10/16/12 10:34	1
Isopropylbenzene	ND		1.0		ug/L			10/16/12 10:34	1
m-Xylene & p-Xylene	ND		2.0		ug/L			10/16/12 10:34	1
Methyl tert-butyl ether	ND		1.0		ug/L			10/16/12 10:34	1
Methylene Chloride	ND		2.0		ug/L			10/16/12 10:34	1
n-Butylbenzene	ND		1.0		ug/L			10/16/12 10:34	1
N-Propylbenzene	ND		1.0		ug/L			10/16/12 10:34	1
Naphthalene	ND		5.0		ug/L			10/16/12 10:34	1
o-Xylene	ND		1.0		ug/L			10/16/12 10:34	1
sec-Butylbenzene	ND		1.0		ug/L			10/16/12 10:34	1
Styrene	ND		1.0		ug/L			10/16/12 10:34	1
Tert-amyl methyl ether	ND		5.0		ug/L			10/16/12 10:34	1
Tert-butyl ethyl ether	ND		5.0		ug/L			10/16/12 10:34	1
tert-Butylbenzene	ND		1.0		ug/L			10/16/12 10:34	1
Tetrachloroethene	ND		1.0		ug/L			10/16/12 10:34	1
Tetrahydrofuran	ND		10		ug/L			10/16/12 10:34	1
Toluene	ND		1.0		ug/L			10/16/12 10:34	1
trans-1,2-Dichloroethene	ND		1.0		ug/L			10/16/12 10:34	1
trans-1,3-Dichloropropene	ND		0.40		ug/L			10/16/12 10:34	1
Trichloroethene	ND		1.0		ug/L			10/16/12 10:34	1
Trichlorofluoromethane	ND		1.0		ug/L			10/16/12 10:34	1
Vinyl chloride	ND		0.50		ug/L			10/16/12 10:34	1

Surrogate	*%Recovery*	*Qualifier*	*Limits*	*Prepared*	*Analyzed*	*Dil Fac*
4-Bromofluorobenzene	*101*		*70 - 130*		*10/16/12 10:34*	*1*
Dibromofluoromethane	*104*		*70 - 130*		*10/16/12 10:34*	*1*
Toluene-d8 (Surr)	*101*		*70 - 130*		*10/16/12 10:34*	*1*

Client Sample ID: Drum-4-20121004-01 **Lab Sample ID: 360-43154-4**
Date Collected: 10/04/12 08:45 **Matrix: Water**
Date Received: 10/05/12 19:50

Analyte	Result	Qualifier	RL	MDL	Unit	D	Prepared	Analyzed	Dil Fac
1,1,1,2-Tetrachloroethane	ND		1.0		ug/L			10/16/12 10:56	1
1,1,1-Trichloroethane	ND		1.0		ug/L			10/16/12 10:56	1
1,1,2,2-Tetrachloroethane	ND		0.50		ug/L			10/16/12 10:56	1
1,1,2-Trichloroethane	ND		1.0		ug/L			10/16/12 10:56	1
1,1-Dichloroethane	ND		1.0		ug/L			10/16/12 10:56	1
1,1-Dichloroethene	ND		1.0		ug/L			10/16/12 10:56	1
1,1-Dichloropropene	ND		1.0		ug/L			10/16/12 10:56	1
1,2,3-Trichlorobenzene	ND		1.0		ug/L			10/16/12 10:56	1
1,2,3-Trichloropropane	ND		1.0		ug/L			10/16/12 10:56	1
1,2,4-Trichlorobenzene	ND		1.0		ug/L			10/16/12 10:56	1
1,2,4-Trimethylbenzene	ND		1.0		ug/L			10/16/12 10:56	1
1,2-Dibromo-3-Chloropropane	ND		5.0		ug/L			10/16/12 10:56	1
1,2-Dichlorobenzene	ND		1.0		ug/L			10/16/12 10:56	1
1,2-Dichloroethane	ND		1.0		ug/L			10/16/12 10:56	1
1,2-Dichloropropane	ND		1.0		ug/L			10/16/12 10:56	1
1,3,5-Trimethylbenzene	ND		1.0		ug/L			10/16/12 10:56	1

Method: 8260C - Volatile Organic Compounds (GC/MS) (Continued)

Client Sample ID: Drum-4-20121004-01
Date Collected: 10/04/12 08:45
Date Received: 10/05/12 19:50

Lab Sample ID: 360-43154-4
Matrix: Water

Analyte	Result	Qualifier	RL	MDL	Unit	D	Prepared	Analyzed	Dil Fac
1,3-Dichlorobenzene	ND		1.0		ug/L			10/16/12 10:56	1
1,3-Dichloropropane	ND		1.0		ug/L			10/16/12 10:56	1
1,4-Dichlorobenzene	ND		1.0		ug/L			10/16/12 10:56	1
1,4-Dioxane	ND	*	50		ug/L			10/16/12 10:56	1
2,2-Dichloropropane	ND		1.0		ug/L			10/16/12 10:56	1
2-Butanone (MEK)	ND		10		ug/L			10/16/12 10:56	1
2-Chlorotoluene	ND		1.0		ug/L			10/16/12 10:56	1
2-Hexanone	ND		10		ug/L			10/16/12 10:56	1
4-Chlorotoluene	ND		1.0		ug/L			10/16/12 10:56	1
4-Isopropyltoluene	ND		1.0		ug/L			10/16/12 10:56	1
4-Methyl-2-pentanone (MIBK)	ND		10		ug/L			10/16/12 10:56	1
Acetone	ND		50		ug/L			10/16/12 10:56	1
Benzene	ND		1.0		ug/L			10/16/12 10:56	1
Bromobenzene	ND		1.0		ug/L			10/16/12 10:56	1
Bromoform	ND		1.0		ug/L			10/16/12 10:56	1
Bromomethane	ND		2.0		ug/L			10/16/12 10:56	1
Carbon disulfide	ND		10		ug/L			10/16/12 10:56	1
Carbon tetrachloride	ND		1.0		ug/L			10/16/12 10:56	1
Chlorobenzene	ND		1.0		ug/L			10/16/12 10:56	1
Chlorobromomethane	ND		1.0		ug/L			10/16/12 10:56	1
Chlorodibromomethane	ND		0.50		ug/L			10/16/12 10:56	1
Chloroethane	ND		2.0		ug/L			10/16/12 10:56	1
Chloroform	ND		1.0		ug/L			10/16/12 10:56	1
Chloromethane	ND		2.0		ug/L			10/16/12 10:56	1
cis-1,2-Dichloroethene	ND		1.0		ug/L			10/16/12 10:56	1
cis-1,3-Dichloropropene	ND		0.40		ug/L			10/16/12 10:56	1
Dibromomethane	ND		1.0		ug/L			10/16/12 10:56	1
Dichlorobromomethane	ND		0.50		ug/L			10/16/12 10:56	1
Dichlorodifluoromethane	ND		1.0		ug/L			10/16/12 10:56	1
Ethyl ether	ND		1.0		ug/L			10/16/12 10:56	1
Ethylbenzene	ND		1.0		ug/L			10/16/12 10:56	1
Ethylene Dibromide	ND		1.0		ug/L			10/16/12 10:56	1
Hexachlorobutadiene	ND		0.40		ug/L			10/16/12 10:56	1
Isopropyl ether	ND		10		ug/L			10/16/12 10:56	1
Isopropylbenzene	ND		1.0		ug/L			10/16/12 10:56	1
m-Xylene & p-Xylene	ND		2.0		ug/L			10/16/12 10:56	1
Methyl tert-butyl ether	ND		1.0		ug/L			10/16/12 10:56	1
Methylene Chloride	ND		2.0		ug/L			10/16/12 10:56	1
n-Butylbenzene	ND		1.0		ug/L			10/16/12 10:56	1
N-Propylbenzene	ND		1.0		ug/L			10/16/12 10:56	1
Naphthalene	ND		5.0		ug/L			10/16/12 10:56	1
o-Xylene	ND		1.0		ug/L			10/16/12 10:56	1
sec-Butylbenzene	ND		1.0		ug/L			10/16/12 10:56	1
Styrene	ND		1.0		ug/L			10/16/12 10:56	1
Tert-amyl methyl ether	ND		5.0		ug/L			10/16/12 10:56	1
Tert-butyl ethyl ether	ND		5.0		ug/L			10/16/12 10:56	1
tert-Butylbenzene	ND		1.0		ug/L			10/16/12 10:56	1
Tetrachloroethene	ND		1.0		ug/L			10/16/12 10:56	1
Tetrahydrofuran	ND		10		ug/L			10/16/12 10:56	1
Toluene	ND		1.0		ug/L			10/16/12 10:56	1
trans-1,2-Dichloroethene	ND		1.0		ug/L			10/16/12 10:56	1

Method: 8260C - Volatile Organic Compounds (GC/MS) (Continued)

Client Sample ID: Drum-4-20121004-01 **Lab Sample ID: 360-43154-4**
Date Collected: 10/04/12 08:45 **Matrix: Water**
Date Received: 10/05/12 19:50

Analyte	Result	Qualifier	RL	MDL	Unit	D	Prepared	Analyzed	Dil Fac
trans-1,3-Dichloropropene	ND		0.40		ug/L			10/16/12 10:56	1
Trichloroethene	ND		1.0		ug/L			10/16/12 10:56	1
Trichlorofluoromethane	ND		1.0		ug/L			10/16/12 10:56	1
Vinyl chloride	ND		0.50		ug/L			10/16/12 10:56	1

Surrogate	*%Recovery*	*Qualifier*	*Limits*	*Prepared*	*Analyzed*	*Dil Fac*
4-Bromofluorobenzene	*100*		*70 - 130*		*10/16/12 10:56*	*1*
Dibromofluoromethane	*103*		*70 - 130*		*10/16/12 10:56*	*1*
Toluene-d8 (Surr)	*100*		*70 - 130*		*10/16/12 10:56*	*1*

Client Sample ID: Drum-5-20121004-01 **Lab Sample ID: 360-43154-5**
Date Collected: 10/04/12 09:00 **Matrix: Water**
Date Received: 10/05/12 19:50

Analyte	Result	Qualifier	RL	MDL	Unit	D	Prepared	Analyzed	Dil Fac
1,1,1,2-Tetrachloroethane	ND		2.0		ug/L			10/16/12 11:17	2
1,1,1-Trichloroethane	ND		2.0		ug/L			10/16/12 11:17	2
1,1,2,2-Tetrachloroethane	ND		1.0		ug/L			10/16/12 11:17	2
1,1,2-Trichloroethane	ND		2.0		ug/L			10/16/12 11:17	2
1,1-Dichloroethane	ND		2.0		ug/L			10/16/12 11:17	2
1,1-Dichloroethene	ND		2.0		ug/L			10/16/12 11:17	2
1,1-Dichloropropene	ND		2.0		ug/L			10/16/12 11:17	2
1,2,3-Trichlorobenzene	ND		2.0		ug/L			10/16/12 11:17	2
1,2,3-Trichloropropane	ND		2.0		ug/L			10/16/12 11:17	2
1,2,4-Trichlorobenzene	ND		2.0		ug/L			10/16/12 11:17	2
1,2,4-Trimethylbenzene	ND		2.0		ug/L			10/16/12 11:17	2
1,2-Dibromo-3-Chloropropane	ND		10		ug/L			10/16/12 11:17	2
1,2-Dichlorobenzene	ND		2.0		ug/L			10/16/12 11:17	2
1,2-Dichloroethane	ND		2.0		ug/L			10/16/12 11:17	2
1,2-Dichloropropane	ND		2.0		ug/L			10/16/12 11:17	2
1,3,5-Trimethylbenzene	ND		2.0		ug/L			10/16/12 11:17	2
1,3-Dichlorobenzene	ND		2.0		ug/L			10/16/12 11:17	2
1,3-Dichloropropane	ND		2.0		ug/L			10/16/12 11:17	2
1,4-Dichlorobenzene	ND		2.0		ug/L			10/16/12 11:17	2
1,4-Dioxane	ND	*	100		ug/L			10/16/12 11:17	2
2,2-Dichloropropane	ND		2.0		ug/L			10/16/12 11:17	2
2-Butanone (MEK)	ND		20		ug/L			10/16/12 11:17	2
2-Chlorotoluene	ND		2.0		ug/L			10/16/12 11:17	2
2-Hexanone	ND		20		ug/L			10/16/12 11:17	2
4-Chlorotoluene	ND		2.0		ug/L			10/16/12 11:17	2
4-Isopropyltoluene	ND		2.0		ug/L			10/16/12 11:17	2
4-Methyl-2-pentanone (MIBK)	ND		20		ug/L			10/16/12 11:17	2
Acetone	ND		100		ug/L			10/16/12 11:17	2
Benzene	ND		2.0		ug/L			10/16/12 11:17	2
Bromobenzene	ND		2.0		ug/L			10/16/12 11:17	2
Bromoform	ND		2.0		ug/L			10/16/12 11:17	2
Bromomethane	ND		4.0		ug/L			10/16/12 11:17	2
Carbon disulfide	ND		20		ug/L			10/16/12 11:17	2
Carbon tetrachloride	ND		2.0		ug/L			10/16/12 11:17	2
Chlorobenzene	ND		2.0		ug/L			10/16/12 11:17	2
Chlorobromomethane	ND		2.0		ug/L			10/16/12 11:17	2
Chlorodibromomethane	ND		1.0		ug/L			10/16/12 11:17	2

Method: 8260C - Volatile Organic Compounds (GC/MS) (Continued)

Client Sample ID: Drum-5-20121004-01 **Lab Sample ID: 360-43154-5**
Date Collected: 10/04/12 09:00 **Matrix: Water**
Date Received: 10/05/12 19:50

Analyte	Result	Qualifier	RL	MDL	Unit	D	Prepared	Analyzed	Dil Fac
Chloroethane	ND		4.0		ug/L			10/16/12 11:17	2
Chloroform	ND		2.0		ug/L			10/16/12 11:17	2
Chloromethane	ND		4.0		ug/L			10/16/12 11:17	2
cis-1,2-Dichloroethene	ND		2.0		ug/L			10/16/12 11:17	2
cis-1,3-Dichloropropene	ND		0.80		ug/L			10/16/12 11:17	2
Dibromomethane	ND		2.0		ug/L			10/16/12 11:17	2
Dichlorobromomethane	ND		1.0		ug/L			10/16/12 11:17	2
Dichlorodifluoromethane	ND		2.0		ug/L			10/16/12 11:17	2
Ethyl ether	ND		2.0		ug/L			10/16/12 11:17	2
Ethylbenzene	ND		2.0		ug/L			10/16/12 11:17	2
Ethylene Dibromide	ND		2.0		ug/L			10/16/12 11:17	2
Hexachlorobutadiene	ND		0.80		ug/L			10/16/12 11:17	2
Isopropyl ether	ND		20		ug/L			10/16/12 11:17	2
Isopropylbenzene	ND		2.0		ug/L			10/16/12 11:17	2
m-Xylene & p-Xylene	ND		4.0		ug/L			10/16/12 11:17	2
Methyl tert-butyl ether	ND		2.0		ug/L			10/16/12 11:17	2
Methylene Chloride	ND		4.0		ug/L			10/16/12 11:17	2
n-Butylbenzene	ND		2.0		ug/L			10/16/12 11:17	2
N-Propylbenzene	ND		2.0		ug/L			10/16/12 11:17	2
Naphthalene	ND		10		ug/L			10/16/12 11:17	2
o-Xylene	ND		2.0		ug/L			10/16/12 11:17	2
sec-Butylbenzene	ND		2.0		ug/L			10/16/12 11:17	2
Styrene	ND		2.0		ug/L			10/16/12 11:17	2
Tert-amyl methyl ether	ND		10		ug/L			10/16/12 11:17	2
Tert-butyl ethyl ether	ND		10		ug/L			10/16/12 11:17	2
tert-Butylbenzene	ND		2.0		ug/L			10/16/12 11:17	2
Tetrachloroethene	ND		2.0		ug/L			10/16/12 11:17	2
Tetrahydrofuran	ND		20		ug/L			10/16/12 11:17	2
Toluene	ND		2.0		ug/L			10/16/12 11:17	2
trans-1,2-Dichloroethene	ND		2.0		ug/L			10/16/12 11:17	2
trans-1,3-Dichloropropene	ND		0.80		ug/L			10/16/12 11:17	2
Trichloroethene	ND		2.0		ug/L			10/16/12 11:17	2
Trichlorofluoromethane	ND		2.0		ug/L			10/16/12 11:17	2
Vinyl chloride	ND		1.0		ug/L			10/16/12 11:17	2

Surrogate	*%Recovery*	*Qualifier*	*Limits*	*Prepared*	*Analyzed*	*Dil Fac*
4-Bromofluorobenzene	*100*		*70 - 130*		*10/16/12 11:17*	*2*
Dibromofluoromethane	*104*		*70 - 130*		*10/16/12 11:17*	*2*
Toluene-d8 (Surr)	*99*		*70 - 130*		*10/16/12 11:17*	*2*

Client Sample ID: Drum-6-20121004-01 **Lab Sample ID: 360-43154-6**
Date Collected: 10/04/12 09:15 **Matrix: Water**
Date Received: 10/05/12 19:50

Analyte	Result	Qualifier	RL	MDL	Unit	D	Prepared	Analyzed	Dil Fac
1,1,1,2-Tetrachloroethane	ND		1.0		ug/L			10/16/12 11:41	1
1,1,1-Trichloroethane	ND		1.0		ug/L			10/16/12 11:41	1
1,1,2,2-Tetrachloroethane	ND		0.50		ug/L			10/16/12 11:41	1
1,1,2-Trichloroethane	ND		1.0		ug/L			10/16/12 11:41	1
1,1-Dichloroethane	ND		1.0		ug/L			10/16/12 11:41	1
1,1-Dichloroethene	ND		1.0		ug/L			10/16/12 11:41	1
1,1-Dichloropropene	ND		1.0		ug/L			10/16/12 11:41	1

Method: 8260C - Volatile Organic Compounds (GC/MS) (Continued)

Client Sample ID: Drum-6-20121004-01
Date Collected: 10/04/12 09:15
Date Received: 10/05/12 19:50

Lab Sample ID: 360-43154-6
Matrix: Water

Analyte	Result	Qualifier	RL	MDL	Unit	D	Prepared	Analyzed	Dil Fac
1,2,3-Trichlorobenzene	ND		1.0		ug/L			10/16/12 11:41	1
1,2,3-Trichloropropane	ND		1.0		ug/L			10/16/12 11:41	1
1,2,4-Trichlorobenzene	ND		1.0		ug/L			10/16/12 11:41	1
1,2,4-Trimethylbenzene	ND		1.0		ug/L			10/16/12 11:41	1
1,2-Dibromo-3-Chloropropane	ND		5.0		ug/L			10/16/12 11:41	1
1,2-Dichlorobenzene	ND		1.0		ug/L			10/16/12 11:41	1
1,2-Dichloroethane	ND		1.0		ug/L			10/16/12 11:41	1
1,2-Dichloropropane	ND		1.0		ug/L			10/16/12 11:41	1
1,3,5-Trimethylbenzene	ND		1.0		ug/L			10/16/12 11:41	1
1,3-Dichlorobenzene	ND		1.0		ug/L			10/16/12 11:41	1
1,3-Dichloropropane	ND		1.0		ug/L			10/16/12 11:41	1
1,4-Dichlorobenzene	ND		1.0		ug/L			10/16/12 11:41	1
1,4-Dioxane	ND	*	50		ug/L			10/16/12 11:41	1
2,2-Dichloropropane	ND		1.0		ug/L			10/16/12 11:41	1
2-Butanone (MEK)	ND		10		ug/L			10/16/12 11:41	1
2-Chlorotoluene	ND		1.0		ug/L			10/16/12 11:41	1
2-Hexanone	ND		10		ug/L			10/16/12 11:41	1
4-Chlorotoluene	ND		1.0		ug/L			10/16/12 11:41	1
4-Isopropyltoluene	ND		1.0		ug/L			10/16/12 11:41	1
4-Methyl-2-pentanone (MIBK)	ND		10		ug/L			10/16/12 11:41	1
Acetone	ND		50		ug/L			10/16/12 11:41	1
Benzene	ND		1.0		ug/L			10/16/12 11:41	1
Bromobenzene	ND		1.0		ug/L			10/16/12 11:41	1
Bromoform	ND		1.0		ug/L			10/16/12 11:41	1
Bromomethane	ND		2.0		ug/L			10/16/12 11:41	1
Carbon disulfide	ND		10		ug/L			10/16/12 11:41	1
Carbon tetrachloride	ND		1.0		ug/L			10/16/12 11:41	1
Chlorobenzene	ND		1.0		ug/L			10/16/12 11:41	1
Chlorobromomethane	ND		1.0		ug/L			10/16/12 11:41	1
Chlorodibromomethane	ND		0.50		ug/L			10/16/12 11:41	1
Chloroethane	ND		2.0		ug/L			10/16/12 11:41	1
Chloroform	ND		1.0		ug/L			10/16/12 11:41	1
Chloromethane	ND		2.0		ug/L			10/16/12 11:41	1
cis-1,2-Dichloroethene	ND		1.0		ug/L			10/16/12 11:41	1
cis-1,3-Dichloropropene	ND		0.40		ug/L			10/16/12 11:41	1
Dibromomethane	ND		1.0		ug/L			10/16/12 11:41	1
Dichlorobromomethane	ND		0.50		ug/L			10/16/12 11:41	1
Dichlorodifluoromethane	ND		1.0		ug/L			10/16/12 11:41	1
Ethyl ether	ND		1.0		ug/L			10/16/12 11:41	1
Ethylbenzene	ND		1.0		ug/L			10/16/12 11:41	1
Ethylene Dibromide	ND		1.0		ug/L			10/16/12 11:41	1
Hexachlorobutadiene	ND		0.40		ug/L			10/16/12 11:41	1
Isopropyl ether	ND		10		ug/L			10/16/12 11:41	1
Isopropylbenzene	ND		1.0		ug/L			10/16/12 11:41	1
m-Xylene & p-Xylene	ND		2.0		ug/L			10/16/12 11:41	1
Methyl tert-butyl ether	ND		1.0		ug/L			10/16/12 11:41	1
Methylene Chloride	ND		2.0		ug/L			10/16/12 11:41	1
n-Butylbenzene	ND		1.0		ug/L			10/16/12 11:41	1
N-Propylbenzene	ND		1.0		ug/L			10/16/12 11:41	1
Naphthalene	ND		5.0		ug/L			10/16/12 11:41	1
o-Xylene	ND		1.0		ug/L			10/16/12 11:41	1

Method: 8260C - Volatile Organic Compounds (GC/MS) (Continued)

Client Sample ID: Drum-6-20121004-01 — **Lab Sample ID: 360-43154-6**
Date Collected: 10/04/12 09:15 — **Matrix: Water**
Date Received: 10/05/12 19:50

Analyte	Result	Qualifier	RL	MDL	Unit	D	Prepared	Analyzed	Dil Fac
sec-Butylbenzene	ND		1.0		ug/L			10/16/12 11:41	1
Styrene	ND		1.0		ug/L			10/16/12 11:41	1
Tert-amyl methyl ether	ND		5.0		ug/L			10/16/12 11:41	1
Tert-butyl ethyl ether	ND		5.0		ug/L			10/16/12 11:41	1
tert-Butylbenzene	ND		1.0		ug/L			10/16/12 11:41	1
Tetrachloroethene	ND		1.0		ug/L			10/16/12 11:41	1
Tetrahydrofuran	ND		10		ug/L			10/16/12 11:41	1
Toluene	ND		1.0		ug/L			10/16/12 11:41	1
trans-1,2-Dichloroethene	ND		1.0		ug/L			10/16/12 11:41	1
trans-1,3-Dichloropropene	ND		0.40		ug/L			10/16/12 11:41	1
Trichloroethene	**1.6**		1.0		ug/L			10/16/12 11:41	1
Trichlorofluoromethane	ND		1.0		ug/L			10/16/12 11:41	1
Vinyl chloride	ND		0.50		ug/L			10/16/12 11:41	1

Surrogate	*%Recovery*	*Qualifier*	*Limits*	*Prepared*	*Analyzed*	*Dil Fac*
4-Bromofluorobenzene	*101*		*70 - 130*		*10/16/12 11:41*	*1*
Dibromofluoromethane	*103*		*70 - 130*		*10/16/12 11:41*	*1*
Toluene-d8 (Surr)	*100*		*70 - 130*		*10/16/12 11:41*	*1*

Client Sample ID: Dup-001-20121004-01 — **Lab Sample ID: 360-43154-7**
Date Collected: 10/04/12 12:00 — **Matrix: Water**
Date Received: 10/05/12 19:50

Analyte	Result	Qualifier	RL	MDL	Unit	D	Prepared	Analyzed	Dil Fac
1,1,1,2-Tetrachloroethane	ND		1.0		ug/L			10/16/12 12:03	1
1,1,1-Trichloroethane	ND		1.0		ug/L			10/16/12 12:03	1
1,1,2,2-Tetrachloroethane	ND		0.50		ug/L			10/16/12 12:03	1
1,1,2-Trichloroethane	ND		1.0		ug/L			10/16/12 12:03	1
1,1-Dichloroethane	ND		1.0		ug/L			10/16/12 12:03	1
1,1-Dichloroethene	ND		1.0		ug/L			10/16/12 12:03	1
1,1-Dichloropropene	ND		1.0		ug/L			10/16/12 12:03	1
1,2,3-Trichlorobenzene	ND		1.0		ug/L			10/16/12 12:03	1
1,2,3-Trichloropropane	ND		1.0		ug/L			10/16/12 12:03	1
1,2,4-Trichlorobenzene	ND		1.0		ug/L			10/16/12 12:03	1
1,2,4-Trimethylbenzene	ND		1.0		ug/L			10/16/12 12:03	1
1,2-Dibromo-3-Chloropropane	ND		5.0		ug/L			10/16/12 12:03	1
1,2-Dichlorobenzene	ND		1.0		ug/L			10/16/12 12:03	1
1,2-Dichloroethane	ND		1.0		ug/L			10/16/12 12:03	1
1,2-Dichloropropane	ND		1.0		ug/L			10/16/12 12:03	1
1,3,5-Trimethylbenzene	ND		1.0		ug/L			10/16/12 12:03	1
1,3-Dichlorobenzene	ND		1.0		ug/L			10/16/12 12:03	1
1,3-Dichloropropane	ND		1.0		ug/L			10/16/12 12:03	1
1,4-Dichlorobenzene	ND		1.0		ug/L			10/16/12 12:03	1
1,4-Dioxane	ND	*	50		ug/L			10/16/12 12:03	1
2,2-Dichloropropane	ND		1.0		ug/L			10/16/12 12:03	1
2-Butanone (MEK)	ND		10		ug/L			10/16/12 12:03	1
2-Chlorotoluene	ND		1.0		ug/L			10/16/12 12:03	1
2-Hexanone	ND		10		ug/L			10/16/12 12:03	1
4-Chlorotoluene	ND		1.0		ug/L			10/16/12 12:03	1
4-Isopropyltoluene	ND		1.0		ug/L			10/16/12 12:03	1
4-Methyl-2-pentanone (MIBK)	ND		10		ug/L			10/16/12 12:03	1
Acetone	ND		50		ug/L			10/16/12 12:03	1

Method: 8260C - Volatile Organic Compounds (GC/MS) (Continued)

Client Sample ID: Dup-001-20121004-01
Date Collected: 10/04/12 12:00
Date Received: 10/05/12 19:50

Lab Sample ID: 360-43154-7
Matrix: Water

Analyte	Result	Qualifier	RL	MDL	Unit	D	Prepared	Analyzed	Dil Fac
Benzene	ND		1.0		ug/L			10/16/12 12:03	1
Bromobenzene	ND		1.0		ug/L			10/16/12 12:03	1
Bromoform	ND		1.0		ug/L			10/16/12 12:03	1
Bromomethane	ND		2.0		ug/L			10/16/12 12:03	1
Carbon disulfide	ND		10		ug/L			10/16/12 12:03	1
Carbon tetrachloride	ND		1.0		ug/L			10/16/12 12:03	1
Chlorobenzene	ND		1.0		ug/L			10/16/12 12:03	1
Chlorobromomethane	ND		1.0		ug/L			10/16/12 12:03	1
Chlorodibromomethane	ND		0.50		ug/L			10/16/12 12:03	1
Chloroethane	ND		2.0		ug/L			10/16/12 12:03	1
Chloroform	ND		1.0		ug/L			10/16/12 12:03	1
Chloromethane	ND		2.0		ug/L			10/16/12 12:03	1
cis-1,2-Dichloroethene	ND		1.0		ug/L			10/16/12 12:03	1
cis-1,3-Dichloropropene	ND		0.40		ug/L			10/16/12 12:03	1
Dibromomethane	ND		1.0		ug/L			10/16/12 12:03	1
Dichlorobromomethane	ND		0.50		ug/L			10/16/12 12:03	1
Dichlorodifluoromethane	ND		1.0		ug/L			10/16/12 12:03	1
Ethyl ether	ND		1.0		ug/L			10/16/12 12:03	1
Ethylbenzene	ND		1.0		ug/L			10/16/12 12:03	1
Ethylene Dibromide	ND		1.0		ug/L			10/16/12 12:03	1
Hexachlorobutadiene	ND		0.40		ug/L			10/16/12 12:03	1
Isopropyl ether	ND		10		ug/L			10/16/12 12:03	1
Isopropylbenzene	ND		1.0		ug/L			10/16/12 12:03	1
m-Xylene & p-Xylene	ND		2.0		ug/L			10/16/12 12:03	1
Methyl tert-butyl ether	ND		1.0		ug/L			10/16/12 12:03	1
Methylene Chloride	ND		2.0		ug/L			10/16/12 12:03	1
n-Butylbenzene	ND		1.0		ug/L			10/16/12 12:03	1
N-Propylbenzene	ND		1.0		ug/L			10/16/12 12:03	1
Naphthalene	ND		5.0		ug/L			10/16/12 12:03	1
o-Xylene	ND		1.0		ug/L			10/16/12 12:03	1
sec-Butylbenzene	ND		1.0		ug/L			10/16/12 12:03	1
Styrene	ND		1.0		ug/L			10/16/12 12:03	1
Tert-amyl methyl ether	ND		5.0		ug/L			10/16/12 12:03	1
Tert-butyl ethyl ether	ND		5.0		ug/L			10/16/12 12:03	1
tert-Butylbenzene	ND		1.0		ug/L			10/16/12 12:03	1
Tetrachloroethene	ND		1.0		ug/L			10/16/12 12:03	1
Tetrahydrofuran	ND		10		ug/L			10/16/12 12:03	1
Toluene	ND		1.0		ug/L			10/16/12 12:03	1
trans-1,2-Dichloroethene	ND		1.0		ug/L			10/16/12 12:03	1
trans-1,3-Dichloropropene	ND		0.40		ug/L			10/16/12 12:03	1
Trichloroethene	ND		1.0		ug/L			10/16/12 12:03	1
Trichlorofluoromethane	ND		1.0		ug/L			10/16/12 12:03	1
Vinyl chloride	ND		0.50		ug/L			10/16/12 12:03	1

Surrogate	*%Recovery*	*Qualifier*	*Limits*	*Prepared*	*Analyzed*	*Dil Fac*
4-Bromofluorobenzene	*100*		*70 - 130*		*10/16/12 12:03*	*1*
Dibromofluoromethane	*106*		*70 - 130*		*10/16/12 12:03*	*1*
Toluene-d8 (Surr)	*101*		*70 - 130*		*10/16/12 12:03*	*1*

Method: 8260C - Volatile Organic Compounds (GC/MS)

Client Sample ID: Tripblank
Date Collected: 10/04/12 08:00
Date Received: 10/05/12 19:50

Lab Sample ID: 360-43154-8
Matrix: Water

Analyte	Result	Qualifier	RL	MDL	Unit	D	Prepared	Analyzed	Dil Fac
1,1,1,2-Tetrachloroethane	ND		1.0		ug/L			10/16/12 12:25	1
1,1,1-Trichloroethane	ND		1.0		ug/L			10/16/12 12:25	1
1,1,2,2-Tetrachloroethane	ND		0.50		ug/L			10/16/12 12:25	1
1,1,2-Trichloroethane	ND		1.0		ug/L			10/16/12 12:25	1
1,1-Dichloroethane	ND		1.0		ug/L			10/16/12 12:25	1
1,1-Dichloroethene	ND		1.0		ug/L			10/16/12 12:25	1
1,1-Dichloropropene	ND		1.0		ug/L			10/16/12 12:25	1
1,2,3-Trichlorobenzene	ND		1.0		ug/L			10/16/12 12:25	1
1,2,3-Trichloropropane	ND		1.0		ug/L			10/16/12 12:25	1
1,2,4-Trichlorobenzene	ND		1.0		ug/L			10/16/12 12:25	1
1,2,4-Trimethylbenzene	ND		1.0		ug/L			10/16/12 12:25	1
1,2-Dibromo-3-Chloropropane	ND		5.0		ug/L			10/16/12 12:25	1
1,2-Dichlorobenzene	ND		1.0		ug/L			10/16/12 12:25	1
1,2-Dichloroethane	ND		1.0		ug/L			10/16/12 12:25	1
1,2-Dichloropropane	ND		1.0		ug/L			10/16/12 12:25	1
1,3,5-Trimethylbenzene	ND		1.0		ug/L			10/16/12 12:25	1
1,3-Dichlorobenzene	ND		1.0		ug/L			10/16/12 12:25	1
1,3-Dichloropropane	ND		1.0		ug/L			10/16/12 12:25	1
1,4-Dichlorobenzene	ND		1.0		ug/L			10/16/12 12:25	1
1,4-Dioxane	ND	*	50		ug/L			10/16/12 12:25	1
2,2-Dichloropropane	ND		1.0		ug/L			10/16/12 12:25	1
2-Butanone (MEK)	ND		10		ug/L			10/16/12 12:25	1
2-Chlorotoluene	ND		1.0		ug/L			10/16/12 12:25	1
2-Hexanone	ND		10		ug/L			10/16/12 12:25	1
4-Chlorotoluene	ND		1.0		ug/L			10/16/12 12:25	1
4-Isopropyltoluene	ND		1.0		ug/L			10/16/12 12:25	1
4-Methyl-2-pentanone (MIBK)	ND		10		ug/L			10/16/12 12:25	1
Acetone	ND		50		ug/L			10/16/12 12:25	1
Benzene	ND		1.0		ug/L			10/16/12 12:25	1
Bromobenzene	ND		1.0		ug/L			10/16/12 12:25	1
Bromoform	ND		1.0		ug/L			10/16/12 12:25	1
Bromomethane	ND		2.0		ug/L			10/16/12 12:25	1
Carbon disulfide	ND		10		ug/L			10/16/12 12:25	1
Carbon tetrachloride	ND		1.0		ug/L			10/16/12 12:25	1
Chlorobenzene	ND		1.0		ug/L			10/16/12 12:25	1
Chlorobromomethane	ND		1.0		ug/L			10/16/12 12:25	1
Chlorodibromomethane	ND		0.50		ug/L			10/16/12 12:25	1
Chloroethane	ND		2.0		ug/L			10/16/12 12:25	1
Chloroform	ND		1.0		ug/L			10/16/12 12:25	1
Chloromethane	ND		2.0		ug/L			10/16/12 12:25	1
cis-1,2-Dichloroethene	ND		1.0		ug/L			10/16/12 12:25	1
cis-1,3-Dichloropropene	ND		0.40		ug/L			10/16/12 12:25	1
Dibromomethane	ND		1.0		ug/L			10/16/12 12:25	1
Dichlorobromomethane	ND		0.50		ug/L			10/16/12 12:25	1
Dichlorodifluoromethane	ND		1.0		ug/L			10/16/12 12:25	1
Ethyl ether	ND		1.0		ug/L			10/16/12 12:25	1
Ethylbenzene	ND		1.0		ug/L			10/16/12 12:25	1
Ethylene Dibromide	ND		1.0		ug/L			10/16/12 12:25	1
Hexachlorobutadiene	ND		0.40		ug/L			10/16/12 12:25	1
Isopropyl ether	ND		10		ug/L			10/16/12 12:25	1
Isopropylbenzene	ND		1.0		ug/L			10/16/12 12:25	1

Method: 8260C - Volatile Organic Compounds (GC/MS) (Continued)

Client Sample ID: Tripblank
Date Collected: 10/04/12 08:00
Date Received: 10/05/12 19:50

Lab Sample ID: 360-43154-8
Matrix: Water

Analyte	Result	Qualifier	RL	MDL	Unit	D	Prepared	Analyzed	Dil Fac
m-Xylene & p-Xylene	ND		2.0		ug/L			10/16/12 12:25	1
Methyl tert-butyl ether	ND		1.0		ug/L			10/16/12 12:25	1
Methylene Chloride	ND		2.0		ug/L			10/16/12 12:25	1
n-Butylbenzene	ND		1.0		ug/L			10/16/12 12:25	1
N-Propylbenzene	ND		1.0		ug/L			10/16/12 12:25	1
Naphthalene	ND		5.0		ug/L			10/16/12 12:25	1
o-Xylene	ND		1.0		ug/L			10/16/12 12:25	1
sec-Butylbenzene	ND		1.0		ug/L			10/16/12 12:25	1
Styrene	ND		1.0		ug/L			10/16/12 12:25	1
Tert-amyl methyl ether	ND		5.0		ug/L			10/16/12 12:25	1
Tert-butyl ethyl ether	ND		5.0		ug/L			10/16/12 12:25	1
tert-Butylbenzene	ND		1.0		ug/L			10/16/12 12:25	1
Tetrachloroethene	ND		1.0		ug/L			10/16/12 12:25	1
Tetrahydrofuran	ND		10		ug/L			10/16/12 12:25	1
Toluene	ND		1.0		ug/L			10/16/12 12:25	1
trans-1,2-Dichloroethene	ND		1.0		ug/L			10/16/12 12:25	1
trans-1,3-Dichloropropene	ND		0.40		ug/L			10/16/12 12:25	1
Trichloroethene	ND		1.0		ug/L			10/16/12 12:25	1
Trichlorofluoromethane	ND		1.0		ug/L			10/16/12 12:25	1
Vinyl chloride	ND		0.50		ug/L			10/16/12 12:25	1

Surrogate	*%Recovery*	*Qualifier*	*Limits*	*Prepared*	*Analyzed*	*Dil Fac*
4-Bromofluorobenzene	*101*		*70 - 130*		*10/16/12 12:25*	*1*
Dibromofluoromethane	*105*		*70 - 130*		*10/16/12 12:25*	*1*
Toluene-d8 (Surr)	*99*		*70 - 130*		*10/16/12 12:25*	*1*

Qualifiers

GC/MS VOA

Qualifier	Qualifier Description
*	LCS or LCSD exceeds the control limits

Glossary

Abbreviation	These commonly used abbreviations may or may not be present in this report.
☼	Listed under the "D" column to designate that the result is reported on a dry weight basis
%R	Percent Recovery
CNF	Contains no Free Liquid
DL, RA, RE, IN	Indicates a Dilution, Reanalysis, Re-extraction, or additional Initial metals/anion analysis of the sample
EDL	Estimated Detection Limit
EPA	United States Environmental Protection Agency
MDL	Method Detection Limit
ML	Minimum Level (Dioxin)
ND	Not detected at the reporting limit (or MDL or EDL if shown)
PQL	Practical Quantitation Limit
QC	Quality Control
RL	Reporting Limit
RPD	Relative Percent Difference, a measure of the relative difference between two points
TEF	Toxicity Equivalent Factor (Dioxin)
TEQ	Toxicity Equivalent Quotient (Dioxin)

QC Association Summary

Client: ERM-Northeast
Project/Site: IDS Wayland

TestAmerica Job ID: 360-43154-1

GC/MS VOA

Analysis Batch: 96638

Lab Sample ID	Client Sample ID	Prep Type	Matrix	Method	Prep Batch
360-43154-1	Drum-1-20121004-01	Total/NA	Water	8260C	
360-43154-2	Drum-2-20121004-01	Total/NA	Water	8260C	
360-43154-3	Drum-3-20121004-01	Total/NA	Water	8260C	
360-43154-4	Drum-4-20121004-01	Total/NA	Water	8260C	
360-43154-5	Drum-5-20121004-01	Total/NA	Water	8260C	
360-43154-6	Drum-6-20121004-01	Total/NA	Water	8260C	
360-43154-7	Dup-001-20121004-01	Total/NA	Water	8260C	
360-43154-8	Tripblank	Total/NA	Water	8260C	
LCS 360-96638/3	Lab Control Sample	Total/NA	Water	8260C	
LCSD 360-96638/4	Lab Control Sample Dup	Total/NA	Water	8260C	
MB 360-96638/6	Method Blank	Total/NA	Water	8260C	

Surrogate Summary

Client: ERM-Northeast
Project/Site: IDS Wayland

TestAmerica Job ID: 360-43154-1

Method: 8260C - Volatile Organic Compounds (GC/MS)

Matrix: Water **Prep Type: Total/NA**

		Percent Surrogate Recovery (Acceptance Limits)		
		BFB	DBFM	TOL
Lab Sample ID	Client Sample ID	(70-130)	(70-130)	(70-130)
360-43154-1	Drum-1-20121004-01	100	104	100
360-43154-2	Drum-2-20121004-01	98	104	101
360-43154-3	Drum-3-20121004-01	101	104	101
360-43154-4	Drum-4-20121004-01	100	103	100
360-43154-5	Drum-5-20121004-01	100	104	99
360-43154-6	Drum-6-20121004-01	101	103	100
360-43154-7	Dup-001-20121004-01	100	106	101
360-43154-8	Tripblank	101	105	99
LCS 360-96638/3	Lab Control Sample	101	102	102
LCSD 360-96638/4	Lab Control Sample Dup	102	102	100
MB 360-96638/6	Method Blank	98	103	101

Surrogate Legend

BFB = 4-Bromofluorobenzene

DBFM = Dibromofluoromethane

TOL = Toluene-d8 (Surr)

Method: 8260C - Volatile Organic Compounds (GC/MS)

Lab Sample ID: MB 360-96638/6
Matrix: Water
Analysis Batch: 96638

Client Sample ID: Method Blank
Prep Type: Total/NA

Analyte	MB Result	MB Qualifier	RL	MDL	Unit	D	Prepared	Analyzed	Dil Fac
1,1,1,2-Tetrachloroethane	ND		1.0		ug/L			10/16/12 05:51	1
1,1,1-Trichloroethane	ND		1.0		ug/L			10/16/12 05:51	1
1,1,2,2-Tetrachloroethane	ND		0.50		ug/L			10/16/12 05:51	1
1,1,2-Trichloroethane	ND		1.0		ug/L			10/16/12 05:51	1
1,1-Dichloroethane	ND		1.0		ug/L			10/16/12 05:51	1
1,1-Dichloroethene	ND		1.0		ug/L			10/16/12 05:51	1
1,1-Dichloropropene	ND		1.0		ug/L			10/16/12 05:51	1
1,2,3-Trichlorobenzene	ND		1.0		ug/L			10/16/12 05:51	1
1,2,3-Trichloropropane	ND		1.0		ug/L			10/16/12 05:51	1
1,2,4-Trichlorobenzene	ND		1.0		ug/L			10/16/12 05:51	1
1,2,4-Trimethylbenzene	ND		1.0		ug/L			10/16/12 05:51	1
1,2-Dibromo-3-Chloropropane	ND		5.0		ug/L			10/16/12 05:51	1
1,2-Dichlorobenzene	ND		1.0		ug/L			10/16/12 05:51	1
1,2-Dichloroethane	ND		1.0		ug/L			10/16/12 05:51	1
1,2-Dichloropropane	ND		1.0		ug/L			10/16/12 05:51	1
1,3,5-Trimethylbenzene	ND		1.0		ug/L			10/16/12 05:51	1
1,3-Dichlorobenzene	ND		1.0		ug/L			10/16/12 05:51	1
1,3-Dichloropropane	ND		1.0		ug/L			10/16/12 05:51	1
1,4-Dichlorobenzene	ND		1.0		ug/L			10/16/12 05:51	1
1,4-Dioxane	ND		50		ug/L			10/16/12 05:51	1
2,2-Dichloropropane	ND		1.0		ug/L			10/16/12 05:51	1
2-Butanone (MEK)	ND		10		ug/L			10/16/12 05:51	1
2-Chlorotoluene	ND		1.0		ug/L			10/16/12 05:51	1
2-Hexanone	ND		10		ug/L			10/16/12 05:51	1
4-Chlorotoluene	ND		1.0		ug/L			10/16/12 05:51	1
4-Isopropyltoluene	ND		1.0		ug/L			10/16/12 05:51	1
4-Methyl-2-pentanone (MIBK)	ND		10		ug/L			10/16/12 05:51	1
Acetone	ND		50		ug/L			10/16/12 05:51	1
Benzene	ND		1.0		ug/L			10/16/12 05:51	1
Bromobenzene	ND		1.0		ug/L			10/16/12 05:51	1
Bromoform	ND		1.0		ug/L			10/16/12 05:51	1
Bromomethane	ND		2.0		ug/L			10/16/12 05:51	1
Carbon disulfide	ND		10		ug/L			10/16/12 05:51	1
Carbon tetrachloride	ND		1.0		ug/L			10/16/12 05:51	1
Chlorobenzene	ND		1.0		ug/L			10/16/12 05:51	1
Chlorobromomethane	ND		1.0		ug/L			10/16/12 05:51	1
Chlorodibromomethane	ND		0.50		ug/L			10/16/12 05:51	1
Chloroethane	ND		2.0		ug/L			10/16/12 05:51	1
Chloroform	ND		1.0		ug/L			10/16/12 05:51	1
Chloromethane	ND		2.0		ug/L			10/16/12 05:51	1
cis-1,2-Dichloroethene	ND		1.0		ug/L			10/16/12 05:51	1
cis-1,3-Dichloropropene	ND		0.40		ug/L			10/16/12 05:51	1
Dibromomethane	ND		1.0		ug/L			10/16/12 05:51	1
Dichlorobromomethane	ND		0.50		ug/L			10/16/12 05:51	1
Dichlorodifluoromethane	ND		1.0		ug/L			10/16/12 05:51	1
Ethyl ether	ND		1.0		ug/L			10/16/12 05:51	1
Ethylbenzene	ND		1.0		ug/L			10/16/12 05:51	1
Ethylene Dibromide	ND		1.0		ug/L			10/16/12 05:51	1
Hexachlorobutadiene	ND		0.40		ug/L			10/16/12 05:51	1

Method: 8260C - Volatile Organic Compounds (GC/MS) (Continued)

Lab Sample ID: MB 360-96638/6
Matrix: Water
Analysis Batch: 96638

Client Sample ID: Method Blank
Prep Type: Total/NA

Analyte	MB Result	MB Qualifier	RL	MDL	Unit	D	Prepared	Analyzed	Dil Fac
Isopropyl ether	ND		10		ug/L			10/16/12 05:51	1
Isopropylbenzene	ND		1.0		ug/L			10/16/12 05:51	1
m-Xylene & p-Xylene	ND		2.0		ug/L			10/16/12 05:51	1
Methyl tert-butyl ether	ND		1.0		ug/L			10/16/12 05:51	1
Methylene Chloride	ND		2.0		ug/L			10/16/12 05:51	1
n-Butylbenzene	ND		1.0		ug/L			10/16/12 05:51	1
N-Propylbenzene	ND		1.0		ug/L			10/16/12 05:51	1
Naphthalene	ND		5.0		ug/L			10/16/12 05:51	1
o-Xylene	ND		1.0		ug/L			10/16/12 05:51	1
sec-Butylbenzene	ND		1.0		ug/L			10/16/12 05:51	1
Styrene	ND		1.0		ug/L			10/16/12 05:51	1
Tert-amyl methyl ether	ND		5.0		ug/L			10/16/12 05:51	1
Tert-butyl ethyl ether	ND		5.0		ug/L			10/16/12 05:51	1
tert-Butylbenzene	ND		1.0		ug/L			10/16/12 05:51	1
Tetrachloroethene	ND		1.0		ug/L			10/16/12 05:51	1
Tetrahydrofuran	ND		10		ug/L			10/16/12 05:51	1
Toluene	ND		1.0		ug/L			10/16/12 05:51	1
trans-1,2-Dichloroethene	ND		1.0		ug/L			10/16/12 05:51	1
trans-1,3-Dichloropropene	ND		0.40		ug/L			10/16/12 05:51	1
Trichloroethene	ND		1.0		ug/L			10/16/12 05:51	1
Trichlorofluoromethane	ND		1.0		ug/L			10/16/12 05:51	1
Vinyl chloride	ND		0.50		ug/L			10/16/12 05:51	1

Surrogate	*MB %Recovery*	*MB Qualifier*	*Limits*	*Prepared*	*Analyzed*	*Dil Fac*
4-Bromofluorobenzene	*98*		*70 - 130*		*10/16/12 05:51*	*1*
Dibromofluoromethane	*103*		*70 - 130*		*10/16/12 05:51*	*1*
Toluene-d8 (Surr)	*101*		*70 - 130*		*10/16/12 05:51*	*1*

Lab Sample ID: LCS 360-96638/3
Matrix: Water
Analysis Batch: 96638

Client Sample ID: Lab Control Sample
Prep Type: Total/NA

Analyte	Spike Added	LCS Result	LCS Qualifier	Unit	D	%Rec	%Rec. Limits
1,1,1,2-Tetrachloroethane	20.0	19.6		ug/L		98	70 - 130
1,1,1-Trichloroethane	20.0	18.9		ug/L		95	70 - 130
1,1,2,2-Tetrachloroethane	20.0	20.0		ug/L		100	70 - 130
1,1,2-Trichloroethane	20.0	20.2		ug/L		101	70 - 130
1,1-Dichloroethane	20.0	19.9		ug/L		99	70 - 130
1,1-Dichloroethene	20.0	17.9		ug/L		89	70 - 130
1,1-Dichloropropene	20.0	18.7		ug/L		94	70 - 130
1,2,3-Trichlorobenzene	20.0	19.8		ug/L		99	70 - 130
1,2,3-Trichloropropane	20.0	20.0		ug/L		100	70 - 130
1,2,4-Trichlorobenzene	20.0	20.3		ug/L		101	70 - 130
1,2,4-Trimethylbenzene	20.0	19.9		ug/L		99	70 - 130
1,2-Dibromo-3-Chloropropane	20.0	19.8		ug/L		99	70 - 130
1,2-Dichlorobenzene	20.0	19.4		ug/L		97	70 - 130
1,2-Dichloroethane	20.0	19.8		ug/L		99	70 - 130
1,2-Dichloropropane	20.0	20.3		ug/L		102	70 - 130
1,3,5-Trimethylbenzene	20.0	19.8		ug/L		99	70 - 130

Method: 8260C - Volatile Organic Compounds (GC/MS) (Continued)

Lab Sample ID: LCS 360-96638/3
Matrix: Water
Analysis Batch: 96638

Client Sample ID: Lab Control Sample
Prep Type: Total/NA

Analyte	Spike Added	LCS Result	LCS Qualifier	Unit	D	%Rec	%Rec. Limits
1,3-Dichlorobenzene	20.0	18.9		ug/L		94	70 - 130
1,3-Dichloropropane	20.0	20.1		ug/L		101	70 - 130
1,4-Dichlorobenzene	20.0	18.6		ug/L		93	70 - 130
1,4-Dioxane	200	280	*	ug/L		140	70 - 130
2,2-Dichloropropane	20.0	16.4		ug/L		82	70 - 130
2-Butanone (MEK)	200	156		ug/L		78	70 - 130
2-Chlorotoluene	20.0	19.4		ug/L		97	70 - 130
2-Hexanone	200	201		ug/L		101	70 - 130
4-Chlorotoluene	20.0	19.1		ug/L		96	70 - 130
4-Isopropyltoluene	20.0	20.1		ug/L		101	70 - 130
4-Methyl-2-pentanone (MIBK)	200	206		ug/L		103	70 - 130
Acetone	200	152		ug/L		76	70 - 130
Benzene	20.0	19.3		ug/L		97	70 - 130
Bromobenzene	20.0	18.5		ug/L		93	70 - 130
Bromoform	20.0	18.5		ug/L		93	70 - 130
Bromomethane	20.0	20.9		ug/L		105	70 - 130
Carbon disulfide	20.0	22.8		ug/L		114	70 - 130
Carbon tetrachloride	20.0	19.0		ug/L		95	70 - 130
Chlorobenzene	20.0	19.1		ug/L		95	70 - 130
Chlorobromomethane	20.0	19.6		ug/L		98	70 - 130
Chlorodibromomethane	20.0	19.3		ug/L		97	70 - 130
Chloroethane	20.0	21.8		ug/L		109	70 - 130
Chloroform	20.0	19.5		ug/L		98	70 - 130
Chloromethane	20.0	18.2		ug/L		91	70 - 130
cis-1,2-Dichloroethene	20.0	19.8		ug/L		99	70 - 130
cis-1,3-Dichloropropene	20.0	18.8		ug/L		94	70 - 130
Dibromomethane	20.0	20.4		ug/L		102	70 - 130
Dichlorobromomethane	20.0	19.6		ug/L		98	70 - 130
Dichlorodifluoromethane	20.0	15.9		ug/L		80	70 - 130
Ethyl ether	20.0	20.7		ug/L		103	70 - 130
Ethylbenzene	20.0	19.1		ug/L		96	70 - 130
Ethylene Dibromide	20.0	20.0		ug/L		100	70 - 130
Hexachlorobutadiene	20.0	18.3		ug/L		92	70 - 130
Isopropyl ether	20.0	19.9		ug/L		100	70 - 130
Isopropylbenzene	20.0	19.6		ug/L		98	70 - 130
m-Xylene & p-Xylene	40.0	37.7		ug/L		94	70 - 130
Methyl tert-butyl ether	20.0	20.4		ug/L		102	70 - 130
Methylene Chloride	20.0	20.5		ug/L		102	70 - 130
n-Butylbenzene	20.0	19.3		ug/L		97	70 - 130
N-Propylbenzene	20.0	19.8		ug/L		99	70 - 130
Naphthalene	20.0	20.9		ug/L		105	70 - 130
o-Xylene	20.0	19.1		ug/L		96	70 - 130
sec-Butylbenzene	20.0	19.9		ug/L		99	70 - 130
Styrene	20.0	19.5		ug/L		98	70 - 130
Tert-amyl methyl ether	20.0	19.6		ug/L		98	70 - 130
Tert-butyl ethyl ether	20.0	20.4		ug/L		102	70 - 130
tert-Butylbenzene	20.0	19.8		ug/L		99	70 - 130
Tetrachloroethene	20.0	19.5		ug/L		98	70 - 130
Tetrahydrofuran	200	213		ug/L		107	70 - 130
Toluene	20.0	18.6		ug/L		93	70 - 130

Method: 8260C - Volatile Organic Compounds (GC/MS) (Continued)

Lab Sample ID: LCS 360-96638/3
Matrix: Water
Analysis Batch: 96638

Client Sample ID: Lab Control Sample
Prep Type: Total/NA

Analyte	Spike Added	LCS Result	LCS Qualifier	Unit	D	%Rec	%Rec. Limits
trans-1,2-Dichloroethene	20.0	19.3		ug/L		96	70 - 130
trans-1,3-Dichloropropene	20.0	19.1		ug/L		96	70 - 130
Trichloroethene	20.0	18.0		ug/L		90	70 - 130
Trichlorofluoromethane	20.0	19.5		ug/L		97	70 - 130
Vinyl chloride	20.0	20.1		ug/L		100	70 - 130

Surrogate	*LCS %Recovery*	*LCS Qualifier*	*Limits*
4-Bromofluorobenzene	*101*		*70 - 130*
Dibromofluoromethane	*102*		*70 - 130*
Toluene-d8 (Surr)	*102*		*70 - 130*

Lab Sample ID: LCSD 360-96638/4
Matrix: Water
Analysis Batch: 96638

Client Sample ID: Lab Control Sample Dup
Prep Type: Total/NA

Analyte	Spike Added	LCSD Result	LCSD Qualifier	Unit	D	%Rec	%Rec. Limits	RPD	RPD Limit
1,1,1,2-Tetrachloroethane	20.0	19.8		ug/L		99	70 - 130	1	20
1,1,1-Trichloroethane	20.0	18.3		ug/L		92	70 - 130	3	20
1,1,2,2-Tetrachloroethane	20.0	19.7		ug/L		99	70 - 130	1	20
1,1,2-Trichloroethane	20.0	19.4		ug/L		97	70 - 130	4	20
1,1-Dichloroethane	20.0	19.6		ug/L		98	70 - 130	2	20
1,1-Dichloroethene	20.0	17.4		ug/L		87	70 - 130	3	20
1,1-Dichloropropene	20.0	18.1		ug/L		90	70 - 130	3	20
1,2,3-Trichlorobenzene	20.0	20.0		ug/L		100	70 - 130	1	20
1,2,3-Trichloropropane	20.0	20.1		ug/L		100	70 - 130	0	20
1,2,4-Trichlorobenzene	20.0	20.3		ug/L		101	70 - 130	0	20
1,2,4-Trimethylbenzene	20.0	19.4		ug/L		97	70 - 130	2	20
1,2-Dibromo-3-Chloropropane	20.0	19.9		ug/L		99	70 - 130	0	20
1,2-Dichlorobenzene	20.0	19.0		ug/L		95	70 - 130	2	20
1,2-Dichloroethane	20.0	19.9		ug/L		100	70 - 130	0	20
1,2-Dichloropropane	20.0	20.0		ug/L		100	70 - 130	1	20
1,3,5-Trimethylbenzene	20.0	19.4		ug/L		97	70 - 130	2	20
1,3-Dichlorobenzene	20.0	18.6		ug/L		93	70 - 130	1	20
1,3-Dichloropropane	20.0	19.8		ug/L		99	70 - 130	2	20
1,4-Dichlorobenzene	20.0	18.3		ug/L		91	70 - 130	2	20
1,4-Dioxane	200	285	*	ug/L		143	70 - 130	2	20
2,2-Dichloropropane	20.0	16.0		ug/L		80	70 - 130	3	20
2-Butanone (MEK)	200	162		ug/L		81	70 - 130	4	20
2-Chlorotoluene	20.0	19.0		ug/L		95	70 - 130	2	20
2-Hexanone	200	198		ug/L		99	70 - 130	1	20
4-Chlorotoluene	20.0	19.1		ug/L		95	70 - 130	0	20
4-Isopropyltoluene	20.0	19.8		ug/L		99	70 - 130	2	20
4-Methyl-2-pentanone (MIBK)	200	206		ug/L		103	70 - 130	0	20
Acetone	200	154		ug/L		77	70 - 130	1	20
Benzene	20.0	19.2		ug/L		96	70 - 130	1	20
Bromobenzene	20.0	18.0		ug/L		90	70 - 130	3	20
Bromoform	20.0	18.1		ug/L		91	70 - 130	2	20
Bromomethane	20.0	19.5		ug/L		97	70 - 130	7	20
Carbon disulfide	20.0	21.5		ug/L		108	70 - 130	6	20

Method: 8260C - Volatile Organic Compounds (GC/MS) (Continued)

Lab Sample ID: LCSD 360-96638/4
Matrix: Water
Analysis Batch: 96638

Client Sample ID: Lab Control Sample Dup
Prep Type: Total/NA

Analyte	Spike Added	LCSD Result	LCSD Qualifier	Unit	D	%Rec	%Rec. Limits	RPD	RPD Limit
Carbon tetrachloride	20.0	18.5		ug/L		92	70 - 130	3	20
Chlorobenzene	20.0	18.7		ug/L		94	70 - 130	2	20
Chlorobromomethane	20.0	19.5		ug/L		98	70 - 130	0	20
Chlorodibromomethane	20.0	19.4		ug/L		97	70 - 130	0	20
Chloroethane	20.0	20.2		ug/L		101	70 - 130	8	20
Chloroform	20.0	19.3		ug/L		97	70 - 130	1	20
Chloromethane	20.0	17.1		ug/L		85	70 - 130	6	20
cis-1,2-Dichloroethene	20.0	19.6		ug/L		98	70 - 130	1	20
cis-1,3-Dichloropropene	20.0	18.6		ug/L		93	70 - 130	1	20
Dibromomethane	20.0	19.9		ug/L		100	70 - 130	2	20
Dichlorobromomethane	20.0	19.6		ug/L		98	70 - 130	0	20
Dichlorodifluoromethane	20.0	15.1		ug/L		75	70 - 130	5	20
Ethyl ether	20.0	20.9		ug/L		104	70 - 130	1	20
Ethylbenzene	20.0	18.6		ug/L		93	70 - 130	3	20
Ethylene Dibromide	20.0	19.7		ug/L		99	70 - 130	2	20
Hexachlorobutadiene	20.0	18.1		ug/L		91	70 - 130	1	20
Isopropyl ether	20.0	19.9		ug/L		99	70 - 130	0	20
Isopropylbenzene	20.0	19.2		ug/L		96	70 - 130	2	20
m-Xylene & p-Xylene	40.0	36.8		ug/L		92	70 - 130	3	20
Methyl tert-butyl ether	20.0	20.2		ug/L		101	70 - 130	1	20
Methylene Chloride	20.0	20.0		ug/L		100	70 - 130	3	20
n-Butylbenzene	20.0	18.5		ug/L		93	70 - 130	4	20
N-Propylbenzene	20.0	19.4		ug/L		97	70 - 130	2	20
Naphthalene	20.0	20.8		ug/L		104	70 - 130	1	20
o-Xylene	20.0	19.0		ug/L		95	70 - 130	1	20
sec-Butylbenzene	20.0	19.2		ug/L		96	70 - 130	3	20
Styrene	20.0	19.0		ug/L		95	70 - 130	3	20
Tert-amyl methyl ether	20.0	19.4		ug/L		97	70 - 130	1	20
Tert-butyl ethyl ether	20.0	20.2		ug/L		101	70 - 130	1	20
tert-Butylbenzene	20.0	19.3		ug/L		96	70 - 130	3	20
Tetrachloroethene	20.0	18.9		ug/L		95	70 - 130	3	20
Tetrahydrofuran	200	212		ug/L		106	70 - 130	1	20
Toluene	20.0	18.4		ug/L		92	70 - 130	1	20
trans-1,2-Dichloroethene	20.0	18.8		ug/L		94	70 - 130	2	20
trans-1,3-Dichloropropene	20.0	19.1		ug/L		95	70 - 130	0	20
Trichloroethene	20.0	17.9		ug/L		90	70 - 130	1	20
Trichlorofluoromethane	20.0	18.4		ug/L		92	70 - 130	6	20
Vinyl chloride	20.0	18.9		ug/L		94	70 - 130	6	20

Surrogate	*LCSD %Recovery*	*LCSD Qualifier*	*Limits*
4-Bromofluorobenzene	*102*		*70 - 130*
Dibromofluoromethane	*102*		*70 - 130*
Toluene-d8 (Surr)	*100*		*70 - 130*

Lab Chronicle

Client: ERM-Northeast
Project/Site: IDS Wayland

TestAmerica Job ID: 360-43154-1

Client Sample ID: Drum-1-20121004-01 — Lab Sample ID: 360-43154-1

Date Collected: 10/04/12 08:00 — **Matrix: Water**
Date Received: 10/05/12 19:50

Prep Type	Batch Type	Batch Method	Run	Dilution Factor	Batch Number	Prepared or Analyzed	Analyst	Lab
Total/NA	Analysis	8260C		1	96638	10/16/12 09:50	TH	TAL WFD

Client Sample ID: Drum-2-20121004-01 — Lab Sample ID: 360-43154-2

Date Collected: 10/04/12 08:15 — **Matrix: Water**
Date Received: 10/05/12 19:50

Prep Type	Batch Type	Batch Method	Run	Dilution Factor	Batch Number	Prepared or Analyzed	Analyst	Lab
Total/NA	Analysis	8260C		1	96638	10/16/12 10:12	TH	TAL WFD

Client Sample ID: Drum-3-20121004-01 — Lab Sample ID: 360-43154-3

Date Collected: 10/04/12 08:30 — **Matrix: Water**
Date Received: 10/05/12 19:50

Prep Type	Batch Type	Batch Method	Run	Dilution Factor	Batch Number	Prepared or Analyzed	Analyst	Lab
Total/NA	Analysis	8260C		1	96638	10/16/12 10:34	TH	TAL WFD

Client Sample ID: Drum-4-20121004-01 — Lab Sample ID: 360-43154-4

Date Collected: 10/04/12 08:45 — **Matrix: Water**
Date Received: 10/05/12 19:50

Prep Type	Batch Type	Batch Method	Run	Dilution Factor	Batch Number	Prepared or Analyzed	Analyst	Lab
Total/NA	Analysis	8260C		1	96638	10/16/12 10:56	TH	TAL WFD

Client Sample ID: Drum-5-20121004-01 — Lab Sample ID: 360-43154-5

Date Collected: 10/04/12 09:00 — **Matrix: Water**
Date Received: 10/05/12 19:50

Prep Type	Batch Type	Batch Method	Run	Dilution Factor	Batch Number	Prepared or Analyzed	Analyst	Lab
Total/NA	Analysis	8260C		2	96638	10/16/12 11:17	TH	TAL WFD

Client Sample ID: Drum-6-20121004-01 — Lab Sample ID: 360-43154-6

Date Collected: 10/04/12 09:15 — **Matrix: Water**
Date Received: 10/05/12 19:50

Prep Type	Batch Type	Batch Method	Run	Dilution Factor	Batch Number	Prepared or Analyzed	Analyst	Lab
Total/NA	Analysis	8260C		1	96638	10/16/12 11:41	TH	TAL WFD

Client Sample ID: Dup-001-20121004-01 — Lab Sample ID: 360-43154-7

Date Collected: 10/04/12 12:00 — **Matrix: Water**
Date Received: 10/05/12 19:50

Prep Type	Batch Type	Batch Method	Run	Dilution Factor	Batch Number	Prepared or Analyzed	Analyst	Lab
Total/NA	Analysis	8260C		1	96638	10/16/12 12:03	TH	TAL WFD

Lab Chronicle

Client: ERM-Northeast
Project/Site: IDS Wayland

TestAmerica Job ID: 360-43154-1

Client Sample ID: Tripblank

Lab Sample ID: 360-43154-8

Date Collected: 10/04/12 08:00

Matrix: Water

Date Received: 10/05/12 19:50

Prep Type	Batch Type	Batch Method	Run	Dilution Factor	Batch Number	Prepared or Analyzed	Analyst	Lab
Total/NA	Analysis	8260C		1	96638	10/16/12 12:25	TH	TAL WFD

Laboratory References:

TAL WFD = TestAmerica Westfield, Westfield Executive Park, 53 Southampton Road, Westfield, MA 01085, TEL (413)572-4000

Certification Summary

Client: ERM-Northeast
Project/Site: IDS Wayland

TestAmerica Job ID: 360-43154-1

Laboratory: TestAmerica Westfield

All certifications held by this laboratory are listed. Not all certifications are applicable to this report.

Authority	Program	EPA Region	Certification ID	Expiration Date
Connecticut	State Program	1	PH-0494	09-30-14
Maine	State Program	1	MA00014	05-03-13
Massachusetts	State Program	1	M-MA014	06-30-13
New Hampshire	NELAC	1	2539	08-08-13
Rhode Island	State Program	1	LAO00057	12-30-12
Vermont	State Program	1	VT-10843	11-18-12

State Accreditation Matrix

Method Name	Description	Primary Accreditation	
		New Hampshire (NELAC)	Mass
180.1	Turbidity, Nephelometric	P	P
245.1	Mercury (CVAA)	NP/P	NP
300	Anions, Ion Chromatography	NP/P	NP/P
410.4	COD	NP	NP
524.2	Volatile Org Comp (GC/MS)(list upon request)	P	P
524.2	Trihalomethane compounds	P	P
608	Organochlorine Pest/PCBs (list upon request)	NP	NP
624	Volatile Org Comp (GC/MS)(list upon request)	NP	NP
625	Semivolatile Org Comp (GC/MS)(list upon request)	NP	NP
1010	Ignitability, Pensky-Martens Closed-Cup Method	SW	
1103.1	E.coli		ambient/source
3546	Microwave Extraction	SW	
5035	Closed System Purge and Trap	SW	
6020	Metals (ICP/MS) (list upon request)	NP	
10-107-06-2	Nitrogen, Total Kjeldahl	NP	NP
200.7 Rev 4.4	Metals (ICP)(list upon request)	NP/P	NP/P
200.8 Rev 5.4	Metals (ICP/MS) (list upon request)	NP/P	NP/P
3005A	Preparation, Total Recoverable or Dissolved Metals	NP/P	
3010A	Preparation, Total Metals	NP/P	
3020A	Preparation, Total Metals	NP/P	
3050B	Preparation, Metals	SW	
3510C	Liquid-Liquid Extraction (Separatory Funnel)	NP	
5030B	Purge and Trap	NP	
6010C	Metals (ICP)(list upon request)	NP/SW	
7196A	Chromium, Hexavalent	NP/SW	
7470A	Mercury (CVAA)	NP	
7471A	Mercury (CVAA)	SW	
8081B	Organochlorine Pesticides (GC)(list upon request)	NP/SW	
8082A	PCBs by Gas Chromatography(list upon request)	NP/SW	
8260C	Volatile Org Comp. (GC/MS)(list upon request)	NP/SW	
8270D	Semivolatile Comp.(GC/MS)(list upon request)	NP/SW	
9012A	Cyanide, Total and/or Amenable	NP/SW	
9030B	Sulfide, Distillation (Acid Soluble and Insoluble)	NP	
9045C	pH	SW	
CT ETPH	Conn - Ext. Total petroleum Hydrocarbons (GC)	NP/SW	
Enterolert	Enterococcus		ambient/source
L107041C	Nitrogen, Nitrate	NP	
L107-06-1B	Nitrogen Ammonia	NP	NP
L204001A CN	Cyanide, Total	P	NP/P
L210-001A	Phenolics, Total Recoverable	NP	NP
MA-EPH	Mass - Extractable Petroleum Hydrocarbons (GC)	NP/SW	
MAVPH	Mass - Volatile Petroleum Hydrocarbons (GC)	NP/SW	
SM 2320B	Alkalinity	NP/P	NP/P
SM 2340B	Total Hardness (as CaCO3) by calculation	NP/P	NP
SM 2510B	Conductivity, Specific Conductance	NP/P	NP/P
SM 2540C	Solids, Total Dissolved (TDS)	NP/P	NP/P
SM 2540D	Solids, Total Suspended (TSS)	NP	NP
SM 3500 CR D	Chromium, Hexavalent	NP	
SM 4500 Cl F	Chlorine, Residual		NP
SM 4500 H+ B	pH	NP/P	NP/P
SM 4500 NO2 B	Nitrogen, Nitrite	NP	P
SM 4500 P E	Phosphorus, Orthophosphate	NP/P	NP
SM 4500 P E	Phosphorus, Total	NP	NP
SM 4500 S2 D	Sulfide, Total	NP	
SM 5210B	BOD, 5-Day	NP	NP
SM 5310B	Organic Carbon, Total (TOC)	NP/P	NP
SM 9215E	Heterotrophic Plate Count (SimPlate)		P
SM 9222D	Coliforms, Fecal (Membrane Filter)		NP
SM 9223	Coliforms, Total, and E.Coli (Colilert-P/A)		P
SM 9223	Coliforms, Total, and E.Coli (Enumeration)		P

Not all organic compounds are accreditied under YNI
For methods with multiple compounds all compounds may not meet TNI criteria, a listing should be obtained from the laboratory

The lab carries additional accreditations with several states. This is the laboratories typcial listing but is subject to change based on the laboratories current certification standing.

Login Sample Receipt Checklist

Client: ERM-Northeast

Job Number: 360-43154-1

Login Number: 43154
List Number: 1
Creator: Kolb, Chris M

List Source: TestAmerica Westfield

Question	Answer	Comment
Radioactivity wasn't checked or is </= background as measured by a survey meter.	N/A	
The cooler's custody seal, if present, is intact.	True	
Sample custody seals, if present, are intact.	True	
The cooler or samples do not appear to have been compromised or tampered with.	True	
Samples were received on ice.	True	
Cooler Temperature is acceptable.	False	
Cooler Temperature is recorded.	True	
COC is present.	True	
COC is filled out in ink and legible.	True	
COC is filled out with all pertinent information.	True	
Is the Field Sampler's name present on COC?	True	
There are no discrepancies between the containers received and the COC.	True	
Samples are received within Holding Time.	True	
Sample containers have legible labels.	True	
Containers are not broken or leaking.	True	
Sample collection date/times are provided.	True	
Appropriate sample containers are used.	True	
Sample bottles are completely filled.	True	
Sample Preservation Verified.	True	
There is sufficient vol. for all requested analyses, incl. any requested MS/MSDs	True	
Containers requiring zero headspace have no headspace or bubble is <6mm (1/4").	True	
Multiphasic samples are not present.	True	
Samples do not require splitting or compositing.	True	
Residual Chlorine Checked.	N/A	

Chain of Custody Record

TestAmerica
THE LEADER IN ENVIRONMENTAL TESTING

Client Information	Sampler: Chris Cook	Lab PM:	Carrier Tracking No(s):	CQC No: 360-16286-6416.1
Client Contact: ~~Mr. Ethan Gyles~~ Jason Flattery	Phone: 617-519-3419	E-Mail:		Page: Page 1 of 2
Company: ERM-Northeast				Job #: 360-43154
Address: ~~15 Park Row West,~~ 1 Beacon St	Due Date Requested: Standard			
City: ~~Providence~~ Boston Ma. 5th Floor	TAT Requested (days):			
State, Zip: RI, 02903				
Phone: 617-646-7800	PO #:			
Email: ~~ethan.gyles@erm.com~~	WO #:			
Project Name: IDS Wayland	Project #: 0167058			
Site: Wayland Ma.	SSOW#:			

Analysis Requested

Sample Identification	Sample Date	Sample Time	Sample Type (C=comp, G=grab)	Matrix (W=water, S=solid, O=waste/oil, BT=Tissue, A=Air)	Field Filtered Sample (Yes or No)	Perform MS/MSD (Yes or No)	8260C - MRP List	8260C	Total Number of containers	Special Instructions/Note:
			Preservation Code:				A	N		
Drum-1-20121004-01	10/4/12	0800	G	Water			X		4	
Drum-2-20121004-01	↓	0815	↓	Water			X		4	
Drum-3-20121004-01		0830		Water			X		4	
Drum-4-20121004-01		0845		Water			X		4	
Drum-5-20121004-01		0900		Water			X		4	
Drum-6-20121004-01		0915		Water			X		4	
DUP-001-20121004-01	↓	1200	↓	Water			X		4	
Trip blank (Lab supplied)	—	—	—	Water			X		2	
				Solid						
				Solid						
				Solid						

Preservation Codes:

A - HCL	M - Hexane
B - NaOH	N - None
C - Zn Acetate	O - AsNaO2
D - Nitric Acid	P - Na2O4S
E - NaHSO4	Q - Na2SO3
F - MeOH	R - Na2S2SO3
G - Amchlor	S - H2SO4
H - Ascorbic Acid	T - TSP Dodecahydrate
I - Ice	U - Acetone
J - DI Water	V - MCAA
K - EDTA	W - ph 4-5
L - EDA	Z - other (specify)

Other:

Possible Hazard Identification
☐ Non-Hazard ☐ Flammable ☐ Skin Irritant ☐ Poison B ☐ Unknown ☐ Radiological

Sample Disposal (A fee may be assessed if samples are retained longer than 1 month)
☐ Return To Client ☐ Disposal By Lab ☐ Archive For _____ Months

Deliverable Requested: I, II, III, IV, Other (specify)

Special Instructions/QC Requirements:

Empty Kit Relinquished by: | Date: | Time: | Method of Shipment:

Relinquished by:	Date/Time:	Company	Received by:	Date/Time:	Company
	10/5/12 0700	ERM		10/5/12 10:07	TAL
Relinquished by:	10/5/12 1700	TAL	Received by:	10-5-12 1700	
Relinquished by:	10-5-12 1950		Received by:	10/5/12 1950	TA

Custody Seals Intact: Δ Yes Δ No | Custody Seal No.:

Cooler Temperature(s) °C and Other Remarks: 11.4 ICE

TestAmerica

THE LEADER IN ENVIRONMENTAL TESTING

ANALYTICAL REPORT

TestAmerica Laboratories, Inc.
TestAmerica Buffalo
10 Hazelwood Drive
Amherst, NY 14228-2298
Tel: (716)691-2600

TestAmerica Job ID: 480-31512-1
Client Project/Site: IDS Wayland

For:
ERM-Northeast
One Beacon Steet
5th Floor
Boston, Massachusetts 02108

Attn: Jason Flattery

Authorized for release by:
1/22/2013 4:34:39 PM
Brian Fischer
Project Manager II
brian.fischer@testamericainc.com

Designee for

Becky Mason
Project Manager II
becky.mason@testamericainc.com

LINKS

Review your project results through TotalAccess

Have a Question? Ask The Expert

Visit us at: www.testamericainc.com

The test results in this report meet all 2003 NELAC and 2009 TNI requirements for accredited parameters, exceptions are noted in this report. This report may not be reproduced except in full, and with written approval from the laboratory. For questions please contact the Project Manager at the e-mail address or telephone number listed on this page.

This report has been electronically signed and authorized by the signatory. Electronic signature is intended to be the legally binding equivalent of a traditionally handwritten signature.

Results relate only to the items tested and the sample(s) as received by the laboratory.

Table of Contents

Cover Page 1
Table of Contents 2
Definitions/Glossary 3
Case Narrative 4
Detection Summary 6
Client Sample Results 7
Surrogate Summary 21
QC Sample Results 22
QC Association Summary 32
Lab Chronicle 33
Certification Summary 35
Method Summary 36
Sample Summary 37
Receipt Checklists 38
Chain of Custody 39

Qualifiers

GC/MS VOA

Qualifier	Qualifier Description
*	LCS or LCSD exceeds the control limits

Glossary

Abbreviation	These commonly used abbreviations may or may not be present in this report.
☼	Listed under the "D" column to designate that the result is reported on a dry weight basis
%R	Percent Recovery
CNF	Contains no Free Liquid
DER	Duplicate error ratio (normalized absolute difference)
DL, RA, RE, IN	Indicates a Dilution, Reanalysis, Re-extraction, or additional Initial metals/anion analysis of the sample
DLC	Decision level concentration
EDL	Estimated Detection Limit
EPA	United States Environmental Protection Agency
MDA	Minimum detectable activity
MDC	Minimum detectable concentration
MDL	Method Detection Limit
ML	Minimum Level (Dioxin)
ND	Not detected at the reporting limit (or MDL or EDL if shown)
PQL	Practical Quantitation Limit
QC	Quality Control
RER	Relative error ratio
RL	Reporting Limit or Requested Limit (Radiochemistry)
RPD	Relative Percent Difference, a measure of the relative difference between two points
TEF	Toxicity Equivalent Factor (Dioxin)
TEQ	Toxicity Equivalent Quotient (Dioxin)

Job ID: 480-31512-1

Laboratory: TestAmerica Buffalo

Narrative

Job Narrative
480-31512-1

With the exceptions noted as flags or footnotes, standard analytical protocols were followed in the analysis of the samples and no problems were encountered or anomalies observed. In addition all laboratory quality control samples were within established control limits, with any exceptions noted below. Each sample was analyzed to achieve the lowest possible reporting limit within the constraints of the method. In some cases, due to interference or analytes present at high concentrations, samples were diluted. For diluted samples, the reporting limits are adjusted relative to the dilution required.

Calculations are performed before rounding to avoid round-off errors in calculated results.

All holding times were met and proper preservation noted for the methods performed on these samples, unless otherwise detailed in the individual sections below.

TestAmerica's Reporting Limits (RLs) for this report may not always meet client specified method reporting limits due to various reasons such as methodology, dilutions, matrix or moisture content (soils). TestAmerica's pivot table EDD documents which compound(s) exceed certain regulatory standards. If not included with your deliverables, please contact your Project Manager about the availability of this EDD for your report.

Receipt
The samples were received on 1/12/2013; the samples arrived in good condition, properly preserved and on ice. The temperature of the coolers at receipt was 1.8°C.

Note: All samples that require thermal preservation are considered acceptable if the arrival temperature is within the method's specified temperature range or for general analysis, ranging from 6°C to just above the freezing temperature of water. Samples that are hand delivered, immediately following collection, may not meet these criteria; however, they will be considered acceptable according to NELAC and State standards, if there is evidence that the chilling process has begun, such as stored and transported to the laboratory on ice.

The sample(s) were preserved via freezing on 01/12/13 at 1200: This is within the 48 hour timeframe required by the method.

GC/MS VOA
Per question G on the MassDEP Analytical Protocol Certification Form, TestAmerica's routine reporting limits do not achieve the CAM reporting limits specified in this CAM protocol(s) for 1,2-Dibromo-3-Chloropropane, Carbon Disulfide, Isopropyl Ether, Naphthalene, tert-Butyl Ethyl Ether, tert-Amyl Methyl Ether, & Tetrahydrofuran.

Method(s) 8260C: The continuing calibration verification (CCV) for 1,4-Dioxane associated with batch 99400 recovered above the MCP upper control limit. MCP protocol allows for 20% of the target compounds to be outside the 20% difference but not over 40% difference.

Method(s) 8260C: The laboratory control sample (LCS) and / or the laboratory control sample duplicate (LCSD) for batch 99400 and 99480 exceeded control limits for the following analytes: 2-Butanone. This is due to the coelution with Ethyl Acetate in the spike solution.

Method(s) 8260C: The laboratory control sample (LCS) and / or the laboratory control sample duplicate (LCSD) for batch 99400 exceeded control limits for the following analytes: 1,4-Dioxane. MCP protocol allows for 10% of the target compounds to be outside of the limits provided the recoveries are over 10%.

Method(s) 8260C: The continuing calibration verification (CCV) for Chloroethane associated with analytical batch 99480 recovered outside MCP control limits. MCP protocol allows for 20% of the target compounds to be outside the 20% difference but not over the 40% difference and 60% difference for difficult analytes.

Method(s) 8260C: The laboratory control sample (LCS) for batch 99480 exceeded control limits for the following analytes: Bromomethane. MCP protocol allows for 10% of the target compounds to be outside of the limits provided the recoveries are over 10%.

No other analytical or quality issues were noted.

MassDEP Analytical Protocol Certification Form

Laboratory Name: **TestAmerica Buffalo** Project #: **480-31512-1**

Project Location: **Raytheon - Wayland** RTN:

This form provides certifications for the following data set: list Laboratory Sample ID Number(s):

1 thru 8

Matrices: [x] Groundwater/Surface Water [x] Soil/Sediment [ ] Drinking Water [ ] Air [ ] Other:

CAM Protocols (check all that apply below):

8260 VOC CAM II A [x]	7470/7471 Hg CAM III B [ ]	Mass DEP VPH CAM IV A [ ]	8081 Pesticides CAM V B [ ]	7196 Hex Cr CAM VI B [ ]	Mass DEP APH CAM IX A [ ]
8270 SVOC CAM II B [ ]	7010 Metals CAM III C [ ]	Mass DEP EPH CAM IV B [ ]	8151 Herbicides CAM V C [ ]	8330 Explosives CAM VIII A [ ]	TO-15 VOC CAM IX B [ ]
6010 Metals CAM III A [ ]	6020 Metals CAM III D [ ]	8082 PCB CAM V A [ ]	9014 Total Cyanide/PAC CAM VI A [ ]	6860 Perchlorate CAM VIII B [ ]	

Affirmative Responses to Questions A through F are required for "Presumptive Certainty" status

A	Were all samples received in a condition consistent with those described on the Chain-of-Custody, properly preserved (including temperature) in the field or laboratory, and prepared/analyzed within method holding time.	[x] Yes [ ] No
B	Were the analytical method(s) and all associated QC requirements specified in the selected CAM protocol(s) followed?	[x] Yes [ ] No
C	Were all required corrective actions and analytical response actions specified in the selected CAM protocol(s) implemented for all identified performance standard non-conformances?	[x] Yes [ ] No
D	Does the laboratory report comply with all the reporting requirements specified in CAM VII A, "Quality Assurance and Quality Control Guidelines for the Acquisition and Reporting of Analytical Data"?	[x] Yes [ ] No
E	a. VPH, EPH and APH Methods only: Was each method conducted without significant modification(s)? (Refer to the individual method(s) for a list of significant modifications). b. APH and TO-15 Methods only: Was the complete analyte list reported for each method?	[ ] Yes [ ] No [ ] Yes [ ] No
F	Were all applicable CAM protocol QC and performance standard non-conformances identified and evaluated in a laboratory narrative (including all "No" responses to Questions A through E)?	[x] Yes [ ] No

Responses to Questions G, H and I below are required for "Presumptive Certainty" status

G	Were the reporting limits at or below all CAM reporting limits specified in the selected CAM protocol(s)?	[ ] Yes [x] No[1]

***Data User Note:* Data that achieve "Presumptive Certainty" status may not necessarily meet the data usability and representativeness requirements described in 310 CMR 40. 1056 (2)(k) and WCS-07-350**

H	Were **all** QC performance standards specified in the CAM protocol(s) achieved?	[ ] Yes [x] No[1]
I	Were results reported for the complete analyte list specified in the selected CAM protocol(s) ?	[ ] Yes [x] No[1]

[1] All negative responses must be addressed in an attached laboratory narrative.

I, the undersigned, attest under the pains and penalties of perjury that, based upon my personal inquiry of those responsible for obtaining the information, the material contained in this analytical report is, to the best of my knowledge and belief, is accurate and complete.

Signature: Position: Project Manager

Printed Name: Brian J. Fischer Date: 1/22/13 0:00

Detection Summary

Client: ERM-Northeast
Project/Site: IDS Wayland

TestAmerica Job ID: 480-31512-1

Client Sample ID: MW-1027-20130111-01 — Lab Sample ID: 480-31512-1

No Detections

Client Sample ID: MW-1028-20130111-01 — Lab Sample ID: 480-31512-2

Analyte	Result	Qualifier	RL	MDL	Unit	Dil Fac	D	Method	Prep Type
4-Isopropyltoluene	1.3		1.0		ug/L	1		8260C	Total/NA
Naphthalene	9.1		5.0		ug/L	1		8260C	Total/NA

Client Sample ID: MW-1033-20130111-01 — Lab Sample ID: 480-31512-3

Analyte	Result	Qualifier	RL	MDL	Unit	Dil Fac	D	Method	Prep Type
1,1,1-Trichloroethane	1.0		1.0		ug/L	1		8260C	Total/NA
Naphthalene	5.1		5.0		ug/L	1		8260C	Total/NA
Trichloroethene	2.8		1.0		ug/L	1		8260C	Total/NA

Client Sample ID: MW-1034-20130111-01 — Lab Sample ID: 480-31512-4

Analyte	Result	Qualifier	RL	MDL	Unit	Dil Fac	D	Method	Prep Type
1,1,1-Trichloroethane	2.2		1.0		ug/L	1		8260C	Total/NA
Naphthalene	5.6		5.0		ug/L	1		8260C	Total/NA
Trichloroethene	6.8		1.0		ug/L	1		8260C	Total/NA

Client Sample ID: DUP-001-20130111-01 — Lab Sample ID: 480-31512-5

Analyte	Result	Qualifier	RL	MDL	Unit	Dil Fac	D	Method	Prep Type
1,1,1-Trichloroethane	2.1		1.0		ug/L	1		8260C	Total/NA
Naphthalene	7.4		5.0		ug/L	1		8260C	Total/NA
Trichloroethene	6.6		1.0		ug/L	1		8260C	Total/NA

Client Sample ID: MW-1004-20130111-01 — Lab Sample ID: 480-31512-6

No Detections

Client Sample ID: MW-1008-20130111-01 — Lab Sample ID: 480-31512-7

No Detections

Client Sample ID: TB-001-2013111-01 — Lab Sample ID: 480-31512-8

No Detections

Client: ERM-Northeast
Project/Site: IDS Wayland

TestAmerica Job ID: 480-31512-1

Client Sample ID: MW-1027-20130111-01
Date Collected: 01/11/13 10:15
Date Received: 01/12/13 10:15

Lab Sample ID: 480-31512-1
Matrix: Water

Method: 8260C - Volatile Organic Compounds (GC/MS)

Analyte	Result	Qualifier	RL	MDL	Unit	D	Prepared	Analyzed	Dil Fac
1,1,1,2-Tetrachloroethane	ND		1.0		ug/L			01/14/13 20:10	1
1,1,1-Trichloroethane	ND		1.0		ug/L			01/14/13 20:10	1
1,1,2,2-Tetrachloroethane	ND		0.50		ug/L			01/14/13 20:10	1
1,1,2-Trichloroethane	ND		1.0		ug/L			01/14/13 20:10	1
1,1-Dichloroethane	ND		1.0		ug/L			01/14/13 20:10	1
1,1-Dichloroethene	ND		1.0		ug/L			01/14/13 20:10	1
1,1-Dichloropropene	ND		1.0		ug/L			01/14/13 20:10	1
1,2,3-Trichlorobenzene	ND		1.0		ug/L			01/14/13 20:10	1
1,2,3-Trichloropropane	ND		1.0		ug/L			01/14/13 20:10	1
1,2,4-Trichlorobenzene	ND		1.0		ug/L			01/14/13 20:10	1
1,2,4-Trimethylbenzene	ND		1.0		ug/L			01/14/13 20:10	1
1,2-Dibromo-3-Chloropropane	ND		5.0		ug/L			01/14/13 20:10	1
1,2-Dichlorobenzene	ND		1.0		ug/L			01/14/13 20:10	1
1,2-Dichloroethane	ND		1.0		ug/L			01/14/13 20:10	1
1,2-Dichloropropane	ND		1.0		ug/L			01/14/13 20:10	1
1,3,5-Trimethylbenzene	ND		1.0		ug/L			01/14/13 20:10	1
1,3-Dichlorobenzene	ND		1.0		ug/L			01/14/13 20:10	1
1,3-Dichloropropane	ND		1.0		ug/L			01/14/13 20:10	1
1,4-Dichlorobenzene	ND		1.0		ug/L			01/14/13 20:10	1
1,4-Dioxane	ND	*	50		ug/L			01/14/13 20:10	1
2,2-Dichloropropane	ND		1.0		ug/L			01/14/13 20:10	1
2-Butanone (MEK)	ND	*	10		ug/L			01/14/13 20:10	1
2-Chlorotoluene	ND		1.0		ug/L			01/14/13 20:10	1
2-Hexanone	ND		10		ug/L			01/14/13 20:10	1
4-Chlorotoluene	ND		1.0		ug/L			01/14/13 20:10	1
4-Isopropyltoluene	ND		1.0		ug/L			01/14/13 20:10	1
4-Methyl-2-pentanone (MIBK)	ND		10		ug/L			01/14/13 20:10	1
Acetone	ND		50		ug/L			01/14/13 20:10	1
Benzene	ND		1.0		ug/L			01/14/13 20:10	1
Bromobenzene	ND		1.0		ug/L			01/14/13 20:10	1
Bromoform	ND		1.0		ug/L			01/14/13 20:10	1
Bromomethane	ND		2.0		ug/L			01/14/13 20:10	1
Carbon disulfide	ND		10		ug/L			01/14/13 20:10	1
Carbon tetrachloride	ND		1.0		ug/L			01/14/13 20:10	1
Chlorobenzene	ND		1.0		ug/L			01/14/13 20:10	1
Chlorobromomethane	ND		1.0		ug/L			01/14/13 20:10	1
Chlorodibromomethane	ND		0.50		ug/L			01/14/13 20:10	1
Chloroethane	ND		2.0		ug/L			01/14/13 20:10	1
Chloroform	ND		1.0		ug/L			01/14/13 20:10	1
Chloromethane	ND		2.0		ug/L			01/14/13 20:10	1
cis-1,2-Dichloroethene	ND		1.0		ug/L			01/14/13 20:10	1
cis-1,3-Dichloropropene	ND		0.40		ug/L			01/14/13 20:10	1
Dichlorobromomethane	ND		0.50		ug/L			01/14/13 20:10	1
Dichlorodifluoromethane	ND		1.0		ug/L			01/14/13 20:10	1
Ethyl ether	ND		1.0		ug/L			01/14/13 20:10	1
Ethylbenzene	ND		1.0		ug/L			01/14/13 20:10	1
Ethylene Dibromide	ND		1.0		ug/L			01/14/13 20:10	1
Hexachlorobutadiene	ND		0.40		ug/L			01/14/13 20:10	1
Isopropyl ether	ND		10		ug/L			01/14/13 20:10	1

Client Sample ID: MW-1027-20130111-01

Lab Sample ID: 480-31512-1

Date Collected: 01/11/13 10:15

Matrix: Water

Date Received: 01/12/13 10:15

Method: 8260C - Volatile Organic Compounds (GC/MS) (Continued)

Analyte	Result	Qualifier	RL	MDL	Unit	D	Prepared	Analyzed	Dil Fac
Isopropylbenzene	ND		1.0		ug/L			01/14/13 20:10	1
Methyl tert-butyl ether	ND		1.0		ug/L			01/14/13 20:10	1
Methylene Chloride	ND		1.0		ug/L			01/14/13 20:10	1
m-Xylene & p-Xylene	ND		2.0		ug/L			01/14/13 20:10	1
Naphthalene	ND		5.0		ug/L			01/14/13 20:10	1
n-Butylbenzene	ND		1.0		ug/L			01/14/13 20:10	1
N-Propylbenzene	ND		1.0		ug/L			01/14/13 20:10	1
o-Xylene	ND		1.0		ug/L			01/14/13 20:10	1
sec-Butylbenzene	ND		1.0		ug/L			01/14/13 20:10	1
Styrene	ND		1.0		ug/L			01/14/13 20:10	1
Tert-amyl methyl ether	ND		5.0		ug/L			01/14/13 20:10	1
Tert-butyl ethyl ether	ND		5.0		ug/L			01/14/13 20:10	1
tert-Butylbenzene	ND		1.0		ug/L			01/14/13 20:10	1
Tetrachloroethene	ND		1.0		ug/L			01/14/13 20:10	1
Tetrahydrofuran	ND		10		ug/L			01/14/13 20:10	1
Toluene	ND		1.0		ug/L			01/14/13 20:10	1
trans-1,2-Dichloroethene	ND		1.0		ug/L			01/14/13 20:10	1
trans-1,3-Dichloropropene	ND		0.40		ug/L			01/14/13 20:10	1
Trichloroethene	ND		1.0		ug/L			01/14/13 20:10	1
Trichlorofluoromethane	ND		1.0		ug/L			01/14/13 20:10	1
Vinyl chloride	ND		0.50		ug/L			01/14/13 20:10	1
Dibromomethane	ND		1.0		ug/L			01/14/13 20:10	1

Surrogate	*%Recovery*	*Qualifier*	*Limits*	*Prepared*	*Analyzed*	*Dil Fac*
Toluene-d8 (Surr)	*118*		*70 - 130*		*01/14/13 20:10*	*1*
1,2-Dichloroethane-d4 (Surr)	*111*		*70 - 130*		*01/14/13 20:10*	*1*
4-Bromofluorobenzene (Surr)	*115*		*70 - 130*		*01/14/13 20:10*	*1*

Client Sample ID: MW-1028-20130111-01

Lab Sample ID: 480-31512-2

Date Collected: 01/11/13 10:22

Matrix: Water

Date Received: 01/12/13 10:15

Method: 8260C - Volatile Organic Compounds (GC/MS)

Analyte	Result	Qualifier	RL	MDL	Unit	D	Prepared	Analyzed	Dil Fac
1,1,1,2-Tetrachloroethane	ND		1.0		ug/L			01/14/13 20:33	1
1,1,1-Trichloroethane	ND		1.0		ug/L			01/14/13 20:33	1
1,1,2,2-Tetrachloroethane	ND		0.50		ug/L			01/14/13 20:33	1
1,1,2-Trichloroethane	ND		1.0		ug/L			01/14/13 20:33	1
1,1-Dichloroethane	ND		1.0		ug/L			01/14/13 20:33	1
1,1-Dichloroethene	ND		1.0		ug/L			01/14/13 20:33	1
1,1-Dichloropropene	ND		1.0		ug/L			01/14/13 20:33	1
1,2,3-Trichlorobenzene	ND		1.0		ug/L			01/14/13 20:33	1
1,2,3-Trichloropropane	ND		1.0		ug/L			01/14/13 20:33	1
1,2,4-Trichlorobenzene	ND		1.0		ug/L			01/14/13 20:33	1
1,2,4-Trimethylbenzene	ND		1.0		ug/L			01/14/13 20:33	1
1,2-Dibromo-3-Chloropropane	ND		5.0		ug/L			01/14/13 20:33	1
1,2-Dichlorobenzene	ND		1.0		ug/L			01/14/13 20:33	1
1,2-Dichloroethane	ND		1.0		ug/L			01/14/13 20:33	1
1,2-Dichloropropane	ND		1.0		ug/L			01/14/13 20:33	1
1,3,5-Trimethylbenzene	ND		1.0		ug/L			01/14/13 20:33	1

Client: ERM-Northeast
Project/Site: IDS Wayland

TestAmerica Job ID: 480-31512-1

Client Sample ID: MW-1028-20130111-01
Date Collected: 01/11/13 10:22
Date Received: 01/12/13 10:15

Lab Sample ID: 480-31512-2
Matrix: Water

Method: 8260C - Volatile Organic Compounds (GC/MS) (Continued)

Analyte	Result	Qualifier	RL	MDL	Unit	D	Prepared	Analyzed	Dil Fac
1,3-Dichlorobenzene	ND		1.0		ug/L			01/14/13 20:33	1
1,3-Dichloropropane	ND		1.0		ug/L			01/14/13 20:33	1
1,4-Dichlorobenzene	ND		1.0		ug/L			01/14/13 20:33	1
1,4-Dioxane	ND	*	50		ug/L			01/14/13 20:33	1
2,2-Dichloropropane	ND		1.0		ug/L			01/14/13 20:33	1
2-Butanone (MEK)	ND	*	10		ug/L			01/14/13 20:33	1
2-Chlorotoluene	ND		1.0		ug/L			01/14/13 20:33	1
2-Hexanone	ND		10		ug/L			01/14/13 20:33	1
4-Chlorotoluene	ND		1.0		ug/L			01/14/13 20:33	1
4-Isopropyltoluene	**1.3**		1.0		ug/L			01/14/13 20:33	1
4-Methyl-2-pentanone (MIBK)	ND		10		ug/L			01/14/13 20:33	1
Acetone	ND		50		ug/L			01/14/13 20:33	1
Benzene	ND		1.0		ug/L			01/14/13 20:33	1
Bromobenzene	ND		1.0		ug/L			01/14/13 20:33	1
Bromoform	ND		1.0		ug/L			01/14/13 20:33	1
Bromomethane	ND		2.0		ug/L			01/14/13 20:33	1
Carbon disulfide	ND		10		ug/L			01/14/13 20:33	1
Carbon tetrachloride	ND		1.0		ug/L			01/14/13 20:33	1
Chlorobenzene	ND		1.0		ug/L			01/14/13 20:33	1
Chlorobromomethane	ND		1.0		ug/L			01/14/13 20:33	1
Chlorodibromomethane	ND		0.50		ug/L			01/14/13 20:33	1
Chloroethane	ND		2.0		ug/L			01/14/13 20:33	1
Chloroform	ND		1.0		ug/L			01/14/13 20:33	1
Chloromethane	ND		2.0		ug/L			01/14/13 20:33	1
cis-1,2-Dichloroethene	ND		1.0		ug/L			01/14/13 20:33	1
cis-1,3-Dichloropropene	ND		0.40		ug/L			01/14/13 20:33	1
Dichlorobromomethane	ND		0.50		ug/L			01/14/13 20:33	1
Dichlorodifluoromethane	ND		1.0		ug/L			01/14/13 20:33	1
Ethyl ether	ND		1.0		ug/L			01/14/13 20:33	1
Ethylbenzene	ND		1.0		ug/L			01/14/13 20:33	1
Ethylene Dibromide	ND		1.0		ug/L			01/14/13 20:33	1
Hexachlorobutadiene	ND		0.40		ug/L			01/14/13 20:33	1
Isopropyl ether	ND		10		ug/L			01/14/13 20:33	1
Isopropylbenzene	ND		1.0		ug/L			01/14/13 20:33	1
Methyl tert-butyl ether	ND		1.0		ug/L			01/14/13 20:33	1
Methylene Chloride	ND		1.0		ug/L			01/14/13 20:33	1
m-Xylene & p-Xylene	ND		2.0		ug/L			01/14/13 20:33	1
Naphthalene	**9.1**		5.0		ug/L			01/14/13 20:33	1
n-Butylbenzene	ND		1.0		ug/L			01/14/13 20:33	1
N-Propylbenzene	ND		1.0		ug/L			01/14/13 20:33	1
o-Xylene	ND		1.0		ug/L			01/14/13 20:33	1
sec-Butylbenzene	ND		1.0		ug/L			01/14/13 20:33	1
Styrene	ND		1.0		ug/L			01/14/13 20:33	1
Tert-amyl methyl ether	ND		5.0		ug/L			01/14/13 20:33	1
Tert-butyl ethyl ether	ND		5.0		ug/L			01/14/13 20:33	1
tert-Butylbenzene	ND		1.0		ug/L			01/14/13 20:33	1
Tetrachloroethene	ND		1.0		ug/L			01/14/13 20:33	1
Tetrahydrofuran	ND		10		ug/L			01/14/13 20:33	1
Toluene	ND		1.0		ug/L			01/14/13 20:33	1

Client Sample ID: MW-1028-20130111-01

Lab Sample ID: 480-31512-2

Date Collected: 01/11/13 10:22

Matrix: Water

Date Received: 01/12/13 10:15

Method: 8260C - Volatile Organic Compounds (GC/MS) (Continued)

Analyte	Result	Qualifier	RL	MDL	Unit	D	Prepared	Analyzed	Dil Fac
trans-1,2-Dichloroethene	ND		1.0		ug/L			01/14/13 20:33	1
trans-1,3-Dichloropropene	ND		0.40		ug/L			01/14/13 20:33	1
Trichloroethene	ND		1.0		ug/L			01/14/13 20:33	1
Trichlorofluoromethane	ND		1.0		ug/L			01/14/13 20:33	1
Vinyl chloride	ND		0.50		ug/L			01/14/13 20:33	1
Dibromomethane	ND		1.0		ug/L			01/14/13 20:33	1

Surrogate	*%Recovery*	*Qualifier*	*Limits*	*Prepared*	*Analyzed*	*Dil Fac*
Toluene-d8 (Surr)	*119*		*70 - 130*		*01/14/13 20:33*	*1*
1,2-Dichloroethane-d4 (Surr)	*107*		*70 - 130*		*01/14/13 20:33*	*1*
4-Bromofluorobenzene (Surr)	*113*		*70 - 130*		*01/14/13 20:33*	*1*

Client Sample ID: MW-1033-20130111-01

Lab Sample ID: 480-31512-3

Date Collected: 01/11/13 10:28

Matrix: Water

Date Received: 01/12/13 10:15

Method: 8260C - Volatile Organic Compounds (GC/MS)

Analyte	Result	Qualifier	RL	MDL	Unit	D	Prepared	Analyzed	Dil Fac
1,1,1,2-Tetrachloroethane	ND		1.0		ug/L			01/14/13 20:57	1
1,1,1-Trichloroethane	**1.0**		1.0		ug/L			01/14/13 20:57	1
1,1,2,2-Tetrachloroethane	ND		0.50		ug/L			01/14/13 20:57	1
1,1,2-Trichloroethane	ND		1.0		ug/L			01/14/13 20:57	1
1,1-Dichloroethane	ND		1.0		ug/L			01/14/13 20:57	1
1,1-Dichloroethene	ND		1.0		ug/L			01/14/13 20:57	1
1,1-Dichloropropene	ND		1.0		ug/L			01/14/13 20:57	1
1,2,3-Trichlorobenzene	ND		1.0		ug/L			01/14/13 20:57	1
1,2,3-Trichloropropane	ND		1.0		ug/L			01/14/13 20:57	1
1,2,4-Trichlorobenzene	ND		1.0		ug/L			01/14/13 20:57	1
1,2,4-Trimethylbenzene	ND		1.0		ug/L			01/14/13 20:57	1
1,2-Dibromo-3-Chloropropane	ND		5.0		ug/L			01/14/13 20:57	1
1,2-Dichlorobenzene	ND		1.0		ug/L			01/14/13 20:57	1
1,2-Dichloroethane	ND		1.0		ug/L			01/14/13 20:57	1
1,2-Dichloropropane	ND		1.0		ug/L			01/14/13 20:57	1
1,3,5-Trimethylbenzene	ND		1.0		ug/L			01/14/13 20:57	1
1,3-Dichlorobenzene	ND		1.0		ug/L			01/14/13 20:57	1
1,3-Dichloropropane	ND		1.0		ug/L			01/14/13 20:57	1
1,4-Dichlorobenzene	ND		1.0		ug/L			01/14/13 20:57	1
1,4-Dioxane	ND	*	50		ug/L			01/14/13 20:57	1
2,2-Dichloropropane	ND		1.0		ug/L			01/14/13 20:57	1
2-Butanone (MEK)	ND	*	10		ug/L			01/14/13 20:57	1
2-Chlorotoluene	ND		1.0		ug/L			01/14/13 20:57	1
2-Hexanone	ND		10		ug/L			01/14/13 20:57	1
4-Chlorotoluene	ND		1.0		ug/L			01/14/13 20:57	1
4-Isopropyltoluene	ND		1.0		ug/L			01/14/13 20:57	1
4-Methyl-2-pentanone (MIBK)	ND		10		ug/L			01/14/13 20:57	1
Acetone	ND		50		ug/L			01/14/13 20:57	1
Benzene	ND		1.0		ug/L			01/14/13 20:57	1
Bromobenzene	ND		1.0		ug/L			01/14/13 20:57	1
Bromoform	ND		1.0		ug/L			01/14/13 20:57	1
Bromomethane	ND		2.0		ug/L			01/14/13 20:57	1

Client Sample ID: MW-1033-20130111-01
Date Collected: 01/11/13 10:28
Date Received: 01/12/13 10:15

Lab Sample ID: 480-31512-3
Matrix: Water

Method: 8260C - Volatile Organic Compounds (GC/MS) (Continued)

Analyte	Result	Qualifier	RL	MDL	Unit	D	Prepared	Analyzed	Dil Fac
Carbon disulfide	ND		10		ug/L			01/14/13 20:57	1
Carbon tetrachloride	ND		1.0		ug/L			01/14/13 20:57	1
Chlorobenzene	ND		1.0		ug/L			01/14/13 20:57	1
Chlorobromomethane	ND		1.0		ug/L			01/14/13 20:57	1
Chlorodibromomethane	ND		0.50		ug/L			01/14/13 20:57	1
Chloroethane	ND		2.0		ug/L			01/14/13 20:57	1
Chloroform	ND		1.0		ug/L			01/14/13 20:57	1
Chloromethane	ND		2.0		ug/L			01/14/13 20:57	1
cis-1,2-Dichloroethene	ND		1.0		ug/L			01/14/13 20:57	1
cis-1,3-Dichloropropene	ND		0.40		ug/L			01/14/13 20:57	1
Dichlorobromomethane	ND		0.50		ug/L			01/14/13 20:57	1
Dichlorodifluoromethane	ND		1.0		ug/L			01/14/13 20:57	1
Ethyl ether	ND		1.0		ug/L			01/14/13 20:57	1
Ethylbenzene	ND		1.0		ug/L			01/14/13 20:57	1
Ethylene Dibromide	ND		1.0		ug/L			01/14/13 20:57	1
Hexachlorobutadiene	ND		0.40		ug/L			01/14/13 20:57	1
Isopropyl ether	ND		10		ug/L			01/14/13 20:57	1
Isopropylbenzene	ND		1.0		ug/L			01/14/13 20:57	1
Methyl tert-butyl ether	ND		1.0		ug/L			01/14/13 20:57	1
Methylene Chloride	ND		1.0		ug/L			01/14/13 20:57	1
m-Xylene & p-Xylene	ND		2.0		ug/L			01/14/13 20:57	1
Naphthalene	**5.1**		5.0		ug/L			01/14/13 20:57	1
n-Butylbenzene	ND		1.0		ug/L			01/14/13 20:57	1
N-Propylbenzene	ND		1.0		ug/L			01/14/13 20:57	1
o-Xylene	ND		1.0		ug/L			01/14/13 20:57	1
sec-Butylbenzene	ND		1.0		ug/L			01/14/13 20:57	1
Styrene	ND		1.0		ug/L			01/14/13 20:57	1
Tert-amyl methyl ether	ND		5.0		ug/L			01/14/13 20:57	1
Tert-butyl ethyl ether	ND		5.0		ug/L			01/14/13 20:57	1
tert-Butylbenzene	ND		1.0		ug/L			01/14/13 20:57	1
Tetrachloroethene	ND		1.0		ug/L			01/14/13 20:57	1
Tetrahydrofuran	ND		10		ug/L			01/14/13 20:57	1
Toluene	ND		1.0		ug/L			01/14/13 20:57	1
trans-1,2-Dichloroethene	ND		1.0		ug/L			01/14/13 20:57	1
trans-1,3-Dichloropropene	ND		0.40		ug/L			01/14/13 20:57	1
Trichloroethene	**2.8**		1.0		ug/L			01/14/13 20:57	1
Trichlorofluoromethane	ND		1.0		ug/L			01/14/13 20:57	1
Vinyl chloride	ND		0.50		ug/L			01/14/13 20:57	1
Dibromomethane	ND		1.0		ug/L			01/14/13 20:57	1

Surrogate	*%Recovery*	*Qualifier*	*Limits*	*Prepared*	*Analyzed*	*Dil Fac*
Toluene-d8 (Surr)	*120*		*70 - 130*		*01/14/13 20:57*	*1*
1,2-Dichloroethane-d4 (Surr)	*110*		*70 - 130*		*01/14/13 20:57*	*1*
4-Bromofluorobenzene (Surr)	*115*		*70 - 130*		*01/14/13 20:57*	*1*

Client Sample Results

Client: ERM-Northeast
Project/Site: IDS Wayland

TestAmerica Job ID: 480-31512-1

Client Sample ID: MW-1034-20130111-01

Lab Sample ID: 480-31512-4

Date Collected: 01/11/13 10:00
Date Received: 01/12/13 10:15

Matrix: Water

Method: 8260C - Volatile Organic Compounds (GC/MS)

Analyte	Result	Qualifier	RL	MDL	Unit	D	Prepared	Analyzed	Dil Fac
1,1,1,2-Tetrachloroethane	ND		1.0		ug/L			01/14/13 21:21	1
1,1,1-Trichloroethane	**2.2**		1.0		ug/L			01/14/13 21:21	1
1,1,2,2-Tetrachloroethane	ND		0.50		ug/L			01/14/13 21:21	1
1,1,2-Trichloroethane	ND		1.0		ug/L			01/14/13 21:21	1
1,1-Dichloroethane	ND		1.0		ug/L			01/14/13 21:21	1
1,1-Dichloroethene	ND		1.0		ug/L			01/14/13 21:21	1
1,1-Dichloropropene	ND		1.0		ug/L			01/14/13 21:21	1
1,2,3-Trichlorobenzene	ND		1.0		ug/L			01/14/13 21:21	1
1,2,3-Trichloropropane	ND		1.0		ug/L			01/14/13 21:21	1
1,2,4-Trichlorobenzene	ND		1.0		ug/L			01/14/13 21:21	1
1,2,4-Trimethylbenzene	ND		1.0		ug/L			01/14/13 21:21	1
1,2-Dibromo-3-Chloropropane	ND		5.0		ug/L			01/14/13 21:21	1
1,2-Dichlorobenzene	ND		1.0		ug/L			01/14/13 21:21	1
1,2-Dichloroethane	ND		1.0		ug/L			01/14/13 21:21	1
1,2-Dichloropropane	ND		1.0		ug/L			01/14/13 21:21	1
1,3,5-Trimethylbenzene	ND		1.0		ug/L			01/14/13 21:21	1
1,3-Dichlorobenzene	ND		1.0		ug/L			01/14/13 21:21	1
1,3-Dichloropropane	ND		1.0		ug/L			01/14/13 21:21	1
1,4-Dichlorobenzene	ND		1.0		ug/L			01/14/13 21:21	1
1,4-Dioxane	ND	*	50		ug/L			01/14/13 21:21	1
2,2-Dichloropropane	ND		1.0		ug/L			01/14/13 21:21	1
2-Butanone (MEK)	ND	*	10		ug/L			01/14/13 21:21	1
2-Chlorotoluene	ND		1.0		ug/L			01/14/13 21:21	1
2-Hexanone	ND		10		ug/L			01/14/13 21:21	1
4-Chlorotoluene	ND		1.0		ug/L			01/14/13 21:21	1
4-Isopropyltoluene	ND		1.0		ug/L			01/14/13 21:21	1
4-Methyl-2-pentanone (MIBK)	ND		10		ug/L			01/14/13 21:21	1
Acetone	ND		50		ug/L			01/14/13 21:21	1
Benzene	ND		1.0		ug/L			01/14/13 21:21	1
Bromobenzene	ND		1.0		ug/L			01/14/13 21:21	1
Bromoform	ND		1.0		ug/L			01/14/13 21:21	1
Bromomethane	ND		2.0		ug/L			01/14/13 21:21	1
Carbon disulfide	ND		10		ug/L			01/14/13 21:21	1
Carbon tetrachloride	ND		1.0		ug/L			01/14/13 21:21	1
Chlorobenzene	ND		1.0		ug/L			01/14/13 21:21	1
Chlorobromomethane	ND		1.0		ug/L			01/14/13 21:21	1
Chlorodibromomethane	ND		0.50		ug/L			01/14/13 21:21	1
Chloroethane	ND		2.0		ug/L			01/14/13 21:21	1
Chloroform	ND		1.0		ug/L			01/14/13 21:21	1
Chloromethane	ND		2.0		ug/L			01/14/13 21:21	1
cis-1,2-Dichloroethene	ND		1.0		ug/L			01/14/13 21:21	1
cis-1,3-Dichloropropene	ND		0.40		ug/L			01/14/13 21:21	1
Dichlorobromomethane	ND		0.50		ug/L			01/14/13 21:21	1
Dichlorodifluoromethane	ND		1.0		ug/L			01/14/13 21:21	1
Ethyl ether	ND		1.0		ug/L			01/14/13 21:21	1
Ethylbenzene	ND		1.0		ug/L			01/14/13 21:21	1
Ethylene Dibromide	ND		1.0		ug/L			01/14/13 21:21	1
Hexachlorobutadiene	ND		0.40		ug/L			01/14/13 21:21	1
Isopropyl ether	ND		10		ug/L			01/14/13 21:21	1

Client Sample ID: MW-1034-20130111-01

Lab Sample ID: 480-31512-4

Date Collected: 01/11/13 10:00

Matrix: Water

Date Received: 01/12/13 10:15

Method: 8260C - Volatile Organic Compounds (GC/MS) (Continued)

Analyte	Result	Qualifier	RL	MDL	Unit	D	Prepared	Analyzed	Dil Fac
Isopropylbenzene	ND		1.0		ug/L			01/14/13 21:21	1
Methyl tert-butyl ether	ND		1.0		ug/L			01/14/13 21:21	1
Methylene Chloride	ND		1.0		ug/L			01/14/13 21:21	1
m-Xylene & p-Xylene	ND		2.0		ug/L			01/14/13 21:21	1
Naphthalene	**5.6**		5.0		ug/L			01/14/13 21:21	1
n-Butylbenzene	ND		1.0		ug/L			01/14/13 21:21	1
N-Propylbenzene	ND		1.0		ug/L			01/14/13 21:21	1
o-Xylene	ND		1.0		ug/L			01/14/13 21:21	1
sec-Butylbenzene	ND		1.0		ug/L			01/14/13 21:21	1
Styrene	ND		1.0		ug/L			01/14/13 21:21	1
Tert-amyl methyl ether	ND		5.0		ug/L			01/14/13 21:21	1
Tert-butyl ethyl ether	ND		5.0		ug/L			01/14/13 21:21	1
tert-Butylbenzene	ND		1.0		ug/L			01/14/13 21:21	1
Tetrachloroethene	ND		1.0		ug/L			01/14/13 21:21	1
Tetrahydrofuran	ND		10		ug/L			01/14/13 21:21	1
Toluene	ND		1.0		ug/L			01/14/13 21:21	1
trans-1,2-Dichloroethene	ND		1.0		ug/L			01/14/13 21:21	1
trans-1,3-Dichloropropene	ND		0.40		ug/L			01/14/13 21:21	1
Trichloroethene	**6.8**		1.0		ug/L			01/14/13 21:21	1
Trichlorofluoromethane	ND		1.0		ug/L			01/14/13 21:21	1
Vinyl chloride	ND		0.50		ug/L			01/14/13 21:21	1
Dibromomethane	ND		1.0		ug/L			01/14/13 21:21	1

Surrogate	*%Recovery*	*Qualifier*	*Limits*	*Prepared*	*Analyzed*	*Dil Fac*
Toluene-d8 (Surr)	*118*		*70 - 130*		*01/14/13 21:21*	*1*
1,2-Dichloroethane-d4 (Surr)	*110*		*70 - 130*		*01/14/13 21:21*	*1*
4-Bromofluorobenzene (Surr)	*115*		*70 - 130*		*01/14/13 21:21*	*1*

Client Sample ID: DUP-001-20130111-01

Lab Sample ID: 480-31512-5

Date Collected: 01/11/13 11:11

Matrix: Water

Date Received: 01/12/13 10:15

Method: 8260C - Volatile Organic Compounds (GC/MS)

Analyte	Result	Qualifier	RL	MDL	Unit	D	Prepared	Analyzed	Dil Fac
1,1,1,2-Tetrachloroethane	ND		1.0		ug/L			01/14/13 21:45	1
1,1,1-Trichloroethane	**2.1**		1.0		ug/L			01/14/13 21:45	1
1,1,2,2-Tetrachloroethane	ND		0.50		ug/L			01/14/13 21:45	1
1,1,2-Trichloroethane	ND		1.0		ug/L			01/14/13 21:45	1
1,1-Dichloroethane	ND		1.0		ug/L			01/14/13 21:45	1
1,1-Dichloroethene	ND		1.0		ug/L			01/14/13 21:45	1
1,1-Dichloropropene	ND		1.0		ug/L			01/14/13 21:45	1
1,2,3-Trichlorobenzene	ND		1.0		ug/L			01/14/13 21:45	1
1,2,3-Trichloropropane	ND		1.0		ug/L			01/14/13 21:45	1
1,2,4-Trichlorobenzene	ND		1.0		ug/L			01/14/13 21:45	1
1,2,4-Trimethylbenzene	ND		1.0		ug/L			01/14/13 21:45	1
1,2-Dibromo-3-Chloropropane	ND		5.0		ug/L			01/14/13 21:45	1
1,2-Dichlorobenzene	ND		1.0		ug/L			01/14/13 21:45	1
1,2-Dichloroethane	ND		1.0		ug/L			01/14/13 21:45	1
1,2-Dichloropropane	ND		1.0		ug/L			01/14/13 21:45	1
1,3,5-Trimethylbenzene	ND		1.0		ug/L			01/14/13 21:45	1

Client: ERM-Northeast
Project/Site: IDS Wayland

TestAmerica Job ID: 480-31512-1

Client Sample ID: DUP-001-20130111-01
Date Collected: 01/11/13 11:11
Date Received: 01/12/13 10:15

Lab Sample ID: 480-31512-5
Matrix: Water

Method: 8260C - Volatile Organic Compounds (GC/MS) (Continued)

Analyte	Result	Qualifier	RL	MDL	Unit	D	Prepared	Analyzed	Dil Fac
1,3-Dichlorobenzene	ND		1.0		ug/L			01/14/13 21:45	1
1,3-Dichloropropane	ND		1.0		ug/L			01/14/13 21:45	1
1,4-Dichlorobenzene	ND		1.0		ug/L			01/14/13 21:45	1
1,4-Dioxane	ND	*	50		ug/L			01/14/13 21:45	1
2,2-Dichloropropane	ND		1.0		ug/L			01/14/13 21:45	1
2-Butanone (MEK)	ND	*	10		ug/L			01/14/13 21:45	1
2-Chlorotoluene	ND		1.0		ug/L			01/14/13 21:45	1
2-Hexanone	ND		10		ug/L			01/14/13 21:45	1
4-Chlorotoluene	ND		1.0		ug/L			01/14/13 21:45	1
4-Isopropyltoluene	ND		1.0		ug/L			01/14/13 21:45	1
4-Methyl-2-pentanone (MIBK)	ND		10		ug/L			01/14/13 21:45	1
Acetone	ND		50		ug/L			01/14/13 21:45	1
Benzene	ND		1.0		ug/L			01/14/13 21:45	1
Bromobenzene	ND		1.0		ug/L			01/14/13 21:45	1
Bromoform	ND		1.0		ug/L			01/14/13 21:45	1
Bromomethane	ND		2.0		ug/L			01/14/13 21:45	1
Carbon disulfide	ND		10		ug/L			01/14/13 21:45	1
Carbon tetrachloride	ND		1.0		ug/L			01/14/13 21:45	1
Chlorobenzene	ND		1.0		ug/L			01/14/13 21:45	1
Chlorobromomethane	ND		1.0		ug/L			01/14/13 21:45	1
Chlorodibromomethane	ND		0.50		ug/L			01/14/13 21:45	1
Chloroethane	ND		2.0		ug/L			01/14/13 21:45	1
Chloroform	ND		1.0		ug/L			01/14/13 21:45	1
Chloromethane	ND		2.0		ug/L			01/14/13 21:45	1
cis-1,2-Dichloroethene	ND		1.0		ug/L			01/14/13 21:45	1
cis-1,3-Dichloropropene	ND		0.40		ug/L			01/14/13 21:45	1
Dichlorobromomethane	ND		0.50		ug/L			01/14/13 21:45	1
Dichlorodifluoromethane	ND		1.0		ug/L			01/14/13 21:45	1
Ethyl ether	ND		1.0		ug/L			01/14/13 21:45	1
Ethylbenzene	ND		1.0		ug/L			01/14/13 21:45	1
Ethylene Dibromide	ND		1.0		ug/L			01/14/13 21:45	1
Hexachlorobutadiene	ND		0.40		ug/L			01/14/13 21:45	1
Isopropyl ether	ND		10		ug/L			01/14/13 21:45	1
Isopropylbenzene	ND		1.0		ug/L			01/14/13 21:45	1
Methyl tert-butyl ether	ND		1.0		ug/L			01/14/13 21:45	1
Methylene Chloride	ND		1.0		ug/L			01/14/13 21:45	1
m-Xylene & p-Xylene	ND		2.0		ug/L			01/14/13 21:45	1
Naphthalene	**7.4**		5.0		ug/L			01/14/13 21:45	1
n-Butylbenzene	ND		1.0		ug/L			01/14/13 21:45	1
N-Propylbenzene	ND		1.0		ug/L			01/14/13 21:45	1
o-Xylene	ND		1.0		ug/L			01/14/13 21:45	1
sec-Butylbenzene	ND		1.0		ug/L			01/14/13 21:45	1
Styrene	ND		1.0		ug/L			01/14/13 21:45	1
Tert-amyl methyl ether	ND		5.0		ug/L			01/14/13 21:45	1
Tert-butyl ethyl ether	ND		5.0		ug/L			01/14/13 21:45	1
tert-Butylbenzene	ND		1.0		ug/L			01/14/13 21:45	1
Tetrachloroethene	ND		1.0		ug/L			01/14/13 21:45	1
Tetrahydrofuran	ND		10		ug/L			01/14/13 21:45	1
Toluene	ND		1.0		ug/L			01/14/13 21:45	1

Client Sample ID: DUP-001-20130111-01

Lab Sample ID: 480-31512-5

Date Collected: 01/11/13 11:11

Matrix: Water

Date Received: 01/12/13 10:15

Method: 8260C - Volatile Organic Compounds (GC/MS) (Continued)

Analyte	Result	Qualifier	RL	MDL	Unit	D	Prepared	Analyzed	Dil Fac
trans-1,2-Dichloroethene	ND		1.0		ug/L			01/14/13 21:45	1
trans-1,3-Dichloropropene	ND		0.40		ug/L			01/14/13 21:45	1
Trichloroethene	**6.6**		1.0		ug/L			01/14/13 21:45	1
Trichlorofluoromethane	ND		1.0		ug/L			01/14/13 21:45	1
Vinyl chloride	ND		0.50		ug/L			01/14/13 21:45	1
Dibromomethane	ND		1.0		ug/L			01/14/13 21:45	1

Surrogate	*%Recovery*	*Qualifier*	*Limits*	*Prepared*	*Analyzed*	*Dil Fac*
Toluene-d8 (Surr)	*120*		*70 - 130*		*01/14/13 21:45*	*1*
1,2-Dichloroethane-d4 (Surr)	*114*		*70 - 130*		*01/14/13 21:45*	*1*
4-Bromofluorobenzene (Surr)	*116*		*70 - 130*		*01/14/13 21:45*	*1*

Client Sample ID: MW-1004-20130111-01

Lab Sample ID: 480-31512-6

Date Collected: 01/11/13 08:20

Matrix: Solid

Date Received: 01/12/13 10:15

Percent Solids: 93.8

Method: 8260C - Volatile Organic Compounds (GC/MS)

Analyte	Result	Qualifier	RL	MDL	Unit	D	Prepared	Analyzed	Dil Fac
1,1,1,2-Tetrachloroethane	ND		2.8		ug/Kg	☼	01/15/13 00:06	01/15/13 02:52	1
1,1,1-Trichloroethane	ND		2.8		ug/Kg	☼	01/15/13 00:06	01/15/13 02:52	1
1,1,2,2-Tetrachloroethane	ND		2.8		ug/Kg	☼	01/15/13 00:06	01/15/13 02:52	1
1,1,2-Trichloroethane	ND		2.8		ug/Kg	☼	01/15/13 00:06	01/15/13 02:52	1
1,1-Dichloroethane	ND		2.8		ug/Kg	☼	01/15/13 00:06	01/15/13 02:52	1
1,1-Dichloroethene	ND		2.8		ug/Kg	☼	01/15/13 00:06	01/15/13 02:52	1
1,1-Dichloropropene	ND		2.8		ug/Kg	☼	01/15/13 00:06	01/15/13 02:52	1
1,2,3-Trichlorobenzene	ND		2.8		ug/Kg	☼	01/15/13 00:06	01/15/13 02:52	1
1,2,3-Trichloropropane	ND		2.8		ug/Kg	☼	01/15/13 00:06	01/15/13 02:52	1
1,2,4-Trichlorobenzene	ND		2.8		ug/Kg	☼	01/15/13 00:06	01/15/13 02:52	1
1,2,4-Trimethylbenzene	ND		2.8		ug/Kg	☼	01/15/13 00:06	01/15/13 02:52	1
1,2-Dibromo-3-Chloropropane	ND		28		ug/Kg	☼	01/15/13 00:06	01/15/13 02:52	1
1,2-Dichlorobenzene	ND		2.8		ug/Kg	☼	01/15/13 00:06	01/15/13 02:52	1
1,2-Dichloroethane	ND		2.8		ug/Kg	☼	01/15/13 00:06	01/15/13 02:52	1
1,2-Dichloropropane	ND		2.8		ug/Kg	☼	01/15/13 00:06	01/15/13 02:52	1
1,3,5-Trimethylbenzene	ND		2.8		ug/Kg	☼	01/15/13 00:06	01/15/13 02:52	1
1,3-Dichlorobenzene	ND		2.8		ug/Kg	☼	01/15/13 00:06	01/15/13 02:52	1
1,3-Dichloropropane	ND		2.8		ug/Kg	☼	01/15/13 00:06	01/15/13 02:52	1
1,4-Dichlorobenzene	ND		2.8		ug/Kg	☼	01/15/13 00:06	01/15/13 02:52	1
1,4-Dioxane	ND		280		ug/Kg	☼	01/15/13 00:06	01/15/13 02:52	1
2,2-Dichloropropane	ND		2.8		ug/Kg	☼	01/15/13 00:06	01/15/13 02:52	1
2-Butanone (MEK)	ND	*	28		ug/Kg	☼	01/15/13 00:06	01/15/13 02:52	1
2-Chlorotoluene	ND		2.8		ug/Kg	☼	01/15/13 00:06	01/15/13 02:52	1
2-Hexanone	ND		28		ug/Kg	☼	01/15/13 00:06	01/15/13 02:52	1
4-Chlorotoluene	ND		2.8		ug/Kg	☼	01/15/13 00:06	01/15/13 02:52	1
4-Isopropyltoluene	ND		2.8		ug/Kg	☼	01/15/13 00:06	01/15/13 02:52	1
4-Methyl-2-pentanone (MIBK)	ND		28		ug/Kg	☼	01/15/13 00:06	01/15/13 02:52	1
Acetone	ND		280		ug/Kg	☼	01/15/13 00:06	01/15/13 02:52	1
Benzene	ND		2.8		ug/Kg	☼	01/15/13 00:06	01/15/13 02:52	1
Bromobenzene	ND		2.8		ug/Kg	☼	01/15/13 00:06	01/15/13 02:52	1
Bromoform	ND		2.8		ug/Kg	☼	01/15/13 00:06	01/15/13 02:52	1
Bromomethane	ND	*	5.6		ug/Kg	☼	01/15/13 00:06	01/15/13 02:52	1

Client: ERM-Northeast
Project/Site: IDS Wayland

TestAmerica Job ID: 480-31512-1

Client Sample ID: MW-1004-20130111-01
Date Collected: 01/11/13 08:20
Date Received: 01/12/13 10:15

Lab Sample ID: 480-31512-6
Matrix: Solid
Percent Solids: 93.8

Method: 8260C - Volatile Organic Compounds (GC/MS) (Continued)

Analyte	Result	Qualifier	RL	MDL	Unit	D	Prepared	Analyzed	Dil Fac
Carbon disulfide	ND		2.8		ug/Kg	☼	01/15/13 00:06	01/15/13 02:52	1
Carbon tetrachloride	ND		2.8		ug/Kg	☼	01/15/13 00:06	01/15/13 02:52	1
Chlorobenzene	ND		2.8		ug/Kg	☼	01/15/13 00:06	01/15/13 02:52	1
Chlorobromomethane	ND		2.8		ug/Kg	☼	01/15/13 00:06	01/15/13 02:52	1
Chlorodibromomethane	ND		2.8		ug/Kg	☼	01/15/13 00:06	01/15/13 02:52	1
Chloroethane	ND		5.6		ug/Kg	☼	01/15/13 00:06	01/15/13 02:52	1
Chloroform	ND		2.8		ug/Kg	☼	01/15/13 00:06	01/15/13 02:52	1
Chloromethane	ND		5.6		ug/Kg	☼	01/15/13 00:06	01/15/13 02:52	1
cis-1,2-Dichloroethene	ND		2.8		ug/Kg	☼	01/15/13 00:06	01/15/13 02:52	1
cis-1,3-Dichloropropene	ND		2.8		ug/Kg	☼	01/15/13 00:06	01/15/13 02:52	1
Dichlorobromomethane	ND		2.8		ug/Kg	☼	01/15/13 00:06	01/15/13 02:52	1
Dichlorodifluoromethane	ND		5.6		ug/Kg	☼	01/15/13 00:06	01/15/13 02:52	1
Ethyl ether	ND		2.8		ug/Kg	☼	01/15/13 00:06	01/15/13 02:52	1
Ethylbenzene	ND		2.8		ug/Kg	☼	01/15/13 00:06	01/15/13 02:52	1
Ethylene Dibromide	ND		2.8		ug/Kg	☼	01/15/13 00:06	01/15/13 02:52	1
Hexachlorobutadiene	ND		2.8		ug/Kg	☼	01/15/13 00:06	01/15/13 02:52	1
Isopropyl ether	ND		2.8		ug/Kg	☼	01/15/13 00:06	01/15/13 02:52	1
Isopropylbenzene	ND		2.8		ug/Kg	☼	01/15/13 00:06	01/15/13 02:52	1
Methyl tert-butyl ether	ND		2.8		ug/Kg	☼	01/15/13 00:06	01/15/13 02:52	1
Methylene Chloride	ND		2.8		ug/Kg	☼	01/15/13 00:06	01/15/13 02:52	1
m-Xylene & p-Xylene	ND		5.6		ug/Kg	☼	01/15/13 00:06	01/15/13 02:52	1
Naphthalene	ND		28		ug/Kg	☼	01/15/13 00:06	01/15/13 02:52	1
n-Butylbenzene	ND		2.8		ug/Kg	☼	01/15/13 00:06	01/15/13 02:52	1
N-Propylbenzene	ND		2.8		ug/Kg	☼	01/15/13 00:06	01/15/13 02:52	1
o-Xylene	ND		2.8		ug/Kg	☼	01/15/13 00:06	01/15/13 02:52	1
sec-Butylbenzene	ND		2.8		ug/Kg	☼	01/15/13 00:06	01/15/13 02:52	1
Styrene	ND		2.8		ug/Kg	☼	01/15/13 00:06	01/15/13 02:52	1
Tert-amyl methyl ether	ND		2.8		ug/Kg	☼	01/15/13 00:06	01/15/13 02:52	1
Tert-butyl ethyl ether	ND		2.8		ug/Kg	☼	01/15/13 00:06	01/15/13 02:52	1
tert-Butylbenzene	ND		2.8		ug/Kg	☼	01/15/13 00:06	01/15/13 02:52	1
Tetrachloroethene	ND		2.8		ug/Kg	☼	01/15/13 00:06	01/15/13 02:52	1
Tetrahydrofuran	ND		56		ug/Kg	☼	01/15/13 00:06	01/15/13 02:52	1
Toluene	ND		2.8		ug/Kg	☼	01/15/13 00:06	01/15/13 02:52	1
trans-1,2-Dichloroethene	ND		2.8		ug/Kg	☼	01/15/13 00:06	01/15/13 02:52	1
trans-1,3-Dichloropropene	ND		2.8		ug/Kg	☼	01/15/13 00:06	01/15/13 02:52	1
Trichloroethene	ND		2.8		ug/Kg	☼	01/15/13 00:06	01/15/13 02:52	1
Trichlorofluoromethane	ND		5.6		ug/Kg	☼	01/15/13 00:06	01/15/13 02:52	1
Vinyl chloride	ND		2.8		ug/Kg	☼	01/15/13 00:06	01/15/13 02:52	1
Dibromomethane	ND		2.8		ug/Kg	☼	01/15/13 00:06	01/15/13 02:52	1

Surrogate	*%Recovery*	*Qualifier*	*Limits*	*Prepared*	*Analyzed*	*Dil Fac*
Toluene-d8 (Surr)	*84*		*70 - 130*	*01/15/13 00:06*	*01/15/13 02:52*	*1*
1,2-Dichloroethane-d4 (Surr)	*92*		*70 - 130*	*01/15/13 00:06*	*01/15/13 02:52*	*1*
4-Bromofluorobenzene (Surr)	*83*		*70 - 130*	*01/15/13 00:06*	*01/15/13 02:52*	*1*

Client Sample Results

Client: ERM-Northeast
Project/Site: IDS Wayland

TestAmerica Job ID: 480-31512-1

Client Sample ID: MW-1008-20130111-01
Date Collected: 01/11/13 11:30
Date Received: 01/12/13 10:15

Lab Sample ID: 480-31512-7
Matrix: Solid
Percent Solids: 91.7

Method: 8260C - Volatile Organic Compounds (GC/MS)

Analyte	Result	Qualifier	RL	MDL	Unit	D	Prepared	Analyzed	Dil Fac
1,1,1,2-Tetrachloroethane	ND		2.6		ug/Kg	☼	01/15/13 00:06	01/15/13 03:17	1
1,1,1-Trichloroethane	ND		2.6		ug/Kg	☼	01/15/13 00:06	01/15/13 03:17	1
1,1,2,2-Tetrachloroethane	ND		2.6		ug/Kg	☼	01/15/13 00:06	01/15/13 03:17	1
1,1,2-Trichloroethane	ND		2.6		ug/Kg	☼	01/15/13 00:06	01/15/13 03:17	1
1,1-Dichloroethane	ND		2.6		ug/Kg	☼	01/15/13 00:06	01/15/13 03:17	1
1,1-Dichloroethene	ND		2.6		ug/Kg	☼	01/15/13 00:06	01/15/13 03:17	1
1,1-Dichloropropene	ND		2.6		ug/Kg	☼	01/15/13 00:06	01/15/13 03:17	1
1,2,3-Trichlorobenzene	ND		2.6		ug/Kg	☼	01/15/13 00:06	01/15/13 03:17	1
1,2,3-Trichloropropane	ND		2.6		ug/Kg	☼	01/15/13 00:06	01/15/13 03:17	1
1,2,4-Trichlorobenzene	ND		2.6		ug/Kg	☼	01/15/13 00:06	01/15/13 03:17	1
1,2,4-Trimethylbenzene	ND		2.6		ug/Kg	☼	01/15/13 00:06	01/15/13 03:17	1
1,2-Dibromo-3-Chloropropane	ND		26		ug/Kg	☼	01/15/13 00:06	01/15/13 03:17	1
1,2-Dichlorobenzene	ND		2.6		ug/Kg	☼	01/15/13 00:06	01/15/13 03:17	1
1,2-Dichloroethane	ND		2.6		ug/Kg	☼	01/15/13 00:06	01/15/13 03:17	1
1,2-Dichloropropane	ND		2.6		ug/Kg	☼	01/15/13 00:06	01/15/13 03:17	1
1,3,5-Trimethylbenzene	ND		2.6		ug/Kg	☼	01/15/13 00:06	01/15/13 03:17	1
1,3-Dichlorobenzene	ND		2.6		ug/Kg	☼	01/15/13 00:06	01/15/13 03:17	1
1,3-Dichloropropane	ND		2.6		ug/Kg	☼	01/15/13 00:06	01/15/13 03:17	1
1,4-Dichlorobenzene	ND		2.6		ug/Kg	☼	01/15/13 00:06	01/15/13 03:17	1
1,4-Dioxane	ND		260		ug/Kg	☼	01/15/13 00:06	01/15/13 03:17	1
2,2-Dichloropropane	ND		2.6		ug/Kg	☼	01/15/13 00:06	01/15/13 03:17	1
2-Butanone (MEK)	ND	*	26		ug/Kg	☼	01/15/13 00:06	01/15/13 03:17	1
2-Chlorotoluene	ND		2.6		ug/Kg	☼	01/15/13 00:06	01/15/13 03:17	1
2-Hexanone	ND		26		ug/Kg	☼	01/15/13 00:06	01/15/13 03:17	1
4-Chlorotoluene	ND		2.6		ug/Kg	☼	01/15/13 00:06	01/15/13 03:17	1
4-Isopropyltoluene	ND		2.6		ug/Kg	☼	01/15/13 00:06	01/15/13 03:17	1
4-Methyl-2-pentanone (MIBK)	ND		26		ug/Kg	☼	01/15/13 00:06	01/15/13 03:17	1
Acetone	ND		260		ug/Kg	☼	01/15/13 00:06	01/15/13 03:17	1
Benzene	ND		2.6		ug/Kg	☼	01/15/13 00:06	01/15/13 03:17	1
Bromobenzene	ND		2.6		ug/Kg	☼	01/15/13 00:06	01/15/13 03:17	1
Bromoform	ND		2.6		ug/Kg	☼	01/15/13 00:06	01/15/13 03:17	1
Bromomethane	ND	*	5.1		ug/Kg	☼	01/15/13 00:06	01/15/13 03:17	1
Carbon disulfide	ND		2.6		ug/Kg	☼	01/15/13 00:06	01/15/13 03:17	1
Carbon tetrachloride	ND		2.6		ug/Kg	☼	01/15/13 00:06	01/15/13 03:17	1
Chlorobenzene	ND		2.6		ug/Kg	☼	01/15/13 00:06	01/15/13 03:17	1
Chlorobromomethane	ND		2.6		ug/Kg	☼	01/15/13 00:06	01/15/13 03:17	1
Chlorodibromomethane	ND		2.6		ug/Kg	☼	01/15/13 00:06	01/15/13 03:17	1
Chloroethane	ND		5.1		ug/Kg	☼	01/15/13 00:06	01/15/13 03:17	1
Chloroform	ND		2.6		ug/Kg	☼	01/15/13 00:06	01/15/13 03:17	1
Chloromethane	ND		5.1		ug/Kg	☼	01/15/13 00:06	01/15/13 03:17	1
cis-1,2-Dichloroethene	ND		2.6		ug/Kg	☼	01/15/13 00:06	01/15/13 03:17	1
cis-1,3-Dichloropropene	ND		2.6		ug/Kg	☼	01/15/13 00:06	01/15/13 03:17	1
Dichlorobromomethane	ND		2.6		ug/Kg	☼	01/15/13 00:06	01/15/13 03:17	1
Dichlorodifluoromethane	ND		5.1		ug/Kg	☼	01/15/13 00:06	01/15/13 03:17	1
Ethyl ether	ND		2.6		ug/Kg	☼	01/15/13 00:06	01/15/13 03:17	1
Ethylbenzene	ND		2.6		ug/Kg	☼	01/15/13 00:06	01/15/13 03:17	1
Ethylene Dibromide	ND		2.6		ug/Kg	☼	01/15/13 00:06	01/15/13 03:17	1
Hexachlorobutadiene	ND		2.6		ug/Kg	☼	01/15/13 00:06	01/15/13 03:17	1
Isopropyl ether	ND		2.6		ug/Kg	☼	01/15/13 00:06	01/15/13 03:17	1

Client Sample ID: MW-1008-20130111-01

Lab Sample ID: 480-31512-7

Date Collected: 01/11/13 11:30
Matrix: Solid
Date Received: 01/12/13 10:15
Percent Solids: 91.7

Method: 8260C - Volatile Organic Compounds (GC/MS) (Continued)

Analyte	Result	Qualifier	RL	MDL	Unit	D	Prepared	Analyzed	Dil Fac
Isopropylbenzene	ND		2.6		ug/Kg	☼	01/15/13 00:06	01/15/13 03:17	1
Methyl tert-butyl ether	ND		2.6		ug/Kg	☼	01/15/13 00:06	01/15/13 03:17	1
Methylene Chloride	ND		2.6		ug/Kg	☼	01/15/13 00:06	01/15/13 03:17	1
m-Xylene & p-Xylene	ND		5.1		ug/Kg	☼	01/15/13 00:06	01/15/13 03:17	1
Naphthalene	ND		26		ug/Kg	☼	01/15/13 00:06	01/15/13 03:17	1
n-Butylbenzene	ND		2.6		ug/Kg	☼	01/15/13 00:06	01/15/13 03:17	1
N-Propylbenzene	ND		2.6		ug/Kg	☼	01/15/13 00:06	01/15/13 03:17	1
o-Xylene	ND		2.6		ug/Kg	☼	01/15/13 00:06	01/15/13 03:17	1
sec-Butylbenzene	ND		2.6		ug/Kg	☼	01/15/13 00:06	01/15/13 03:17	1
Styrene	ND		2.6		ug/Kg	☼	01/15/13 00:06	01/15/13 03:17	1
Tert-amyl methyl ether	ND		2.6		ug/Kg	☼	01/15/13 00:06	01/15/13 03:17	1
Tert-butyl ethyl ether	ND		2.6		ug/Kg	☼	01/15/13 00:06	01/15/13 03:17	1
tert-Butylbenzene	ND		2.6		ug/Kg	☼	01/15/13 00:06	01/15/13 03:17	1
Tetrachloroethene	ND		2.6		ug/Kg	☼	01/15/13 00:06	01/15/13 03:17	1
Tetrahydrofuran	ND		51		ug/Kg	☼	01/15/13 00:06	01/15/13 03:17	1
Toluene	ND		2.6		ug/Kg	☼	01/15/13 00:06	01/15/13 03:17	1
trans-1,2-Dichloroethene	ND		2.6		ug/Kg	☼	01/15/13 00:06	01/15/13 03:17	1
trans-1,3-Dichloropropene	ND		2.6		ug/Kg	☼	01/15/13 00:06	01/15/13 03:17	1
Trichloroethene	ND		2.6		ug/Kg	☼	01/15/13 00:06	01/15/13 03:17	1
Trichlorofluoromethane	ND		5.1		ug/Kg	☼	01/15/13 00:06	01/15/13 03:17	1
Vinyl chloride	ND		2.6		ug/Kg	☼	01/15/13 00:06	01/15/13 03:17	1
Dibromomethane	ND		2.6		ug/Kg	☼	01/15/13 00:06	01/15/13 03:17	1

Surrogate	*%Recovery*	*Qualifier*	*Limits*	*Prepared*	*Analyzed*	*Dil Fac*
Toluene-d8 (Surr)	*81*		*70 - 130*	*01/15/13 00:06*	*01/15/13 03:17*	*1*
1,2-Dichloroethane-d4 (Surr)	*90*		*70 - 130*	*01/15/13 00:06*	*01/15/13 03:17*	*1*
4-Bromofluorobenzene (Surr)	*81*		*70 - 130*	*01/15/13 00:06*	*01/15/13 03:17*	*1*

Client Sample ID: TB-001-2013111-01

Lab Sample ID: 480-31512-8

Date Collected: 01/11/13 08:00
Matrix: Water
Date Received: 01/12/13 10:15

Method: 8260C - Volatile Organic Compounds (GC/MS)

Analyte	Result	Qualifier	RL	MDL	Unit	D	Prepared	Analyzed	Dil Fac
1,1,1,2-Tetrachloroethane	ND		1.0		ug/L			01/14/13 22:08	1
1,1,1-Trichloroethane	ND		1.0		ug/L			01/14/13 22:08	1
1,1,2,2-Tetrachloroethane	ND		0.50		ug/L			01/14/13 22:08	1
1,1,2-Trichloroethane	ND		1.0		ug/L			01/14/13 22:08	1
1,1-Dichloroethane	ND		1.0		ug/L			01/14/13 22:08	1
1,1-Dichloroethene	ND		1.0		ug/L			01/14/13 22:08	1
1,1-Dichloropropene	ND		1.0		ug/L			01/14/13 22:08	1
1,2,3-Trichlorobenzene	ND		1.0		ug/L			01/14/13 22:08	1
1,2,3-Trichloropropane	ND		1.0		ug/L			01/14/13 22:08	1
1,2,4-Trichlorobenzene	ND		1.0		ug/L			01/14/13 22:08	1
1,2,4-Trimethylbenzene	ND		1.0		ug/L			01/14/13 22:08	1
1,2-Dibromo-3-Chloropropane	ND		5.0		ug/L			01/14/13 22:08	1
1,2-Dichlorobenzene	ND		1.0		ug/L			01/14/13 22:08	1
1,2-Dichloroethane	ND		1.0		ug/L			01/14/13 22:08	1
1,2-Dichloropropane	ND		1.0		ug/L			01/14/13 22:08	1
1,3,5-Trimethylbenzene	ND		1.0		ug/L			01/14/13 22:08	1

Client: ERM-Northeast
Project/Site: IDS Wayland

TestAmerica Job ID: 480-31512-1

Client Sample ID: TB-001-2013111-01
Date Collected: 01/11/13 08:00
Date Received: 01/12/13 10:15

Lab Sample ID: 480-31512-8
Matrix: Water

Method: 8260C - Volatile Organic Compounds (GC/MS) (Continued)

Analyte	Result	Qualifier	RL	MDL	Unit	D	Prepared	Analyzed	Dil Fac
1,3-Dichlorobenzene	ND		1.0		ug/L			01/14/13 22:08	1
1,3-Dichloropropane	ND		1.0		ug/L			01/14/13 22:08	1
1,4-Dichlorobenzene	ND		1.0		ug/L			01/14/13 22:08	1
1,4-Dioxane	ND	*	50		ug/L			01/14/13 22:08	1
2,2-Dichloropropane	ND		1.0		ug/L			01/14/13 22:08	1
2-Butanone (MEK)	ND	*	10		ug/L			01/14/13 22:08	1
2-Chlorotoluene	ND		1.0		ug/L			01/14/13 22:08	1
2-Hexanone	ND		10		ug/L			01/14/13 22:08	1
4-Chlorotoluene	ND		1.0		ug/L			01/14/13 22:08	1
4-Isopropyltoluene	ND		1.0		ug/L			01/14/13 22:08	1
4-Methyl-2-pentanone (MIBK)	ND		10		ug/L			01/14/13 22:08	1
Acetone	ND		50		ug/L			01/14/13 22:08	1
Benzene	ND		1.0		ug/L			01/14/13 22:08	1
Bromobenzene	ND		1.0		ug/L			01/14/13 22:08	1
Bromoform	ND		1.0		ug/L			01/14/13 22:08	1
Bromomethane	ND		2.0		ug/L			01/14/13 22:08	1
Carbon disulfide	ND		10		ug/L			01/14/13 22:08	1
Carbon tetrachloride	ND		1.0		ug/L			01/14/13 22:08	1
Chlorobenzene	ND		1.0		ug/L			01/14/13 22:08	1
Chlorobromomethane	ND		1.0		ug/L			01/14/13 22:08	1
Chlorodibromomethane	ND		0.50		ug/L			01/14/13 22:08	1
Chloroethane	ND		2.0		ug/L			01/14/13 22:08	1
Chloroform	ND		1.0		ug/L			01/14/13 22:08	1
Chloromethane	ND		2.0		ug/L			01/14/13 22:08	1
cis-1,2-Dichloroethene	ND		1.0		ug/L			01/14/13 22:08	1
cis-1,3-Dichloropropene	ND		0.40		ug/L			01/14/13 22:08	1
Dichlorobromomethane	ND		0.50		ug/L			01/14/13 22:08	1
Dichlorodifluoromethane	ND		1.0		ug/L			01/14/13 22:08	1
Ethyl ether	ND		1.0		ug/L			01/14/13 22:08	1
Ethylbenzene	ND		1.0		ug/L			01/14/13 22:08	1
Ethylene Dibromide	ND		1.0		ug/L			01/14/13 22:08	1
Hexachlorobutadiene	ND		0.40		ug/L			01/14/13 22:08	1
Isopropyl ether	ND		10		ug/L			01/14/13 22:08	1
Isopropylbenzene	ND		1.0		ug/L			01/14/13 22:08	1
Methyl tert-butyl ether	ND		1.0		ug/L			01/14/13 22:08	1
Methylene Chloride	ND		1.0		ug/L			01/14/13 22:08	1
m-Xylene & p-Xylene	ND		2.0		ug/L			01/14/13 22:08	1
Naphthalene	ND		5.0		ug/L			01/14/13 22:08	1
n-Butylbenzene	ND		1.0		ug/L			01/14/13 22:08	1
N-Propylbenzene	ND		1.0		ug/L			01/14/13 22:08	1
o-Xylene	ND		1.0		ug/L			01/14/13 22:08	1
sec-Butylbenzene	ND		1.0		ug/L			01/14/13 22:08	1
Styrene	ND		1.0		ug/L			01/14/13 22:08	1
Tert-amyl methyl ether	ND		5.0		ug/L			01/14/13 22:08	1
Tert-butyl ethyl ether	ND		5.0		ug/L			01/14/13 22:08	1
tert-Butylbenzene	ND		1.0		ug/L			01/14/13 22:08	1
Tetrachloroethene	ND		1.0		ug/L			01/14/13 22:08	1
Tetrahydrofuran	ND		10		ug/L			01/14/13 22:08	1
Toluene	ND		1.0		ug/L			01/14/13 22:08	1

Client Sample Results

Client: ERM-Northeast
Project/Site: IDS Wayland

TestAmerica Job ID: 480-31512-1

Client Sample ID: TB-001-2013111-01

Lab Sample ID: 480-31512-8

Date Collected: 01/11/13 08:00

Matrix: Water

Date Received: 01/12/13 10:15

Method: 8260C - Volatile Organic Compounds (GC/MS) (Continued)

Analyte	Result	Qualifier	RL	MDL	Unit	D	Prepared	Analyzed	Dil Fac
trans-1,2-Dichloroethene	ND		1.0		ug/L			01/14/13 22:08	1
trans-1,3-Dichloropropene	ND		0.40		ug/L			01/14/13 22:08	1
Trichloroethene	ND		1.0		ug/L			01/14/13 22:08	1
Trichlorofluoromethane	ND		1.0		ug/L			01/14/13 22:08	1
Vinyl chloride	ND		0.50		ug/L			01/14/13 22:08	1
Dibromomethane	ND		1.0		ug/L			01/14/13 22:08	1

Surrogate	*%Recovery*	*Qualifier*	*Limits*	*Prepared*	*Analyzed*	*Dil Fac*
Toluene-d8 (Surr)	*117*		*70 - 130*		*01/14/13 22:08*	*1*
1,2-Dichloroethane-d4 (Surr)	*110*		*70 - 130*		*01/14/13 22:08*	*1*
4-Bromofluorobenzene (Surr)	*113*		*70 - 130*		*01/14/13 22:08*	*1*

Surrogate Summary

Client: ERM-Northeast
Project/Site: IDS Wayland

TestAmerica Job ID: 480-31512-1

Method: 8260C - Volatile Organic Compounds (GC/MS)

Matrix: Solid **Prep Type: Total/NA**

		Percent Surrogate Recovery (Acceptance Limits)		
		TOL	12DCE	BFB
Lab Sample ID	Client Sample ID	(70-130)	(70-130)	(70-130)
480-31512-6	MW-1004-20130111-01	84	92	83
480-31512-7	MW-1008-20130111-01	81	90	81
LCS 480-99480/5	Lab Control Sample	86	88	83
LCSD 480-99480/6	Lab Control Sample Dup	86	89	85
MB 480-99480/7	Method Blank	87	87	84

Surrogate Legend

TOL = Toluene-d8 (Surr)
12DCE = 1,2-Dichloroethane-d4 (Surr)
BFB = 4-Bromofluorobenzene (Surr)

Method: 8260C - Volatile Organic Compounds (GC/MS)

Matrix: Water **Prep Type: Total/NA**

		Percent Surrogate Recovery (Acceptance Limits)		
		TOL	12DCE	BFB
Lab Sample ID	Client Sample ID	(70-130)	(70-130)	(70-130)
480-31512-1	MW-1027-20130111-01	118	111	115
480-31512-2	MW-1028-20130111-01	119	107	113
480-31512-3	MW-1033-20130111-01	120	110	115
480-31512-4	MW-1034-20130111-01	118	110	115
480-31512-5	DUP-001-20130111-01	120	114	116
480-31512-8	TB-001-2013111-01	117	110	113
LCS 480-99400/4	Lab Control Sample	117	107	114
LCSD 480-99400/6	Lab Control Sample Dup	118	105	118
MB 480-99400/5	Method Blank	117	108	115

Surrogate Legend

TOL = Toluene-d8 (Surr)
12DCE = 1,2-Dichloroethane-d4 (Surr)
BFB = 4-Bromofluorobenzene (Surr)

Method: 8260C - Volatile Organic Compounds (GC/MS)

Lab Sample ID: MB 480-99400/5
Matrix: Water
Analysis Batch: 99400

Client Sample ID: Method Blank
Prep Type: Total/NA

Analyte	MB Result	MB Qualifier	RL	MDL	Unit	D	Prepared	Analyzed	Dil Fac
1,1,1,2-Tetrachloroethane	ND		1.0		ug/L			01/14/13 13:10	1
1,1,1-Trichloroethane	ND		1.0		ug/L			01/14/13 13:10	1
1,1,2,2-Tetrachloroethane	ND		0.50		ug/L			01/14/13 13:10	1
1,1,2-Trichloroethane	ND		1.0		ug/L			01/14/13 13:10	1
1,1-Dichloroethane	ND		1.0		ug/L			01/14/13 13:10	1
1,1-Dichloroethene	ND		1.0		ug/L			01/14/13 13:10	1
1,1-Dichloropropene	ND		1.0		ug/L			01/14/13 13:10	1
1,2,3-Trichlorobenzene	ND		1.0		ug/L			01/14/13 13:10	1
1,2,3-Trichloropropane	ND		1.0		ug/L			01/14/13 13:10	1
1,2,4-Trichlorobenzene	ND		1.0		ug/L			01/14/13 13:10	1
1,2,4-Trimethylbenzene	ND		1.0		ug/L			01/14/13 13:10	1
1,2-Dibromo-3-Chloropropane	ND		5.0		ug/L			01/14/13 13:10	1
1,2-Dichlorobenzene	ND		1.0		ug/L			01/14/13 13:10	1
1,2-Dichloroethane	ND		1.0		ug/L			01/14/13 13:10	1
1,2-Dichloropropane	ND		1.0		ug/L			01/14/13 13:10	1
1,3,5-Trimethylbenzene	ND		1.0		ug/L			01/14/13 13:10	1
1,3-Dichlorobenzene	ND		1.0		ug/L			01/14/13 13:10	1
1,3-Dichloropropane	ND		1.0		ug/L			01/14/13 13:10	1
1,4-Dichlorobenzene	ND		1.0		ug/L			01/14/13 13:10	1
1,4-Dioxane	ND		50		ug/L			01/14/13 13:10	1
2,2-Dichloropropane	ND		1.0		ug/L			01/14/13 13:10	1
2-Butanone (MEK)	ND		10		ug/L			01/14/13 13:10	1
2-Chlorotoluene	ND		1.0		ug/L			01/14/13 13:10	1
2-Hexanone	ND		10		ug/L			01/14/13 13:10	1
4-Chlorotoluene	ND		1.0		ug/L			01/14/13 13:10	1
4-Isopropyltoluene	ND		1.0		ug/L			01/14/13 13:10	1
4-Methyl-2-pentanone (MIBK)	ND		10		ug/L			01/14/13 13:10	1
Acetone	ND		50		ug/L			01/14/13 13:10	1
Benzene	ND		1.0		ug/L			01/14/13 13:10	1
Bromobenzene	ND		1.0		ug/L			01/14/13 13:10	1
Bromoform	ND		1.0		ug/L			01/14/13 13:10	1
Bromomethane	ND		2.0		ug/L			01/14/13 13:10	1
Carbon disulfide	ND		10		ug/L			01/14/13 13:10	1
Carbon tetrachloride	ND		1.0		ug/L			01/14/13 13:10	1
Chlorobenzene	ND		1.0		ug/L			01/14/13 13:10	1
Chlorobromomethane	ND		1.0		ug/L			01/14/13 13:10	1
Chlorodibromomethane	ND		0.50		ug/L			01/14/13 13:10	1
Chloroethane	ND		2.0		ug/L			01/14/13 13:10	1
Chloroform	ND		1.0		ug/L			01/14/13 13:10	1
Chloromethane	ND		2.0		ug/L			01/14/13 13:10	1
cis-1,2-Dichloroethene	ND		1.0		ug/L			01/14/13 13:10	1
cis-1,3-Dichloropropene	ND		0.40		ug/L			01/14/13 13:10	1
Dichlorobromomethane	ND		0.50		ug/L			01/14/13 13:10	1
Dichlorodifluoromethane	ND		1.0		ug/L			01/14/13 13:10	1
Ethyl ether	ND		1.0		ug/L			01/14/13 13:10	1
Ethylbenzene	ND		1.0		ug/L			01/14/13 13:10	1
Ethylene Dibromide	ND		1.0		ug/L			01/14/13 13:10	1
Hexachlorobutadiene	ND		0.40		ug/L			01/14/13 13:10	1

Method: 8260C - Volatile Organic Compounds (GC/MS) (Continued)

Lab Sample ID: MB 480-99400/5
Matrix: Water
Analysis Batch: 99400

Client Sample ID: Method Blank
Prep Type: Total/NA

Analyte	MB Result	MB Qualifier	RL	MDL	Unit	D	Prepared	Analyzed	Dil Fac
Isopropyl ether	ND		10		ug/L			01/14/13 13:10	1
Isopropylbenzene	ND		1.0		ug/L			01/14/13 13:10	1
Methyl tert-butyl ether	ND		1.0		ug/L			01/14/13 13:10	1
Methylene Chloride	ND		1.0		ug/L			01/14/13 13:10	1
m-Xylene & p-Xylene	ND		2.0		ug/L			01/14/13 13:10	1
Naphthalene	ND		5.0		ug/L			01/14/13 13:10	1
n-Butylbenzene	ND		1.0		ug/L			01/14/13 13:10	1
N-Propylbenzene	ND		1.0		ug/L			01/14/13 13:10	1
o-Xylene	ND		1.0		ug/L			01/14/13 13:10	1
sec-Butylbenzene	ND		1.0		ug/L			01/14/13 13:10	1
Styrene	ND		1.0		ug/L			01/14/13 13:10	1
Tert-amyl methyl ether	ND		5.0		ug/L			01/14/13 13:10	1
Tert-butyl ethyl ether	ND		5.0		ug/L			01/14/13 13:10	1
tert-Butylbenzene	ND		1.0		ug/L			01/14/13 13:10	1
Tetrachloroethene	ND		1.0		ug/L			01/14/13 13:10	1
Tetrahydrofuran	ND		10		ug/L			01/14/13 13:10	1
Toluene	ND		1.0		ug/L			01/14/13 13:10	1
trans-1,2-Dichloroethene	ND		1.0		ug/L			01/14/13 13:10	1
trans-1,3-Dichloropropene	ND		0.40		ug/L			01/14/13 13:10	1
Trichloroethene	ND		1.0		ug/L			01/14/13 13:10	1
Trichlorofluoromethane	ND		1.0		ug/L			01/14/13 13:10	1
Vinyl chloride	ND		0.50		ug/L			01/14/13 13:10	1
Dibromomethane	ND		1.0		ug/L			01/14/13 13:10	1

Surrogate	*MB %Recovery*	*MB Qualifier*	*Limits*	*Prepared*	*Analyzed*	*Dil Fac*
Toluene-d8 (Surr)	*117*		*70 - 130*		*01/14/13 13:10*	*1*
1,2-Dichloroethane-d4 (Surr)	*108*		*70 - 130*		*01/14/13 13:10*	*1*
4-Bromofluorobenzene (Surr)	*115*		*70 - 130*		*01/14/13 13:10*	*1*

Lab Sample ID: LCS 480-99400/4
Matrix: Water
Analysis Batch: 99400

Client Sample ID: Lab Control Sample
Prep Type: Total/NA

Analyte	Spike Added	LCS Result	LCS Qualifier	Unit	D	%Rec	%Rec. Limits
1,1,1,2-Tetrachloroethane	25.0	26.2		ug/L		105	70 - 130
1,1,1-Trichloroethane	25.0	26.4		ug/L		105	70 - 130
1,1,2,2-Tetrachloroethane	25.0	24.9		ug/L		100	70 - 130
1,1,2-Trichloroethane	25.0	25.3		ug/L		101	70 - 130
1,1-Dichloroethane	25.0	25.5		ug/L		102	70 - 130
1,1-Dichloroethene	25.0	25.9		ug/L		103	70 - 130
1,1-Dichloropropene	25.0	27.0		ug/L		108	70 - 130
1,2,3-Trichlorobenzene	25.0	23.1		ug/L		92	70 - 130
1,2,3-Trichloropropane	25.0	25.0		ug/L		100	70 - 130
1,2,4-Trichlorobenzene	25.0	25.6		ug/L		102	70 - 130
1,2,4-Trimethylbenzene	25.0	25.8		ug/L		103	70 - 130
1,2-Dibromo-3-Chloropropane	25.0	25.8		ug/L		103	70 - 130
1,2-Dichlorobenzene	25.0	25.6		ug/L		102	70 - 130
1,2-Dichloroethane	25.0	24.4		ug/L		98	70 - 130

Method: 8260C - Volatile Organic Compounds (GC/MS) (Continued)

Lab Sample ID: LCS 480-99400/4
Matrix: Water
Analysis Batch: 99400

Client Sample ID: Lab Control Sample
Prep Type: Total/NA

Analyte	Spike Added	LCS Result	LCS Qualifier	Unit	D	%Rec	%Rec. Limits
1,2-Dichloropropane	25.0	25.8		ug/L		103	70 - 130
1,3,5-Trimethylbenzene	25.0	25.6		ug/L		102	70 - 130
1,3-Dichlorobenzene	25.0	25.9		ug/L		104	70 - 130
1,3-Dichloropropane	25.0	25.3		ug/L		101	70 - 130
1,4-Dichlorobenzene	25.0	25.6		ug/L		102	70 - 130
1,4-Dioxane	1000	1500	*	ug/L		150	70 - 130
2,2-Dichloropropane	25.0	24.8		ug/L		99	70 - 130
2-Butanone (MEK)	125	174	*	ug/L		139	70 - 130
2-Chlorotoluene	25.0	25.1		ug/L		101	70 - 130
2-Hexanone	125	122		ug/L		98	70 - 130
4-Chlorotoluene	25.0	23.3		ug/L		93	70 - 130
4-Isopropyltoluene	25.0	27.4		ug/L		110	70 - 130
4-Methyl-2-pentanone (MIBK)	125	122		ug/L		98	70 - 130
Acetone	125	133		ug/L		106	70 - 130
Benzene	25.0	26.0		ug/L		104	70 - 130
Bromobenzene	25.0	25.9		ug/L		104	70 - 130
Bromoform	25.0	26.7		ug/L		107	70 - 130
Bromomethane	25.0	23.0		ug/L		92	70 - 130
Carbon disulfide	25.0	27.2		ug/L		109	70 - 130
Carbon tetrachloride	25.0	27.3		ug/L		109	70 - 130
Chlorobenzene	25.0	26.2		ug/L		105	70 - 130
Chlorobromomethane	25.0	26.7		ug/L		107	70 - 130
Chlorodibromomethane	25.0	25.7		ug/L		103	70 - 130
Chloroethane	25.0	24.7		ug/L		99	70 - 130
Chloroform	25.0	25.4		ug/L		102	70 - 130
Chloromethane	25.0	25.5		ug/L		102	70 - 130
cis-1,2-Dichloroethene	25.0	26.6		ug/L		106	70 - 130
cis-1,3-Dichloropropene	25.0	26.9		ug/L		108	70 - 130
Dichlorobromomethane	25.0	26.1		ug/L		104	70 - 130
Dichlorodifluoromethane	50.0	58.8		ug/L		118	70 - 130
Ethyl ether	25.0	25.2		ug/L		101	70 - 130
Ethylbenzene	25.0	25.9		ug/L		104	70 - 130
Ethylene Dibromide	25.0	25.6		ug/L		102	70 - 130
Hexachlorobutadiene	25.0	25.0		ug/L		100	70 - 130
Isopropyl ether	25.0	24.7		ug/L		99	70 - 130
Isopropylbenzene	25.0	25.7		ug/L		103	70 - 130
Methyl tert-butyl ether	25.0	26.1		ug/L		104	70 - 130
Methylene Chloride	25.0	24.8		ug/L		99	70 - 130
m-Xylene & p-Xylene	50.0	51.6		ug/L		103	70 - 130
Naphthalene	25.0	24.9		ug/L		100	70 - 130
n-Butylbenzene	25.0	26.4		ug/L		106	70 - 130
N-Propylbenzene	25.0	25.6		ug/L		102	70 - 130
o-Xylene	25.0	26.1		ug/L		105	70 - 130
sec-Butylbenzene	25.0	26.8		ug/L		107	70 - 130
Styrene	25.0	25.9		ug/L		103	70 - 130
Tert-amyl methyl ether	25.0	25.5		ug/L		102	70 - 130
Tert-butyl ethyl ether	25.0	24.9		ug/L		99	70 - 130
tert-Butylbenzene	25.0	26.6		ug/L		106	70 - 130

Method: 8260C - Volatile Organic Compounds (GC/MS) (Continued)

Lab Sample ID: LCS 480-99400/4
Matrix: Water
Analysis Batch: 99400

Client Sample ID: Lab Control Sample
Prep Type: Total/NA

Analyte	Spike Added	LCS Result	LCS Qualifier	Unit	D	%Rec	%Rec. Limits
Tetrachloroethene	25.0	28.2		ug/L		113	70 - 130
Tetrahydrofuran	125	128		ug/L		102	70 - 130
Toluene	25.0	26.0		ug/L		104	70 - 130
trans-1,2-Dichloroethene	25.0	25.9		ug/L		104	70 - 130
trans-1,3-Dichloropropene	25.0	25.7		ug/L		103	70 - 130
Trichloroethene	25.0	26.3		ug/L		105	70 - 130
Trichlorofluoromethane	25.0	25.8		ug/L		103	70 - 130
Vinyl chloride	25.0	26.3		ug/L		105	70 - 130
Dibromomethane	25.0	26.1		ug/L		105	70 - 130

Surrogate	*LCS %Recovery*	*LCS Qualifier*	*Limits*
Toluene-d8 (Surr)	*117*		*70 - 130*
1,2-Dichloroethane-d4 (Surr)	*107*		*70 - 130*
4-Bromofluorobenzene (Surr)	*114*		*70 - 130*

Lab Sample ID: LCSD 480-99400/6
Matrix: Water
Analysis Batch: 99400

Client Sample ID: Lab Control Sample Dup
Prep Type: Total/NA

Analyte	Spike Added	LCSD Result	LCSD Qualifier	Unit	D	%Rec	%Rec. Limits	RPD	RPD Limit
1,1,1,2-Tetrachloroethane	25.0	26.7		ug/L		107	70 - 130	2	20
1,1,1-Trichloroethane	25.0	26.2		ug/L		105	70 - 130	1	20
1,1,2,2-Tetrachloroethane	25.0	24.4		ug/L		97	70 - 130	2	20
1,1,2-Trichloroethane	25.0	25.0		ug/L		100	70 - 130	2	20
1,1-Dichloroethane	25.0	26.1		ug/L		104	70 - 130	3	20
1,1-Dichloroethene	25.0	27.4		ug/L		109	70 - 130	6	20
1,1-Dichloropropene	25.0	27.9		ug/L		112	70 - 130	3	20
1,2,3-Trichlorobenzene	25.0	22.5		ug/L		90	70 - 130	2	20
1,2,3-Trichloropropane	25.0	24.0		ug/L		96	70 - 130	4	20
1,2,4-Trichlorobenzene	25.0	24.8		ug/L		99	70 - 130	3	20
1,2,4-Trimethylbenzene	25.0	25.4		ug/L		102	70 - 130	2	20
1,2-Dibromo-3-Chloropropane	25.0	26.2		ug/L		105	70 - 130	2	20
1,2-Dichlorobenzene	25.0	25.7		ug/L		103	70 - 130	0	20
1,2-Dichloroethane	25.0	24.4		ug/L		98	70 - 130	0	20
1,2-Dichloropropane	25.0	25.5		ug/L		102	70 - 130	1	20
1,3,5-Trimethylbenzene	25.0	25.6		ug/L		103	70 - 130	0	20
1,3-Dichlorobenzene	25.0	26.4		ug/L		106	70 - 130	2	20
1,3-Dichloropropane	25.0	24.8		ug/L		99	70 - 130	2	20
1,4-Dichlorobenzene	25.0	25.5		ug/L		102	70 - 130	0	20
1,4-Dioxane	1000	1400	*	ug/L		140	70 - 130	6	20
2,2-Dichloropropane	25.0	24.1		ug/L		97	70 - 130	3	20
2-Butanone (MEK)	125	164	*	ug/L		131	70 - 130	6	20
2-Chlorotoluene	25.0	25.7		ug/L		103	70 - 130	2	20
2-Hexanone	125	122		ug/L		98	70 - 130	0	20
4-Chlorotoluene	25.0	23.6		ug/L		95	70 - 130	1	20
4-Isopropyltoluene	25.0	27.0		ug/L		108	70 - 130	1	20
4-Methyl-2-pentanone (MIBK)	125	123		ug/L		98	70 - 130	0	20
Acetone	125	123		ug/L		99	70 - 130	8	20

Method: 8260C - Volatile Organic Compounds (GC/MS) (Continued)

Lab Sample ID: LCSD 480-99400/6
Matrix: Water
Analysis Batch: 99400

Client Sample ID: Lab Control Sample Dup
Prep Type: Total/NA

Analyte	Spike Added	LCSD Result	LCSD Qualifier	Unit	D	%Rec	%Rec. Limits	RPD	RPD Limit
Benzene	25.0	26.4		ug/L		106	70 - 130	2	20
Bromobenzene	25.0	26.1		ug/L		104	70 - 130	0	20
Bromoform	25.0	26.7		ug/L		107	70 - 130	0	20
Bromomethane	25.0	22.5		ug/L		90	70 - 130	2	20
Carbon disulfide	25.0	27.2		ug/L		109	70 - 130	0	20
Carbon tetrachloride	25.0	27.1		ug/L		109	70 - 130	1	20
Chlorobenzene	25.0	26.6		ug/L		106	70 - 130	2	20
Chlorobromomethane	25.0	26.3		ug/L		105	70 - 130	2	20
Chlorodibromomethane	25.0	26.1		ug/L		105	70 - 130	2	20
Chloroethane	25.0	24.3		ug/L		97	70 - 130	2	20
Chloroform	25.0	25.4		ug/L		101	70 - 130	0	20
Chloromethane	25.0	25.8		ug/L		103	70 - 130	1	20
cis-1,2-Dichloroethene	25.0	26.7		ug/L		107	70 - 130	0	20
cis-1,3-Dichloropropene	25.0	26.9		ug/L		108	70 - 130	0	20
Dichlorobromomethane	25.0	26.3		ug/L		105	70 - 130	1	20
Dichlorodifluoromethane	50.0	61.1		ug/L		122	70 - 130	4	20
Ethyl ether	25.0	24.9		ug/L		100	70 - 130	1	20
Ethylbenzene	25.0	26.5		ug/L		106	70 - 130	2	20
Ethylene Dibromide	25.0	25.8		ug/L		103	70 - 130	1	20
Hexachlorobutadiene	25.0	25.0		ug/L		100	70 - 130	0	20
Isopropyl ether	25.0	24.7		ug/L		99	70 - 130	0	20
Isopropylbenzene	25.0	26.2		ug/L		105	70 - 130	2	20
Methyl tert-butyl ether	25.0	25.8		ug/L		103	70 - 130	1	20
Methylene Chloride	25.0	25.3		ug/L		101	70 - 130	2	20
m-Xylene & p-Xylene	50.0	52.0		ug/L		104	70 - 130	1	20
Naphthalene	25.0	24.8		ug/L		99	70 - 130	0	20
n-Butylbenzene	25.0	26.3		ug/L		105	70 - 130	0	20
N-Propylbenzene	25.0	25.9		ug/L		104	70 - 130	1	20
o-Xylene	25.0	26.3		ug/L		105	70 - 130	1	20
sec-Butylbenzene	25.0	26.7		ug/L		107	70 - 130	1	20
Styrene	25.0	26.4		ug/L		106	70 - 130	2	20
Tert-amyl methyl ether	25.0	25.0		ug/L		100	70 - 130	2	20
Tert-butyl ethyl ether	25.0	25.2		ug/L		101	70 - 130	1	20
tert-Butylbenzene	25.0	25.5		ug/L		102	70 - 130	4	20
Tetrachloroethene	25.0	28.8		ug/L		115	70 - 130	2	20
Tetrahydrofuran	125	122		ug/L		97	70 - 130	5	20
Toluene	25.0	26.9		ug/L		108	70 - 130	3	20
trans-1,2-Dichloroethene	25.0	26.4		ug/L		106	70 - 130	2	20
trans-1,3-Dichloropropene	25.0	26.3		ug/L		105	70 - 130	2	20
Trichloroethene	25.0	26.8		ug/L		107	70 - 130	2	20
Trichlorofluoromethane	25.0	25.3		ug/L		101	70 - 130	2	20
Vinyl chloride	25.0	26.4		ug/L		106	70 - 130	0	20
Dibromomethane	25.0	25.3		ug/L		101	70 - 130	3	20

Surrogate	*LCSD %Recovery*	*LCSD Qualifier*	*Limits*
Toluene-d8 (Surr)	*118*		*70 - 130*
1,2-Dichloroethane-d4 (Surr)	*105*		*70 - 130*
4-Bromofluorobenzene (Surr)	*118*		*70 - 130*

Method: 8260C - Volatile Organic Compounds (GC/MS) (Continued)

Lab Sample ID: MB 480-99480/7
Matrix: Solid
Analysis Batch: 99480

Client Sample ID: Method Blank
Prep Type: Total/NA

Analyte	MB Result	MB Qualifier	RL	MDL	Unit	D	Prepared	Analyzed	Dil Fac
1,1,1,2-Tetrachloroethane	ND		2.5		ug/Kg			01/15/13 02:10	1
1,1,1-Trichloroethane	ND		2.5		ug/Kg			01/15/13 02:10	1
1,1,2,2-Tetrachloroethane	ND		2.5		ug/Kg			01/15/13 02:10	1
1,1,2-Trichloroethane	ND		2.5		ug/Kg			01/15/13 02:10	1
1,1-Dichloroethane	ND		2.5		ug/Kg			01/15/13 02:10	1
1,1-Dichloroethene	ND		2.5		ug/Kg			01/15/13 02:10	1
1,1-Dichloropropene	ND		2.5		ug/Kg			01/15/13 02:10	1
1,2,3-Trichlorobenzene	ND		2.5		ug/Kg			01/15/13 02:10	1
1,2,3-Trichloropropane	ND		2.5		ug/Kg			01/15/13 02:10	1
1,2,4-Trichlorobenzene	ND		2.5		ug/Kg			01/15/13 02:10	1
1,2,4-Trimethylbenzene	ND		2.5		ug/Kg			01/15/13 02:10	1
1,2-Dibromo-3-Chloropropane	ND		25		ug/Kg			01/15/13 02:10	1
1,2-Dichlorobenzene	ND		2.5		ug/Kg			01/15/13 02:10	1
1,2-Dichloroethane	ND		2.5		ug/Kg			01/15/13 02:10	1
1,2-Dichloropropane	ND		2.5		ug/Kg			01/15/13 02:10	1
1,3,5-Trimethylbenzene	ND		2.5		ug/Kg			01/15/13 02:10	1
1,3-Dichlorobenzene	ND		2.5		ug/Kg			01/15/13 02:10	1
1,3-Dichloropropane	ND		2.5		ug/Kg			01/15/13 02:10	1
1,4-Dichlorobenzene	ND		2.5		ug/Kg			01/15/13 02:10	1
1,4-Dioxane	ND		250		ug/Kg			01/15/13 02:10	1
2,2-Dichloropropane	ND		2.5		ug/Kg			01/15/13 02:10	1
2-Butanone (MEK)	ND		25		ug/Kg			01/15/13 02:10	1
2-Chlorotoluene	ND		2.5		ug/Kg			01/15/13 02:10	1
2-Hexanone	ND		25		ug/Kg			01/15/13 02:10	1
4-Chlorotoluene	ND		2.5		ug/Kg			01/15/13 02:10	1
4-Isopropyltoluene	ND		2.5		ug/Kg			01/15/13 02:10	1
4-Methyl-2-pentanone (MIBK)	ND		25		ug/Kg			01/15/13 02:10	1
Acetone	ND		250		ug/Kg			01/15/13 02:10	1
Benzene	ND		2.5		ug/Kg			01/15/13 02:10	1
Bromobenzene	ND		2.5		ug/Kg			01/15/13 02:10	1
Bromoform	ND		2.5		ug/Kg			01/15/13 02:10	1
Bromomethane	ND		5.0		ug/Kg			01/15/13 02:10	1
Carbon disulfide	ND		2.5		ug/Kg			01/15/13 02:10	1
Carbon tetrachloride	ND		2.5		ug/Kg			01/15/13 02:10	1
Chlorobenzene	ND		2.5		ug/Kg			01/15/13 02:10	1
Chlorobromomethane	ND		2.5		ug/Kg			01/15/13 02:10	1
Chlorodibromomethane	ND		2.5		ug/Kg			01/15/13 02:10	1
Chloroethane	ND		5.0		ug/Kg			01/15/13 02:10	1
Chloroform	ND		2.5		ug/Kg			01/15/13 02:10	1
Chloromethane	ND		5.0		ug/Kg			01/15/13 02:10	1
cis-1,2-Dichloroethene	ND		2.5		ug/Kg			01/15/13 02:10	1
cis-1,3-Dichloropropene	ND		2.5		ug/Kg			01/15/13 02:10	1
Dichlorobromomethane	ND		2.5		ug/Kg			01/15/13 02:10	1
Dichlorodifluoromethane	ND		5.0		ug/Kg			01/15/13 02:10	1
Ethyl ether	ND		2.5		ug/Kg			01/15/13 02:10	1
Ethylbenzene	ND		2.5		ug/Kg			01/15/13 02:10	1
Ethylene Dibromide	ND		2.5		ug/Kg			01/15/13 02:10	1
Hexachlorobutadiene	ND		2.5		ug/Kg			01/15/13 02:10	1

Method: 8260C - Volatile Organic Compounds (GC/MS) (Continued)

Lab Sample ID: MB 480-99480/7
Matrix: Solid
Analysis Batch: 99480

Client Sample ID: Method Blank
Prep Type: Total/NA

Analyte	MB Result	MB Qualifier	RL	MDL	Unit	D	Prepared	Analyzed	Dil Fac
Isopropyl ether	ND		2.5		ug/Kg			01/15/13 02:10	1
Isopropylbenzene	ND		2.5		ug/Kg			01/15/13 02:10	1
Methyl tert-butyl ether	ND		2.5		ug/Kg			01/15/13 02:10	1
Methylene Chloride	ND		2.5		ug/Kg			01/15/13 02:10	1
m-Xylene & p-Xylene	ND		5.0		ug/Kg			01/15/13 02:10	1
Naphthalene	ND		25		ug/Kg			01/15/13 02:10	1
n-Butylbenzene	ND		2.5		ug/Kg			01/15/13 02:10	1
N-Propylbenzene	ND		2.5		ug/Kg			01/15/13 02:10	1
o-Xylene	ND		2.5		ug/Kg			01/15/13 02:10	1
sec-Butylbenzene	ND		2.5		ug/Kg			01/15/13 02:10	1
Styrene	ND		2.5		ug/Kg			01/15/13 02:10	1
Tert-amyl methyl ether	ND		2.5		ug/Kg			01/15/13 02:10	1
Tert-butyl ethyl ether	ND		2.5		ug/Kg			01/15/13 02:10	1
tert-Butylbenzene	ND		2.5		ug/Kg			01/15/13 02:10	1
Tetrachloroethene	ND		2.5		ug/Kg			01/15/13 02:10	1
Tetrahydrofuran	ND		50		ug/Kg			01/15/13 02:10	1
Toluene	ND		2.5		ug/Kg			01/15/13 02:10	1
trans-1,2-Dichloroethene	ND		2.5		ug/Kg			01/15/13 02:10	1
trans-1,3-Dichloropropene	ND		2.5		ug/Kg			01/15/13 02:10	1
Trichloroethene	ND		2.5		ug/Kg			01/15/13 02:10	1
Trichlorofluoromethane	ND		5.0		ug/Kg			01/15/13 02:10	1
Vinyl chloride	ND		2.5		ug/Kg			01/15/13 02:10	1
Dibromomethane	ND		2.5		ug/Kg			01/15/13 02:10	1

Surrogate	*MB %Recovery*	*MB Qualifier*	*Limits*	*Prepared*	*Analyzed*	*Dil Fac*
Toluene-d8 (Surr)	*87*		*70 - 130*		*01/15/13 02:10*	*1*
1,2-Dichloroethane-d4 (Surr)	*87*		*70 - 130*		*01/15/13 02:10*	*1*
4-Bromofluorobenzene (Surr)	*84*		*70 - 130*		*01/15/13 02:10*	*1*

Lab Sample ID: LCS 480-99480/5
Matrix: Solid
Analysis Batch: 99480

Client Sample ID: Lab Control Sample
Prep Type: Total/NA

Analyte	Spike Added	LCS Result	LCS Qualifier	Unit	D	%Rec	%Rec. Limits
1,1,1,2-Tetrachloroethane	50.0	53.2		ug/Kg		106	70 - 130
1,1,1-Trichloroethane	50.0	52.9		ug/Kg		106	70 - 130
1,1,2,2-Tetrachloroethane	50.0	50.9		ug/Kg		102	70 - 130
1,1,2-Trichloroethane	50.0	52.1		ug/Kg		104	70 - 130
1,1-Dichloroethane	50.0	51.6		ug/Kg		103	70 - 130
1,1-Dichloroethene	50.0	50.7		ug/Kg		101	70 - 130
1,1-Dichloropropene	50.0	51.7		ug/Kg		103	70 - 130
1,2,3-Trichlorobenzene	50.0	53.1		ug/Kg		106	70 - 130
1,2,3-Trichloropropane	50.0	49.5		ug/Kg		99	70 - 130
1,2,4-Trichlorobenzene	50.0	51.9		ug/Kg		104	70 - 130
1,2,4-Trimethylbenzene	50.0	46.3		ug/Kg		93	70 - 130
1,2-Dibromo-3-Chloropropane	50.0	48.4		ug/Kg		97	70 - 130
1,2-Dichlorobenzene	50.0	48.1		ug/Kg		96	70 - 130
1,2-Dichloroethane	50.0	53.1		ug/Kg		106	70 - 130

Method: 8260C - Volatile Organic Compounds (GC/MS) (Continued)

Lab Sample ID: LCS 480-99480/5
Matrix: Solid
Analysis Batch: 99480

Client Sample ID: Lab Control Sample
Prep Type: Total/NA

Analyte	Spike Added	LCS Result	LCS Qualifier	Unit	D	%Rec	%Rec. Limits
1,2-Dichloropropane	50.0	51.9		ug/Kg		104	70 - 130
1,3,5-Trimethylbenzene	50.0	47.6		ug/Kg		95	70 - 130
1,3-Dichlorobenzene	50.0	47.7		ug/Kg		95	70 - 130
1,3-Dichloropropane	50.0	50.0		ug/Kg		100	70 - 130
1,4-Dichlorobenzene	50.0	46.2		ug/Kg		92	70 - 130
1,4-Dioxane	2000	1450		ug/Kg		73	70 - 130
2,2-Dichloropropane	50.0	52.1		ug/Kg		104	70 - 130
2-Butanone (MEK)	250	329	*	ug/Kg		132	70 - 130
2-Chlorotoluene	50.0	49.1		ug/Kg		98	70 - 130
2-Hexanone	250	238		ug/Kg		95	70 - 130
4-Chlorotoluene	50.0	51.6		ug/Kg		103	70 - 130
4-Isopropyltoluene	50.0	49.2		ug/Kg		98	70 - 130
4-Methyl-2-pentanone (MIBK)	250	240		ug/Kg		96	70 - 130
Acetone	250	ND		ug/Kg		90	70 - 130
Benzene	50.0	49.3		ug/Kg		99	70 - 130
Bromobenzene	50.0	48.7		ug/Kg		97	70 - 130
Bromoform	50.0	47.3		ug/Kg		95	70 - 130
Bromomethane	50.0	67.7	*	ug/Kg		135	70 - 130
Carbon disulfide	50.0	52.8		ug/Kg		106	70 - 130
Carbon tetrachloride	50.0	54.2		ug/Kg		108	70 - 130
Chlorobenzene	50.0	48.5		ug/Kg		97	70 - 130
Chlorobromomethane	50.0	53.4		ug/Kg		107	70 - 130
Chlorodibromomethane	50.0	48.6		ug/Kg		97	70 - 130
Chloroethane	50.0	62.2		ug/Kg		124	70 - 130
Chloroform	50.0	51.2		ug/Kg		102	70 - 130
Chloromethane	50.0	46.7		ug/Kg		93	70 - 130
cis-1,2-Dichloroethene	50.0	50.3		ug/Kg		101	70 - 130
cis-1,3-Dichloropropene	50.0	56.0		ug/Kg		112	70 - 130
Dichlorobromomethane	50.0	56.4		ug/Kg		113	70 - 130
Dichlorodifluoromethane	100	90.8		ug/Kg		91	70 - 130
Ethyl ether	50.0	45.3		ug/Kg		91	70 - 130
Ethylbenzene	50.0	48.0		ug/Kg		96	70 - 130
Ethylene Dibromide	50.0	51.8		ug/Kg		104	70 - 130
Hexachlorobutadiene	50.0	49.8		ug/Kg		100	70 - 130
Isopropyl ether	50.0	47.4		ug/Kg		95	70 - 130
Isopropylbenzene	50.0	47.7		ug/Kg		95	70 - 130
Methyl tert-butyl ether	50.0	51.9		ug/Kg		104	70 - 130
Methylene Chloride	50.0	48.5		ug/Kg		97	70 - 130
m-Xylene & p-Xylene	100	95.3		ug/Kg		95	70 - 130
Naphthalene	50.0	49.0		ug/Kg		98	70 - 130
n-Butylbenzene	50.0	49.1		ug/Kg		98	70 - 130
N-Propylbenzene	50.0	47.7		ug/Kg		95	70 - 130
o-Xylene	50.0	48.8		ug/Kg		98	70 - 130
sec-Butylbenzene	50.0	48.4		ug/Kg		97	70 - 130
Styrene	50.0	51.0		ug/Kg		102	70 - 130
Tert-amyl methyl ether	50.0	56.0		ug/Kg		112	70 - 130
Tert-butyl ethyl ether	50.0	52.7		ug/Kg		105	70 - 130
tert-Butylbenzene	50.0	48.6		ug/Kg		97	70 - 130

Method: 8260C - Volatile Organic Compounds (GC/MS) (Continued)

Lab Sample ID: LCS 480-99480/5
Matrix: Solid
Analysis Batch: 99480

Client Sample ID: Lab Control Sample
Prep Type: Total/NA

Analyte	Spike Added	LCS Result	LCS Qualifier	Unit	D	%Rec	%Rec. Limits
Tetrachloroethene	50.0	54.3		ug/Kg		109	70 - 130
Tetrahydrofuran	250	241		ug/Kg		96	70 - 130
Toluene	50.0	47.7		ug/Kg		95	70 - 130
trans-1,2-Dichloroethene	50.0	50.4		ug/Kg		101	70 - 130
trans-1,3-Dichloropropene	50.0	53.9		ug/Kg		108	70 - 130
Trichloroethene	50.0	51.4		ug/Kg		103	70 - 130
Trichlorofluoromethane	50.0	48.9		ug/Kg		98	70 - 130
Vinyl chloride	50.0	48.4		ug/Kg		97	70 - 130
Dibromomethane	50.0	53.5		ug/Kg		107	70 - 130

Surrogate	*LCS %Recovery*	*LCS Qualifier*	*Limits*
Toluene-d8 (Surr)	*86*		*70 - 130*
1,2-Dichloroethane-d4 (Surr)	*88*		*70 - 130*
4-Bromofluorobenzene (Surr)	*83*		*70 - 130*

Lab Sample ID: LCSD 480-99480/6
Matrix: Solid
Analysis Batch: 99480

Client Sample ID: Lab Control Sample Dup
Prep Type: Total/NA

Analyte	Spike Added	LCSD Result	LCSD Qualifier	Unit	D	%Rec	%Rec. Limits	RPD	RPD Limit
1,1,1,2-Tetrachloroethane	50.0	54.5		ug/Kg		109	70 - 130	2	20
1,1,1-Trichloroethane	50.0	53.8		ug/Kg		108	70 - 130	2	20
1,1,2,2-Tetrachloroethane	50.0	53.3		ug/Kg		107	70 - 130	5	20
1,1,2-Trichloroethane	50.0	52.6		ug/Kg		105	70 - 130	1	20
1,1-Dichloroethane	50.0	53.7		ug/Kg		107	70 - 130	4	20
1,1-Dichloroethene	50.0	53.0		ug/Kg		106	70 - 130	5	20
1,1-Dichloropropene	50.0	53.3		ug/Kg		107	70 - 130	3	20
1,2,3-Trichlorobenzene	50.0	55.3		ug/Kg		111	70 - 130	4	20
1,2,3-Trichloropropane	50.0	52.7		ug/Kg		105	70 - 130	6	20
1,2,4-Trichlorobenzene	50.0	54.0		ug/Kg		108	70 - 130	4	20
1,2,4-Trimethylbenzene	50.0	47.7		ug/Kg		95	70 - 130	3	20
1,2-Dibromo-3-Chloropropane	50.0	53.2		ug/Kg		106	70 - 130	9	20
1,2-Dichlorobenzene	50.0	49.6		ug/Kg		99	70 - 130	3	20
1,2-Dichloroethane	50.0	54.4		ug/Kg		109	70 - 130	2	20
1,2-Dichloropropane	50.0	53.4		ug/Kg		107	70 - 130	3	20
1,3,5-Trimethylbenzene	50.0	48.8		ug/Kg		98	70 - 130	2	20
1,3-Dichlorobenzene	50.0	49.0		ug/Kg		98	70 - 130	3	20
1,3-Dichloropropane	50.0	51.5		ug/Kg		103	70 - 130	3	20
1,4-Dichlorobenzene	50.0	48.1		ug/Kg		96	70 - 130	4	20
1,4-Dioxane	2000	1700		ug/Kg		85	70 - 130	16	20
2,2-Dichloropropane	50.0	53.5		ug/Kg		107	70 - 130	3	20
2-Butanone (MEK)	250	366	*	ug/Kg		146	70 - 130	11	20
2-Chlorotoluene	50.0	50.3		ug/Kg		101	70 - 130	3	20
2-Hexanone	250	259		ug/Kg		104	70 - 130	9	20
4-Chlorotoluene	50.0	53.6		ug/Kg		107	70 - 130	4	20
4-Isopropyltoluene	50.0	50.5		ug/Kg		101	70 - 130	3	20
4-Methyl-2-pentanone (MIBK)	250	258		ug/Kg		103	70 - 130	7	20
Acetone	250	257		ug/Kg		103	70 - 130	13	20

Method: 8260C - Volatile Organic Compounds (GC/MS) (Continued)

Lab Sample ID: LCSD 480-99480/6
Matrix: Solid
Analysis Batch: 99480

Client Sample ID: Lab Control Sample Dup
Prep Type: Total/NA

Analyte	Spike Added	LCSD Result	LCSD Qualifier	Unit	D	%Rec	%Rec. Limits	RPD	RPD Limit
Benzene	50.0	50.9		ug/Kg		102	70 - 130	3	20
Bromobenzene	50.0	50.4		ug/Kg		101	70 - 130	3	20
Bromoform	50.0	48.9		ug/Kg		98	70 - 130	3	20
Bromomethane	50.0	59.6		ug/Kg		119	70 - 130	13	20
Carbon disulfide	50.0	53.7		ug/Kg		107	70 - 130	2	20
Carbon tetrachloride	50.0	56.1		ug/Kg		112	70 - 130	3	20
Chlorobenzene	50.0	49.7		ug/Kg		99	70 - 130	2	20
Chlorobromomethane	50.0	55.3		ug/Kg		111	70 - 130	4	20
Chlorodibromomethane	50.0	50.5		ug/Kg		101	70 - 130	4	20
Chloroethane	50.0	63.5		ug/Kg		127	70 - 130	2	20
Chloroform	50.0	52.4		ug/Kg		105	70 - 130	2	20
Chloromethane	50.0	48.8		ug/Kg		98	70 - 130	4	20
cis-1,2-Dichloroethene	50.0	52.6		ug/Kg		105	70 - 130	5	20
cis-1,3-Dichloropropene	50.0	58.3		ug/Kg		117	70 - 130	4	20
Dichlorobromomethane	50.0	57.6		ug/Kg		115	70 - 130	2	20
Dichlorodifluoromethane	100	92.2		ug/Kg		92	70 - 130	2	20
Ethyl ether	50.0	48.8		ug/Kg		98	70 - 130	7	20
Ethylbenzene	50.0	49.0		ug/Kg		98	70 - 130	2	20
Ethylene Dibromide	50.0	53.4		ug/Kg		107	70 - 130	3	20
Hexachlorobutadiene	50.0	51.3		ug/Kg		103	70 - 130	3	20
Isopropyl ether	50.0	50.1		ug/Kg		100	70 - 130	6	20
Isopropylbenzene	50.0	49.4		ug/Kg		99	70 - 130	4	20
Methyl tert-butyl ether	50.0	54.3		ug/Kg		109	70 - 130	5	20
Methylene Chloride	50.0	50.2		ug/Kg		100	70 - 130	3	20
m-Xylene & p-Xylene	100	98.1		ug/Kg		98	70 - 130	3	20
Naphthalene	50.0	51.9		ug/Kg		104	70 - 130	6	20
n-Butylbenzene	50.0	50.5		ug/Kg		101	70 - 130	3	20
N-Propylbenzene	50.0	49.4		ug/Kg		99	70 - 130	3	20
o-Xylene	50.0	50.2		ug/Kg		100	70 - 130	3	20
sec-Butylbenzene	50.0	50.2		ug/Kg		100	70 - 130	4	20
Styrene	50.0	52.5		ug/Kg		105	70 - 130	3	20
Tert-amyl methyl ether	50.0	58.3		ug/Kg		117	70 - 130	4	20
Tert-butyl ethyl ether	50.0	54.3		ug/Kg		109	70 - 130	3	20
tert-Butylbenzene	50.0	50.0		ug/Kg		100	70 - 130	3	20
Tetrachloroethene	50.0	56.3		ug/Kg		113	70 - 130	4	20
Tetrahydrofuran	250	270		ug/Kg		108	70 - 130	12	20
Toluene	50.0	48.8		ug/Kg		98	70 - 130	2	20
trans-1,2-Dichloroethene	50.0	52.5		ug/Kg		105	70 - 130	4	20
trans-1,3-Dichloropropene	50.0	56.0		ug/Kg		112	70 - 130	4	20
Trichloroethene	50.0	53.7		ug/Kg		107	70 - 130	4	20
Trichlorofluoromethane	50.0	49.9		ug/Kg		100	70 - 130	2	20
Vinyl chloride	50.0	51.0		ug/Kg		102	70 - 130	5	20
Dibromomethane	50.0	55.5		ug/Kg		111	70 - 130	4	20

Surrogate	*LCSD %Recovery*	*LCSD Qualifier*	*Limits*
Toluene-d8 (Surr)	*86*		*70 - 130*
1,2-Dichloroethane-d4 (Surr)	*89*		*70 - 130*
4-Bromofluorobenzene (Surr)	*85*		*70 - 130*

QC Association Summary

Client: ERM-Northeast
Project/Site: IDS Wayland

TestAmerica Job ID: 480-31512-1

GC/MS VOA

Analysis Batch: 99400

Lab Sample ID	Client Sample ID	Prep Type	Matrix	Method	Prep Batch
480-31512-1	MW-1027-20130111-01	Total/NA	Water	8260C	
480-31512-2	MW-1028-20130111-01	Total/NA	Water	8260C	
480-31512-3	MW-1033-20130111-01	Total/NA	Water	8260C	
480-31512-4	MW-1034-20130111-01	Total/NA	Water	8260C	
480-31512-5	DUP-001-20130111-01	Total/NA	Water	8260C	
480-31512-8	TB-001-2013111-01	Total/NA	Water	8260C	
LCS 480-99400/4	Lab Control Sample	Total/NA	Water	8260C	
LCSD 480-99400/6	Lab Control Sample Dup	Total/NA	Water	8260C	
MB 480-99400/5	Method Blank	Total/NA	Water	8260C	

Analysis Batch: 99480

Lab Sample ID	Client Sample ID	Prep Type	Matrix	Method	Prep Batch
480-31512-6	MW-1004-20130111-01	Total/NA	Solid	8260C	99489
480-31512-7	MW-1008-20130111-01	Total/NA	Solid	8260C	99489
LCS 480-99480/5	Lab Control Sample	Total/NA	Solid	8260C	
LCSD 480-99480/6	Lab Control Sample Dup	Total/NA	Solid	8260C	
MB 480-99480/7	Method Blank	Total/NA	Solid	8260C	

Prep Batch: 99489

Lab Sample ID	Client Sample ID	Prep Type	Matrix	Method	Prep Batch
480-31512-6	MW-1004-20130111-01	Total/NA	Solid	5035	
480-31512-7	MW-1008-20130111-01	Total/NA	Solid	5035	

General Chemistry

Analysis Batch: 99424

Lab Sample ID	Client Sample ID	Prep Type	Matrix	Method	Prep Batch
480-31512-6	MW-1004-20130111-01	Total/NA	Solid	Moisture	
480-31512-7	MW-1008-20130111-01	Total/NA	Solid	Moisture	

Lab Chronicle

Client: ERM-Northeast
Project/Site: IDS Wayland

TestAmerica Job ID: 480-31512-1

Client Sample ID: MW-1027-20130111-01 — Lab Sample ID: 480-31512-1

Date Collected: 01/11/13 10:15 — **Matrix: Water**
Date Received: 01/12/13 10:15

Prep Type	Batch Type	Batch Method	Run	Dilution Factor	Batch Number	Prepared or Analyzed	Analyst	Lab
Total/NA	Analysis	8260C		1	99400	01/14/13 20:10	LH	TAL BUF

Client Sample ID: MW-1028-20130111-01 — Lab Sample ID: 480-31512-2

Date Collected: 01/11/13 10:22 — **Matrix: Water**
Date Received: 01/12/13 10:15

Prep Type	Batch Type	Batch Method	Run	Dilution Factor	Batch Number	Prepared or Analyzed	Analyst	Lab
Total/NA	Analysis	8260C		1	99400	01/14/13 20:33	LH	TAL BUF

Client Sample ID: MW-1033-20130111-01 — Lab Sample ID: 480-31512-3

Date Collected: 01/11/13 10:28 — **Matrix: Water**
Date Received: 01/12/13 10:15

Prep Type	Batch Type	Batch Method	Run	Dilution Factor	Batch Number	Prepared or Analyzed	Analyst	Lab
Total/NA	Analysis	8260C		1	99400	01/14/13 20:57	LH	TAL BUF

Client Sample ID: MW-1034-20130111-01 — Lab Sample ID: 480-31512-4

Date Collected: 01/11/13 10:00 — **Matrix: Water**
Date Received: 01/12/13 10:15

Prep Type	Batch Type	Batch Method	Run	Dilution Factor	Batch Number	Prepared or Analyzed	Analyst	Lab
Total/NA	Analysis	8260C		1	99400	01/14/13 21:21	LH	TAL BUF

Client Sample ID: DUP-001-20130111-01 — Lab Sample ID: 480-31512-5

Date Collected: 01/11/13 11:11 — **Matrix: Water**
Date Received: 01/12/13 10:15

Prep Type	Batch Type	Batch Method	Run	Dilution Factor	Batch Number	Prepared or Analyzed	Analyst	Lab
Total/NA	Analysis	8260C		1	99400	01/14/13 21:45	LH	TAL BUF

Client Sample ID: MW-1004-20130111-01 — Lab Sample ID: 480-31512-6

Date Collected: 01/11/13 08:20 — **Matrix: Solid**
Date Received: 01/12/13 10:15 — **Percent Solids: 93.8**

Prep Type	Batch Type	Batch Method	Run	Dilution Factor	Batch Number	Prepared or Analyzed	Analyst	Lab
Total/NA	Prep	5035			99489	01/15/13 00:06	CDC	TAL BUF
Total/NA	Analysis	8260C		1	99480	01/15/13 02:52	JMB	TAL BUF
Total/NA	Analysis	Moisture		1	99424	01/14/13 13:39	ZR	TAL BUF

Lab Chronicle

Client: ERM-Northeast
Project/Site: IDS Wayland

TestAmerica Job ID: 480-31512-1

Client Sample ID: MW-1008-20130111-01

Lab Sample ID: 480-31512-7

Date Collected: 01/11/13 11:30
Matrix: Solid
Date Received: 01/12/13 10:15
Percent Solids: 91.7

Prep Type	Batch Type	Batch Method	Run	Dilution Factor	Batch Number	Prepared or Analyzed	Analyst	Lab
Total/NA	Prep	5035			99489	01/15/13 00:06	CDC	TAL BUF
Total/NA	Analysis	8260C		1	99480	01/15/13 03:17	JMB	TAL BUF
Total/NA	Analysis	Moisture		1	99424	01/14/13 13:39	ZR	TAL BUF

Client Sample ID: TB-001-2013111-01

Lab Sample ID: 480-31512-8

Date Collected: 01/11/13 08:00
Matrix: Water
Date Received: 01/12/13 10:15

Prep Type	Batch Type	Batch Method	Run	Dilution Factor	Batch Number	Prepared or Analyzed	Analyst	Lab
Total/NA	Analysis	8260C		1	99400	01/14/13 22:08	LH	TAL BUF

Laboratory References:

TAL BUF = TestAmerica Buffalo, 10 Hazelwood Drive, Amherst, NY 14228-2298, TEL (716)691-2600

Certification Summary

Client: ERM-Northeast
Project/Site: IDS Wayland

TestAmerica Job ID: 480-31512-1

Laboratory: TestAmerica Buffalo

All certifications held by this laboratory are listed. Not all certifications are applicable to this report.

Authority	Program	EPA Region	Certification ID	Expiration Date
Arkansas DEQ	State Program	6	88-0686	07-06-13
California	NELAP	9	1169CA	09-30-13
Connecticut	State Program	1	PH-0568	09-30-14
Florida	NELAP	4	E87672	06-30-13
Georgia	State Program	4	N/A	03-31-13
Georgia	State Program	4	956	06-30-13
Georgia	State Program	4	956	06-30-13
Illinois	NELAP	5	200003	09-30-13
Iowa	State Program	7	374	03-01-13
Kansas	NELAP	7	E-10187	01-31-13
Kentucky	State Program	4	90029	12-31-12
Kentucky (UST)	State Program	4	30	04-01-13
Louisiana	NELAP	6	02031	06-30-13
Maine	State Program	1	NY00044	12-04-13
Maryland	State Program	3	294	03-31-13
Massachusetts	State Program	1	M-NY044	06-30-13
Michigan	State Program	5	9937	04-01-13
Minnesota	NELAP	5	036-999-337	12-31-13
New Hampshire	NELAP	1	2973	09-11-13
New Hampshire	NELAP	1	2337	11-17-13
New Jersey	NELAP	2	NY455	06-30-13
New York	NELAP	2	10026	03-31-13
North Dakota	State Program	8	R-176	03-31-13
Oklahoma	State Program	6	9421	08-31-13
Oregon	NELAP	10	NY200003	06-09-13
Pennsylvania	NELAP	3	68-00281	07-31-13
Rhode Island	State Program	1	LAO00328	12-31-13
Tennessee	State Program	4	TN02970	04-01-13
Texas	NELAP	6	T104704412-11-2	07-31-13
USDA	Federal		P330-11-00386	11-22-14
Virginia	NELAP	3	460185	09-14-13
Washington	State Program	10	C784	02-10-13
West Virginia DEP	State Program	3	252	09-30-13
Wisconsin	State Program	5	998310390	08-31-13

Method Summary

Client: ERM-Northeast
Project/Site: IDS Wayland

TestAmerica Job ID: 480-31512-1

Method	Method Description	Protocol	Laboratory
8260C	Volatile Organic Compounds (GC/MS)	MA DEP	TAL BUF
Moisture	Percent Moisture	EPA	TAL BUF

Protocol References:

EPA = US Environmental Protection Agency

MA DEP = Massachusetts Department Of Environmental Protection

Laboratory References:

TAL BUF = TestAmerica Buffalo, 10 Hazelwood Drive, Amherst, NY 14228-2298, TEL (716)691-2600

Sample Summary

Client: ERM-Northeast
Project/Site: IDS Wayland

TestAmerica Job ID: 480-31512-1

Lab Sample ID	Client Sample ID	Matrix	Collected	Received
480-31512-1	MW-1027-20130111-01	Water	01/11/13 10:15	01/12/13 10:15
480-31512-2	MW-1028-20130111-01	Water	01/11/13 10:22	01/12/13 10:15
480-31512-3	MW-1033-20130111-01	Water	01/11/13 10:28	01/12/13 10:15
480-31512-4	MW-1034-20130111-01	Water	01/11/13 10:00	01/12/13 10:15
480-31512-5	DUP-001-20130111-01	Water	01/11/13 11:11	01/12/13 10:15
480-31512-6	MW-1004-20130111-01	Solid	01/11/13 08:20	01/12/13 10:15
480-31512-7	MW-1008-20130111-01	Solid	01/11/13 11:30	01/12/13 10:15
480-31512-8	TB-001-2013111-01	Water	01/11/13 08:00	01/12/13 10:15

Login Sample Receipt Checklist

Client: ERM-Northeast

Job Number: 480-31512-1

Login Number: 31512
List Number: 1
Creator: Kolb, Chris M

List Source: TestAmerica Buffalo

Question	Answer	Comment
Radioactivity either was not measured or, if measured, is at or below background	N/A	
The cooler's custody seal, if present, is intact.	True	
The cooler or samples do not appear to have been compromised or tampered with.	True	
Samples were received on ice.	True	
Cooler Temperature is acceptable.	True	
Cooler Temperature is recorded.	True	
COC is present.	True	
COC is filled out in ink and legible.	True	
COC is filled out with all pertinent information.	True	
Is the Field Sampler's name present on COC?	True	
There are no discrepancies between the sample IDs on the containers and the COC.	True	
Samples are received within Holding Time.	True	
Sample containers have legible labels.	True	
Containers are not broken or leaking.	True	
Sample collection date/times are provided.	True	
Appropriate sample containers are used.	True	
Sample bottles are completely filled.	True	
Sample Preservation Verified	True	
There is sufficient vol. for all requested analyses, incl. any requested MS/MSDs	True	
VOA sample vials do not have headspace or bubble is <6mm (1/4") in diameter.	True	
If necessary, staff have been informed of any short hold time or quick TAT needs	True	
Multiphasic samples are not present.	True	
Samples do not require splitting or compositing.	True	
Sampling Company provided.	True	
Samples received within 48 hours of sampling.	True	
Samples requiring field filtration have been filtered in the field.	N/A	
Chlorine Residual checked.	N/A	

TestAmerica Westfield
Westfield Executive Park 53 Southampton Road
Westfield, MA 01085
Phone (413) 572-4000 Fax (413) 572-3707

Boston Service Center
240 Bear Hill Rd. Suite 104
Waltham, MA 02451
Phone (781) 466-6900 Fax (781) 466-6901

Chain of Custody Record

TestAmerica
THE LEADER IN ENVIRONMENTAL TESTING

Client Information				
Client Contact: Jason Flattery	Sampler: SB . PAB	Lab PM:	Carrier Tracking No(s):	COC No: 22461
	Phone: 978-875-0426	E-Mail:		Page: 1/1
Company: ERM				Job #: 480-31512
Address: 1 Beacon St, 5th Floor	Due Date Requested:			
City: Boston	TAT Requested (days): 7 days			
State, Zip: MA 02108				
Phone: 617-646-7800	Quote #: MSA			
Email: Jason.Flattery@erm.com	PO #:			
Project Name/number: Raytheon 0167058.06	WO #:			
Site: Raytheon Wayland	SSOW#:			

Analysis Requested

Preservation Codes:
A - HCL, B - NaOH, C - Zn Acetate, D - Nitric Acid, E - NaHSO4, F - MeOH, H - Ascorbic Acid, I - Ice, J - DI Water, M - Hexane, N - None, P - Na2O4S, Q - Na2SO3, R - Na2S2SO3, S - H2SO4, Z - other (specify)

Regulatory programs:
MCP [X] GW1/S1 [ ]
RCP [ ] CT RSR [ ]
DEP Form [ ] EDD Required [ ]

Sample Identification	Sample Date	Sample Time	Sample Type (C=comp, G=grab)	Matrix (W=water, S=solid, O=waste/oil, BT=Tissue, A=Air)	Sampler's Initials	Field Filtered Sample?	Perform MS/MSD?	8260B	Total Number of containers	Special Instructions/Note:
			Preservation Code:							
MW-1027-20130111-01	1/11/13	10:15	C	W	SB			X	3	
MW-1028-20130111-01	1/11/13	10:22	C	W	SB			X	3	
MW-1033-20130111-01	1/11/13	10:28	C	W	SB			X	3	
MW-1034-20130111-01	1/11/13	10:00	C	W	SB			X	3	
DUP-001-20130111-01	1/11/13	11:11	C	W	SB			X	3	
MW-1004-20130111-01	1/11/13	8:20	C	S	PAB			X	4	
MW-1008-20130111-01	1/11/13	11:30	C	S	PAB			X	4	
TB-001-20130111-01	1/11/13	8:00	G	~~W~~ J	SB			X (SB)	2	

Possible Hazard Identification
[ ] Non-Hazard [ ] Flammable [X] Skin Irritant [ ] Poison B [ ] Unknown [ ] Radiological

Sample Disposal (A fee may be assessed if samples are retained longer than 1 month)
[ ] Return To Client [X] Disposal By Lab [ ] Archive For _____ Months

Deliverable Requested: I, II, III, IV, Other (specify)

Special Instructions/QC Requirements:

Relinquished by:	Date/Time:	Company	Received by:	Date/Time:	Company
[signature]	1/11/13 12:30	ERM	[signature]	1/11/13 1230	TA
[signature]	1/11/13 1600	TA	[signature]	1/12/13 1015	TA
Relinquished by:	Date/Time:	Company	Received by:	Date/Time:	Company

Custody Seals Intact: Δ Yes Δ No
Custody Seal No.:
Cooler Temperature(s) °C and Other Remarks: 1.8 ICE #2

TAL-8245-360 1111

TestAmerica

THE LEADER IN ENVIRONMENTAL TESTING

ANALYTICAL REPORT

TestAmerica Laboratories, Inc.
TestAmerica Buffalo
10 Hazelwood Drive
Amherst, NY 14228-2298
Tel: (716)691-2600

TestAmerica Job ID: 480-31687-1
Client Project/Site: IDS Wayland

For:
ERM-Northeast
One Beacon Steet
5th Floor
Boston, Massachusetts 02108

Attn: Jason Flattery

Authorized for release by:
1/28/2013 9:40:58 AM

Becky Mason
Project Manager II
becky.mason@testamericainc.com

LINKS

Review your project results through TotalAccess

Have a Question? Ask The Expert

Visit us at: www.testamericainc.com

The test results in this report meet all 2003 NELAC and 2009 TNI requirements for accredited parameters, exceptions are noted in this report. This report may not be reproduced except in full, and with written approval from the laboratory. For questions please contact the Project Manager at the e-mail address or telephone number listed on this page.

This report has been electronically signed and authorized by the signatory. Electronic signature is intended to be the legally binding equivalent of a traditionally handwritten signature.

Results relate only to the items tested and the sample(s) as received by the laboratory.

Table of Contents

Cover Page 1
Table of Contents 2
Definitions/Glossary 3
Case Narrative 4
Detection Summary 7
Client Sample Results 8
Surrogate Summary 17
QC Sample Results 18
QC Association Summary 28
Lab Chronicle 29
Certification Summary 30
Method Summary 31
Sample Summary 32
Receipt Checklists 33
Chain of Custody 34

Definitions/Glossary

Client: ERM-Northeast
Project/Site: IDS Wayland

TestAmerica Job ID: 480-31687-1

Qualifiers

GC/MS VOA

Qualifier	Qualifier Description
*	LCS or LCSD exceeds the control limits
*	RPD of the LCS and LCSD exceeds the control limits

Glossary

Abbreviation	These commonly used abbreviations may or may not be present in this report.
☼	Listed under the "D" column to designate that the result is reported on a dry weight basis
%R	Percent Recovery
CNF	Contains no Free Liquid
DER	Duplicate error ratio (normalized absolute difference)
DL, RA, RE, IN	Indicates a Dilution, Reanalysis, Re-extraction, or additional Initial metals/anion analysis of the sample
DLC	Decision level concentration
EDL	Estimated Detection Limit
EPA	United States Environmental Protection Agency
MDA	Minimum detectable activity
MDC	Minimum detectable concentration
MDL	Method Detection Limit
ML	Minimum Level (Dioxin)
ND	Not detected at the reporting limit (or MDL or EDL if shown)
PQL	Practical Quantitation Limit
QC	Quality Control
RER	Relative error ratio
RL	Reporting Limit or Requested Limit (Radiochemistry)
RPD	Relative Percent Difference, a measure of the relative difference between two points
TEF	Toxicity Equivalent Factor (Dioxin)
TEQ	Toxicity Equivalent Quotient (Dioxin)

Job ID: 480-31687-1

Laboratory: TestAmerica Buffalo

Narrative

Job Narrative
480-31687-1

With the exceptions noted as flags or footnotes, standard analytical protocols were followed in the analysis of the samples and no problems were encountered or anomalies observed. In addition all laboratory quality control samples were within established control limits, with any exceptions noted below. Each sample was analyzed to achieve the lowest possible reporting limit within the constraints of the method. In some cases, due to interference or analytes present at high concentrations, samples were diluted. For diluted samples, the reporting limits are adjusted relative to the dilution required.

Calculations are performed before rounding to avoid round-off errors in calculated results.

All holding times were met and proper preservation noted for the methods performed on these samples, unless otherwise detailed in the individual sections below.

TestAmerica's Reporting Limits (RLs) for this report may not always meet client specified method reporting limits due to various reasons such as methodology, dilutions, matrix or moisture content (soils). TestAmerica's pivot table EDD documents which compound(s) exceed certain regulatory standards. If not included with your deliverables, please contact your Project Manager about the availability of this EDD for your report.

Comments
No additional comments.

Receipt
The samples were received on 1/17/2013 2:10 AM; the samples arrived in good condition, properly preserved and, where required, on ice. The temperature of the cooler at receipt was 3.8º C.

Except:
A trip blank was submitted for analysis with these samples; however, it was not listed on the Chain of Custody (COC).

Note: All samples that require thermal preservation are considered acceptable if the arrival temperature is within the method's specified temperature range or for general analysis, ranging from 6°C to just above the freezing temperature of water. Samples that are hand delivered, immediately following collection, may not meet these criteria; however, they will be considered acceptable according to NELAC and State standards, if there is evidence that the chilling process has begun, such as stored and transported to the laboratory on ice.

GC/MS VOA
With the exception of diluted samples, per question G on the MassDEP Analytical Protocol Certification Form, TestAmerica's routine reporting limits do not achieve the CAM reporting limits specified in this CAM protocol for Carbon Disulfide, Isopropyl Ether, Naphthalene, tert-Butyl Ethyl Ether, tert-Amyl Methyl Ether, & Tetrahydrofuran.

Method 8260C: The continuing calibration verification (CCV) for Toluene-d8 associated with batch 99978 recovered above the MCP upper control limit. MCP protocol allows for 20% of the target compounds to be outside the 20% difference but not over 40% difference.

Method 8260C: The continuing calibration verification (CCV) for 1,4-Dioxane associated with batch 99978 recovered above the MCP upper control limit. MCP protocol allows for 20% of the target compounds to be outside the 20% difference but not over 40% difference, or 60% difference for difficult analytes.

Method 8260C: The laboratory control sample (LCS) and / or the laboratory control sample duplicate (LCSD) for batch 99978 exceeded control limits for the following analytes: 1,4-Dioxane. MCP protocol allows for 10% of the target compounds to be outside of the limits provided the recoveries are over 10%.

Method 8260C: The continuing calibration verification (CCV) for 1,4-Dioxane associated with batch 100158 recovered above the MCP upper control limit. MCP protocol allows for 20% of the target compounds to be outside the 20% difference but not over 40% difference.

Method 8260C: The laboratory control sample (LCS) and / or the laboratory control sample duplicate (LCSD) for batch 100158 exceeded

Job ID: 480-31687-1 (Continued)

Laboratory: TestAmerica Buffalo (Continued)

control limits for the following analytes: 1,4-Dioxane. MCP protocol allows for 10% of the target compounds to be outside of the limits provided the recoveries are over 10%.

No other analytical or quality issues were noted.

MassDEP Analytical Protocol Certification Form

Laboratory Name:	**TestAmerica Buffalo**	Project #:	**480-31687-1**
Project Location:	**Wayland MA**	RTN:	

This form provides certifications for the following data set: list Laboratory Sample ID Number(s):

Matrices: [X] Groundwater/Surface Water [ ] Soil/Sediment [ ] Drinking Water [ ] Air [ ] Other:

CAM Protocols (check all that apply below):

8260 VOC CAM II A [X]	7470/7471 Hg CAM III B [ ]	Mass DEP VPH CAM IV A [ ]	8081 Pesticides CAM V B [ ]	7196 Hex Cr CAM VI B [ ]	Mass DEP APH CAM IX A [ ]
8270 SVOC CAM II B [ ]	7010 Metals CAM III C [ ]	Mass DEP EPH CAM IV B [ ]	8151 Herbicides CAM V C [ ]	8330 Explosives CAM VIII A [ ]	TO-15 VOC CAM IX B [ ]
6010 Metals CAM III A [ ]	6020 Metals CAM III D [ ]	8082 PCB CAM V A [ ]	9014 Total Cyanide/PAC CAM VI A [ ]	6860 Perchlorate CAM VIII B [ ]	

Affirmative Responses to Questions A through F are required for "Presumptive Certainty" status

A	Were all samples received in a condition consistent with those described on the Chain-of-Custody, properly preserved (including temperature) in the field or laboratory, and prepared/analyzed within method holding time.	[X] Yes [ ] No
B	Were the analytical method(s) and all associated QC requirements specified in the selected CAM protocol(s) followed?	[X] Yes [ ] No
C	Were all required corrective actions and analytical response actions specified in the selected CAM protocol(s) implemented for all identified performance standard non-conformances?	[X] Yes [ ] No
D	Does the laboratory report comply with all the reporting requirements specified in CAM VII A, "Quality Assurance and Quality Control Guidelines for the Acquisition and Reporting of Analytical Data"?	[X] Yes [ ] No
E	a. VPH, EPH and APH Methods only: Was each method conducted without significant modification(s)? (Refer to the individual method(s) for a list of significant modifications). b. APH and TO-15 Methods only: Was the complete analyte list reported for each method?	[ ] Yes [ ] No [ ] Yes [ ] No
F	Were all applicable CAM protocol QC and performance standard non-conformances identified and evaluated in a laboratory narrative (including all "No" responses to Questions A through E)?	[X] Yes [ ] No

Responses to Questions G, H and I below are required for "Presumptive Certainty" status

G	Were the reporting limits at or below all CAM reporting limits specified in the selected CAM protocol(s)?	[ ] Yes [X] No[1]

***Data User Note:* Data that achieve "Presumptive Certainty" status may not necessarily meet the data usability and representativeness requirements described in 310 CMR 40. 1056 (2)(k) and WCS-07-350**

H	Were **all** QC performance standards specified in the CAM protocol(s) achieved?	[ ] Yes [X] No[1]
I	Were results reported for the complete analyte list specified in the selected CAM protocol(s) ?	[X] Yes [ ] No[1]

[1] All negative responses must be addressed in an attached laboratory narrative.

I, the undersigned, attest under the pains and penalties of perjury that, based upon my personal inquiry of those responsible for obtaining the information, the material contained in this analytical report is, to the best of my knowledge and belief, is accurate and complete.

Signature:	Becky Mason	Position:	Project Manager
Printed Name:	Becky Mason	Date:	1/28/13 9:37

This form has been electronically signed and approved

Detection Summary

Client: ERM-Northeast
Project/Site: IDS Wayland

TestAmerica Job ID: 480-31687-1

Client Sample ID: CS-01-20130116-01 — Lab Sample ID: 480-31687-1

Analyte	Result	Qualifier	RL	MDL	Unit	Dil Fac	D	Method	Prep Type
cis-1,2-Dichloroethene	3.3		1.0		ug/L	1		8260C	Total/NA
Methyl tert-butyl ether	6.2		1.0		ug/L	1		8260C	Total/NA
Trichloroethene	21		1.0		ug/L	1		8260C	Total/NA

Client Sample ID: CS-02-20130116-01 — Lab Sample ID: 480-31687-2

Analyte	Result	Qualifier	RL	MDL	Unit	Dil Fac	D	Method	Prep Type
cis-1,2-Dichloroethene	1.9		1.0		ug/L	1		8260C	Total/NA
Methyl tert-butyl ether	5.9		1.0		ug/L	1		8260C	Total/NA
Trichloroethene	12		1.0		ug/L	1		8260C	Total/NA

Client Sample ID: CS-03-20130116-01 — Lab Sample ID: 480-31687-3

Analyte	Result	Qualifier	RL	MDL	Unit	Dil Fac	D	Method	Prep Type
cis-1,2-Dichloroethene	2.3		1.0		ug/L	1		8260C	Total/NA
Methyl tert-butyl ether	2.1		1.0		ug/L	1		8260C	Total/NA
Trichloroethene	12		1.0		ug/L	1		8260C	Total/NA

Client Sample ID: Dup-001-20130116-01 — Lab Sample ID: 480-31687-4

Analyte	Result	Qualifier	RL	MDL	Unit	Dil Fac	D	Method	Prep Type
cis-1,2-Dichloroethene	3.0		1.0		ug/L	1		8260C	Total/NA
Methyl tert-butyl ether	5.9		1.0		ug/L	1		8260C	Total/NA
Trichloroethene	20		1.0		ug/L	1		8260C	Total/NA

Client Sample ID: Trip Blank — Lab Sample ID: 480-31687-5

No Detections

This Detection Summary does not include radiochemical test results.

Client Sample Results

Client: ERM-Northeast
Project/Site: IDS Wayland

TestAmerica Job ID: 480-31687-1

Client Sample ID: CS-01-20130116-01

Lab Sample ID: 480-31687-1

Date Collected: 01/16/13 16:30

Matrix: Water

Date Received: 01/17/13 02:10

Method: 8260C - Volatile Organic Compounds (GC/MS)

Analyte	Result	Qualifier	RL	MDL	Unit	D	Prepared	Analyzed	Dil Fac
1,1,1,2-Tetrachloroethane	ND		1.0		ug/L			01/17/13 20:09	1
1,1,1-Trichloroethane	ND		1.0		ug/L			01/17/13 20:09	1
1,1,2,2-Tetrachloroethane	ND		0.50		ug/L			01/17/13 20:09	1
1,1,2-Trichloroethane	ND		1.0		ug/L			01/17/13 20:09	1
1,1-Dichloroethane	ND		1.0		ug/L			01/17/13 20:09	1
1,1-Dichloroethene	ND		1.0		ug/L			01/17/13 20:09	1
1,1-Dichloropropene	ND		1.0		ug/L			01/17/13 20:09	1
1,2,3-Trichlorobenzene	ND		1.0		ug/L			01/17/13 20:09	1
1,2,3-Trichloropropane	ND		1.0		ug/L			01/17/13 20:09	1
1,2,4-Trichlorobenzene	ND		1.0		ug/L			01/17/13 20:09	1
1,2,4-Trimethylbenzene	ND		1.0		ug/L			01/17/13 20:09	1
1,2-Dibromo-3-Chloropropane	ND		5.0		ug/L			01/17/13 20:09	1
1,2-Dichlorobenzene	ND		1.0		ug/L			01/17/13 20:09	1
1,2-Dichloroethane	ND		1.0		ug/L			01/17/13 20:09	1
1,2-Dichloropropane	ND		1.0		ug/L			01/17/13 20:09	1
1,3,5-Trimethylbenzene	ND		1.0		ug/L			01/17/13 20:09	1
1,3-Dichlorobenzene	ND		1.0		ug/L			01/17/13 20:09	1
1,3-Dichloropropane	ND		1.0		ug/L			01/17/13 20:09	1
1,4-Dichlorobenzene	ND		1.0		ug/L			01/17/13 20:09	1
1,4-Dioxane	ND	*	50		ug/L			01/17/13 20:09	1
2,2-Dichloropropane	ND		1.0		ug/L			01/17/13 20:09	1
2-Butanone (MEK)	ND		10		ug/L			01/17/13 20:09	1
2-Chlorotoluene	ND		1.0		ug/L			01/17/13 20:09	1
2-Hexanone	ND		10		ug/L			01/17/13 20:09	1
4-Chlorotoluene	ND		1.0		ug/L			01/17/13 20:09	1
4-Isopropyltoluene	ND		1.0		ug/L			01/17/13 20:09	1
4-Methyl-2-pentanone (MIBK)	ND		10		ug/L			01/17/13 20:09	1
Acetone	ND		50		ug/L			01/17/13 20:09	1
Benzene	ND		1.0		ug/L			01/17/13 20:09	1
Bromobenzene	ND		1.0		ug/L			01/17/13 20:09	1
Bromoform	ND		1.0		ug/L			01/17/13 20:09	1
Bromomethane	ND		2.0		ug/L			01/17/13 20:09	1
Carbon disulfide	ND		10		ug/L			01/17/13 20:09	1
Carbon tetrachloride	ND		1.0		ug/L			01/17/13 20:09	1
Chlorobenzene	ND		1.0		ug/L			01/17/13 20:09	1
Chlorobromomethane	ND		1.0		ug/L			01/17/13 20:09	1
Chlorodibromomethane	ND		0.50		ug/L			01/17/13 20:09	1
Chloroethane	ND		2.0		ug/L			01/17/13 20:09	1
Chloroform	ND		1.0		ug/L			01/17/13 20:09	1
Chloromethane	ND		2.0		ug/L			01/17/13 20:09	1
cis-1,2-Dichloroethene	**3.3**		1.0		ug/L			01/17/13 20:09	1
cis-1,3-Dichloropropene	ND		0.40		ug/L			01/17/13 20:09	1
Dichlorobromomethane	ND		0.50		ug/L			01/17/13 20:09	1
Dichlorodifluoromethane	ND		1.0		ug/L			01/17/13 20:09	1
Ethyl ether	ND		1.0		ug/L			01/17/13 20:09	1
Ethylbenzene	ND		1.0		ug/L			01/17/13 20:09	1
Ethylene Dibromide	ND		1.0		ug/L			01/17/13 20:09	1
Hexachlorobutadiene	ND		0.40		ug/L			01/17/13 20:09	1
Isopropyl ether	ND		10		ug/L			01/17/13 20:09	1

Client Sample ID: CS-01-20130116-01

Lab Sample ID: 480-31687-1

Date Collected: 01/16/13 16:30

Matrix: Water

Date Received: 01/17/13 02:10

Method: 8260C - Volatile Organic Compounds (GC/MS) (Continued)

Analyte	Result	Qualifier	RL	MDL	Unit	D	Prepared	Analyzed	Dil Fac
Isopropylbenzene	ND		1.0		ug/L			01/17/13 20:09	1
Methyl tert-butyl ether	**6.2**		1.0		ug/L			01/17/13 20:09	1
Methylene Chloride	ND		1.0		ug/L			01/17/13 20:09	1
m-Xylene & p-Xylene	ND		2.0		ug/L			01/17/13 20:09	1
Naphthalene	ND		5.0		ug/L			01/17/13 20:09	1
n-Butylbenzene	ND		1.0		ug/L			01/17/13 20:09	1
N-Propylbenzene	ND		1.0		ug/L			01/17/13 20:09	1
o-Xylene	ND		1.0		ug/L			01/17/13 20:09	1
sec-Butylbenzene	ND		1.0		ug/L			01/17/13 20:09	1
Styrene	ND		1.0		ug/L			01/17/13 20:09	1
Tert-amyl methyl ether	ND		5.0		ug/L			01/17/13 20:09	1
Tert-butyl ethyl ether	ND		5.0		ug/L			01/17/13 20:09	1
tert-Butylbenzene	ND		1.0		ug/L			01/17/13 20:09	1
Tetrachloroethene	ND		1.0		ug/L			01/17/13 20:09	1
Tetrahydrofuran	ND		10		ug/L			01/17/13 20:09	1
Toluene	ND		1.0		ug/L			01/17/13 20:09	1
trans-1,2-Dichloroethene	ND		1.0		ug/L			01/17/13 20:09	1
trans-1,3-Dichloropropene	ND		0.40		ug/L			01/17/13 20:09	1
Trichloroethene	**21**		1.0		ug/L			01/17/13 20:09	1
Trichlorofluoromethane	ND		1.0		ug/L			01/17/13 20:09	1
Vinyl chloride	ND		0.50		ug/L			01/17/13 20:09	1
Dibromomethane	ND		1.0		ug/L			01/17/13 20:09	1

Surrogate	*%Recovery*	*Qualifier*	*Limits*	*Prepared*	*Analyzed*	*Dil Fac*
Toluene-d8 (Surr)	*112*		*70 - 130*		*01/17/13 20:09*	*1*
1,2-Dichloroethane-d4 (Surr)	*105*		*70 - 130*		*01/17/13 20:09*	*1*
4-Bromofluorobenzene (Surr)	*115*		*70 - 130*		*01/17/13 20:09*	*1*

Client Sample ID: CS-02-20130116-01

Lab Sample ID: 480-31687-2

Date Collected: 01/16/13 16:40

Matrix: Water

Date Received: 01/17/13 02:10

Method: 8260C - Volatile Organic Compounds (GC/MS)

Analyte	Result	Qualifier	RL	MDL	Unit	D	Prepared	Analyzed	Dil Fac
1,1,1,2-Tetrachloroethane	ND		1.0		ug/L			01/17/13 20:33	1
1,1,1-Trichloroethane	ND		1.0		ug/L			01/17/13 20:33	1
1,1,2,2-Tetrachloroethane	ND		0.50		ug/L			01/17/13 20:33	1
1,1,2-Trichloroethane	ND		1.0		ug/L			01/17/13 20:33	1
1,1-Dichloroethane	ND		1.0		ug/L			01/17/13 20:33	1
1,1-Dichloroethene	ND		1.0		ug/L			01/17/13 20:33	1
1,1-Dichloropropene	ND		1.0		ug/L			01/17/13 20:33	1
1,2,3-Trichlorobenzene	ND		1.0		ug/L			01/17/13 20:33	1
1,2,3-Trichloropropane	ND		1.0		ug/L			01/17/13 20:33	1
1,2,4-Trichlorobenzene	ND		1.0		ug/L			01/17/13 20:33	1
1,2,4-Trimethylbenzene	ND		1.0		ug/L			01/17/13 20:33	1
1,2-Dibromo-3-Chloropropane	ND		5.0		ug/L			01/17/13 20:33	1
1,2-Dichlorobenzene	ND		1.0		ug/L			01/17/13 20:33	1
1,2-Dichloroethane	ND		1.0		ug/L			01/17/13 20:33	1
1,2-Dichloropropane	ND		1.0		ug/L			01/17/13 20:33	1
1,3,5-Trimethylbenzene	ND		1.0		ug/L			01/17/13 20:33	1

Client: ERM-Northeast
Project/Site: IDS Wayland

TestAmerica Job ID: 480-31687-1

Client Sample ID: CS-02-20130116-01
Date Collected: 01/16/13 16:40
Date Received: 01/17/13 02:10

Lab Sample ID: 480-31687-2
Matrix: Water

Method: 8260C - Volatile Organic Compounds (GC/MS) (Continued)

Analyte	Result	Qualifier	RL	MDL	Unit	D	Prepared	Analyzed	Dil Fac
1,3-Dichlorobenzene	ND		1.0		ug/L			01/17/13 20:33	1
1,3-Dichloropropane	ND		1.0		ug/L			01/17/13 20:33	1
1,4-Dichlorobenzene	ND		1.0		ug/L			01/17/13 20:33	1
1,4-Dioxane	ND	*	50		ug/L			01/17/13 20:33	1
2,2-Dichloropropane	ND		1.0		ug/L			01/17/13 20:33	1
2-Butanone (MEK)	ND		10		ug/L			01/17/13 20:33	1
2-Chlorotoluene	ND		1.0		ug/L			01/17/13 20:33	1
2-Hexanone	ND		10		ug/L			01/17/13 20:33	1
4-Chlorotoluene	ND		1.0		ug/L			01/17/13 20:33	1
4-Isopropyltoluene	ND		1.0		ug/L			01/17/13 20:33	1
4-Methyl-2-pentanone (MIBK)	ND		10		ug/L			01/17/13 20:33	1
Acetone	ND		50		ug/L			01/17/13 20:33	1
Benzene	ND		1.0		ug/L			01/17/13 20:33	1
Bromobenzene	ND		1.0		ug/L			01/17/13 20:33	1
Bromoform	ND		1.0		ug/L			01/17/13 20:33	1
Bromomethane	ND		2.0		ug/L			01/17/13 20:33	1
Carbon disulfide	ND		10		ug/L			01/17/13 20:33	1
Carbon tetrachloride	ND		1.0		ug/L			01/17/13 20:33	1
Chlorobenzene	ND		1.0		ug/L			01/17/13 20:33	1
Chlorobromomethane	ND		1.0		ug/L			01/17/13 20:33	1
Chlorodibromomethane	ND		0.50		ug/L			01/17/13 20:33	1
Chloroethane	ND		2.0		ug/L			01/17/13 20:33	1
Chloroform	ND		1.0		ug/L			01/17/13 20:33	1
Chloromethane	ND		2.0		ug/L			01/17/13 20:33	1
cis-1,2-Dichloroethene	**1.9**		1.0		ug/L			01/17/13 20:33	1
cis-1,3-Dichloropropene	ND		0.40		ug/L			01/17/13 20:33	1
Dichlorobromomethane	ND		0.50		ug/L			01/17/13 20:33	1
Dichlorodifluoromethane	ND		1.0		ug/L			01/17/13 20:33	1
Ethyl ether	ND		1.0		ug/L			01/17/13 20:33	1
Ethylbenzene	ND		1.0		ug/L			01/17/13 20:33	1
Ethylene Dibromide	ND		1.0		ug/L			01/17/13 20:33	1
Hexachlorobutadiene	ND		0.40		ug/L			01/17/13 20:33	1
Isopropyl ether	ND		10		ug/L			01/17/13 20:33	1
Isopropylbenzene	ND		1.0		ug/L			01/17/13 20:33	1
Methyl tert-butyl ether	**5.9**		1.0		ug/L			01/17/13 20:33	1
Methylene Chloride	ND		1.0		ug/L			01/17/13 20:33	1
m-Xylene & p-Xylene	ND		2.0		ug/L			01/17/13 20:33	1
Naphthalene	ND		5.0		ug/L			01/17/13 20:33	1
n-Butylbenzene	ND		1.0		ug/L			01/17/13 20:33	1
N-Propylbenzene	ND		1.0		ug/L			01/17/13 20:33	1
o-Xylene	ND		1.0		ug/L			01/17/13 20:33	1
sec-Butylbenzene	ND		1.0		ug/L			01/17/13 20:33	1
Styrene	ND		1.0		ug/L			01/17/13 20:33	1
Tert-amyl methyl ether	ND		5.0		ug/L			01/17/13 20:33	1
Tert-butyl ethyl ether	ND		5.0		ug/L			01/17/13 20:33	1
tert-Butylbenzene	ND		1.0		ug/L			01/17/13 20:33	1
Tetrachloroethene	ND		1.0		ug/L			01/17/13 20:33	1
Tetrahydrofuran	ND		10		ug/L			01/17/13 20:33	1
Toluene	ND		1.0		ug/L			01/17/13 20:33	1

Client Sample ID: CS-02-20130116-01

Lab Sample ID: 480-31687-2

Date Collected: 01/16/13 16:40

Matrix: Water

Date Received: 01/17/13 02:10

Method: 8260C - Volatile Organic Compounds (GC/MS) (Continued)

Analyte	Result	Qualifier	RL	MDL	Unit	D	Prepared	Analyzed	Dil Fac
trans-1,2-Dichloroethene	ND		1.0		ug/L			01/17/13 20:33	1
trans-1,3-Dichloropropene	ND		0.40		ug/L			01/17/13 20:33	1
Trichloroethene	**12**		1.0		ug/L			01/17/13 20:33	1
Trichlorofluoromethane	ND		1.0		ug/L			01/17/13 20:33	1
Vinyl chloride	ND		0.50		ug/L			01/17/13 20:33	1
Dibromomethane	ND		1.0		ug/L			01/17/13 20:33	1

Surrogate	*%Recovery*	*Qualifier*	*Limits*	*Prepared*	*Analyzed*	*Dil Fac*
Toluene-d8 (Surr)	*111*		*70 - 130*		*01/17/13 20:33*	*1*
1,2-Dichloroethane-d4 (Surr)	*103*		*70 - 130*		*01/17/13 20:33*	*1*
4-Bromofluorobenzene (Surr)	*110*		*70 - 130*		*01/17/13 20:33*	*1*

Client Sample ID: CS-03-20130116-01

Lab Sample ID: 480-31687-3

Date Collected: 01/16/13 16:50

Matrix: Water

Date Received: 01/17/13 02:10

Method: 8260C - Volatile Organic Compounds (GC/MS)

Analyte	Result	Qualifier	RL	MDL	Unit	D	Prepared	Analyzed	Dil Fac
1,1,1,2-Tetrachloroethane	ND		1.0		ug/L			01/17/13 20:57	1
1,1,1-Trichloroethane	ND		1.0		ug/L			01/17/13 20:57	1
1,1,2,2-Tetrachloroethane	ND		0.50		ug/L			01/17/13 20:57	1
1,1,2-Trichloroethane	ND		1.0		ug/L			01/17/13 20:57	1
1,1-Dichloroethane	ND		1.0		ug/L			01/17/13 20:57	1
1,1-Dichloroethene	ND		1.0		ug/L			01/17/13 20:57	1
1,1-Dichloropropene	ND		1.0		ug/L			01/17/13 20:57	1
1,2,3-Trichlorobenzene	ND		1.0		ug/L			01/17/13 20:57	1
1,2,3-Trichloropropane	ND		1.0		ug/L			01/17/13 20:57	1
1,2,4-Trichlorobenzene	ND		1.0		ug/L			01/17/13 20:57	1
1,2,4-Trimethylbenzene	ND		1.0		ug/L			01/17/13 20:57	1
1,2-Dibromo-3-Chloropropane	ND		5.0		ug/L			01/17/13 20:57	1
1,2-Dichlorobenzene	ND		1.0		ug/L			01/17/13 20:57	1
1,2-Dichloroethane	ND		1.0		ug/L			01/17/13 20:57	1
1,2-Dichloropropane	ND		1.0		ug/L			01/17/13 20:57	1
1,3,5-Trimethylbenzene	ND		1.0		ug/L			01/17/13 20:57	1
1,3-Dichlorobenzene	ND		1.0		ug/L			01/17/13 20:57	1
1,3-Dichloropropane	ND		1.0		ug/L			01/17/13 20:57	1
1,4-Dichlorobenzene	ND		1.0		ug/L			01/17/13 20:57	1
1,4-Dioxane	ND	*	50		ug/L			01/17/13 20:57	1
2,2-Dichloropropane	ND		1.0		ug/L			01/17/13 20:57	1
2-Butanone (MEK)	ND		10		ug/L			01/17/13 20:57	1
2-Chlorotoluene	ND		1.0		ug/L			01/17/13 20:57	1
2-Hexanone	ND		10		ug/L			01/17/13 20:57	1
4-Chlorotoluene	ND		1.0		ug/L			01/17/13 20:57	1
4-Isopropyltoluene	ND		1.0		ug/L			01/17/13 20:57	1
4-Methyl-2-pentanone (MIBK)	ND		10		ug/L			01/17/13 20:57	1
Acetone	ND		50		ug/L			01/17/13 20:57	1
Benzene	ND		1.0		ug/L			01/17/13 20:57	1
Bromobenzene	ND		1.0		ug/L			01/17/13 20:57	1
Bromoform	ND		1.0		ug/L			01/17/13 20:57	1
Bromomethane	ND		2.0		ug/L			01/17/13 20:57	1

Client: ERM-Northeast
Project/Site: IDS Wayland

TestAmerica Job ID: 480-31687-1

Client Sample ID: CS-03-20130116-01
Date Collected: 01/16/13 16:50
Date Received: 01/17/13 02:10

Lab Sample ID: 480-31687-3
Matrix: Water

Method: 8260C - Volatile Organic Compounds (GC/MS) (Continued)

Analyte	Result	Qualifier	RL	MDL	Unit	D	Prepared	Analyzed	Dil Fac
Carbon disulfide	ND		10		ug/L			01/17/13 20:57	1
Carbon tetrachloride	ND		1.0		ug/L			01/17/13 20:57	1
Chlorobenzene	ND		1.0		ug/L			01/17/13 20:57	1
Chlorobromomethane	ND		1.0		ug/L			01/17/13 20:57	1
Chlorodibromomethane	ND		0.50		ug/L			01/17/13 20:57	1
Chloroethane	ND		2.0		ug/L			01/17/13 20:57	1
Chloroform	ND		1.0		ug/L			01/17/13 20:57	1
Chloromethane	ND		2.0		ug/L			01/17/13 20:57	1
cis-1,2-Dichloroethene	**2.3**		1.0		ug/L			01/17/13 20:57	1
cis-1,3-Dichloropropene	ND		0.40		ug/L			01/17/13 20:57	1
Dichlorobromomethane	ND		0.50		ug/L			01/17/13 20:57	1
Dichlorodifluoromethane	ND		1.0		ug/L			01/17/13 20:57	1
Ethyl ether	ND		1.0		ug/L			01/17/13 20:57	1
Ethylbenzene	ND		1.0		ug/L			01/17/13 20:57	1
Ethylene Dibromide	ND		1.0		ug/L			01/17/13 20:57	1
Hexachlorobutadiene	ND		0.40		ug/L			01/17/13 20:57	1
Isopropyl ether	ND		10		ug/L			01/17/13 20:57	1
Isopropylbenzene	ND		1.0		ug/L			01/17/13 20:57	1
Methyl tert-butyl ether	**2.1**		1.0		ug/L			01/17/13 20:57	1
Methylene Chloride	ND		1.0		ug/L			01/17/13 20:57	1
m-Xylene & p-Xylene	ND		2.0		ug/L			01/17/13 20:57	1
Naphthalene	ND		5.0		ug/L			01/17/13 20:57	1
n-Butylbenzene	ND		1.0		ug/L			01/17/13 20:57	1
N-Propylbenzene	ND		1.0		ug/L			01/17/13 20:57	1
o-Xylene	ND		1.0		ug/L			01/17/13 20:57	1
sec-Butylbenzene	ND		1.0		ug/L			01/17/13 20:57	1
Styrene	ND		1.0		ug/L			01/17/13 20:57	1
Tert-amyl methyl ether	ND		5.0		ug/L			01/17/13 20:57	1
Tert-butyl ethyl ether	ND		5.0		ug/L			01/17/13 20:57	1
tert-Butylbenzene	ND		1.0		ug/L			01/17/13 20:57	1
Tetrachloroethene	ND		1.0		ug/L			01/17/13 20:57	1
Tetrahydrofuran	ND		10		ug/L			01/17/13 20:57	1
Toluene	ND		1.0		ug/L			01/17/13 20:57	1
trans-1,2-Dichloroethene	ND		1.0		ug/L			01/17/13 20:57	1
trans-1,3-Dichloropropene	ND		0.40		ug/L			01/17/13 20:57	1
Trichloroethene	**12**		1.0		ug/L			01/17/13 20:57	1
Trichlorofluoromethane	ND		1.0		ug/L			01/17/13 20:57	1
Vinyl chloride	ND		0.50		ug/L			01/17/13 20:57	1
Dibromomethane	ND		1.0		ug/L			01/17/13 20:57	1

Surrogate	*%Recovery*	*Qualifier*	*Limits*	*Prepared*	*Analyzed*	*Dil Fac*
Toluene-d8 (Surr)	*113*		*70 - 130*		*01/17/13 20:57*	*1*
1,2-Dichloroethane-d4 (Surr)	*102*		*70 - 130*		*01/17/13 20:57*	*1*
4-Bromofluorobenzene (Surr)	*114*		*70 - 130*		*01/17/13 20:57*	*1*

Client Sample Results

Client: ERM-Northeast
Project/Site: IDS Wayland

TestAmerica Job ID: 480-31687-1

Client Sample ID: Dup-001-20130116-01

Lab Sample ID: 480-31687-4

Date Collected: 01/16/13 00:00
Matrix: Water
Date Received: 01/17/13 02:10

Method: 8260C - Volatile Organic Compounds (GC/MS)

Analyte	Result	Qualifier	RL	MDL	Unit	D	Prepared	Analyzed	Dil Fac
1,1,1,2-Tetrachloroethane	ND		1.0		ug/L			01/17/13 21:20	1
1,1,1-Trichloroethane	ND		1.0		ug/L			01/17/13 21:20	1
1,1,2,2-Tetrachloroethane	ND		0.50		ug/L			01/17/13 21:20	1
1,1,2-Trichloroethane	ND		1.0		ug/L			01/17/13 21:20	1
1,1-Dichloroethane	ND		1.0		ug/L			01/17/13 21:20	1
1,1-Dichloroethene	ND		1.0		ug/L			01/17/13 21:20	1
1,1-Dichloropropene	ND		1.0		ug/L			01/17/13 21:20	1
1,2,3-Trichlorobenzene	ND		1.0		ug/L			01/17/13 21:20	1
1,2,3-Trichloropropane	ND		1.0		ug/L			01/17/13 21:20	1
1,2,4-Trichlorobenzene	ND		1.0		ug/L			01/17/13 21:20	1
1,2,4-Trimethylbenzene	ND		1.0		ug/L			01/17/13 21:20	1
1,2-Dibromo-3-Chloropropane	ND		5.0		ug/L			01/17/13 21:20	1
1,2-Dichlorobenzene	ND		1.0		ug/L			01/17/13 21:20	1
1,2-Dichloroethane	ND		1.0		ug/L			01/17/13 21:20	1
1,2-Dichloropropane	ND		1.0		ug/L			01/17/13 21:20	1
1,3,5-Trimethylbenzene	ND		1.0		ug/L			01/17/13 21:20	1
1,3-Dichlorobenzene	ND		1.0		ug/L			01/17/13 21:20	1
1,3-Dichloropropane	ND		1.0		ug/L			01/17/13 21:20	1
1,4-Dichlorobenzene	ND		1.0		ug/L			01/17/13 21:20	1
1,4-Dioxane	ND	*	50		ug/L			01/17/13 21:20	1
2,2-Dichloropropane	ND		1.0		ug/L			01/17/13 21:20	1
2-Butanone (MEK)	ND		10		ug/L			01/17/13 21:20	1
2-Chlorotoluene	ND		1.0		ug/L			01/17/13 21:20	1
2-Hexanone	ND		10		ug/L			01/17/13 21:20	1
4-Chlorotoluene	ND		1.0		ug/L			01/17/13 21:20	1
4-Isopropyltoluene	ND		1.0		ug/L			01/17/13 21:20	1
4-Methyl-2-pentanone (MIBK)	ND		10		ug/L			01/17/13 21:20	1
Acetone	ND		50		ug/L			01/17/13 21:20	1
Benzene	ND		1.0		ug/L			01/17/13 21:20	1
Bromobenzene	ND		1.0		ug/L			01/17/13 21:20	1
Bromoform	ND		1.0		ug/L			01/17/13 21:20	1
Bromomethane	ND		2.0		ug/L			01/17/13 21:20	1
Carbon disulfide	ND		10		ug/L			01/17/13 21:20	1
Carbon tetrachloride	ND		1.0		ug/L			01/17/13 21:20	1
Chlorobenzene	ND		1.0		ug/L			01/17/13 21:20	1
Chlorobromomethane	ND		1.0		ug/L			01/17/13 21:20	1
Chlorodibromomethane	ND		0.50		ug/L			01/17/13 21:20	1
Chloroethane	ND		2.0		ug/L			01/17/13 21:20	1
Chloroform	ND		1.0		ug/L			01/17/13 21:20	1
Chloromethane	ND		2.0		ug/L			01/17/13 21:20	1
cis-1,2-Dichloroethene	**3.0**		1.0		ug/L			01/17/13 21:20	1
cis-1,3-Dichloropropene	ND		0.40		ug/L			01/17/13 21:20	1
Dichlorobromomethane	ND		0.50		ug/L			01/17/13 21:20	1
Dichlorodifluoromethane	ND		1.0		ug/L			01/17/13 21:20	1
Ethyl ether	ND		1.0		ug/L			01/17/13 21:20	1
Ethylbenzene	ND		1.0		ug/L			01/17/13 21:20	1
Ethylene Dibromide	ND		1.0		ug/L			01/17/13 21:20	1
Hexachlorobutadiene	ND		0.40		ug/L			01/17/13 21:20	1
Isopropyl ether	ND		10		ug/L			01/17/13 21:20	1

Client Sample ID: Dup-001-20130116-01

Lab Sample ID: 480-31687-4

Date Collected: 01/16/13 00:00

Matrix: Water

Date Received: 01/17/13 02:10

Method: 8260C - Volatile Organic Compounds (GC/MS) (Continued)

Analyte	Result	Qualifier	RL	MDL	Unit	D	Prepared	Analyzed	Dil Fac
Isopropylbenzene	ND		1.0		ug/L			01/17/13 21:20	1
Methyl tert-butyl ether	**5.9**		1.0		ug/L			01/17/13 21:20	1
Methylene Chloride	ND		1.0		ug/L			01/17/13 21:20	1
m-Xylene & p-Xylene	ND		2.0		ug/L			01/17/13 21:20	1
Naphthalene	ND		5.0		ug/L			01/17/13 21:20	1
n-Butylbenzene	ND		1.0		ug/L			01/17/13 21:20	1
N-Propylbenzene	ND		1.0		ug/L			01/17/13 21:20	1
o-Xylene	ND		1.0		ug/L			01/17/13 21:20	1
sec-Butylbenzene	ND		1.0		ug/L			01/17/13 21:20	1
Styrene	ND		1.0		ug/L			01/17/13 21:20	1
Tert-amyl methyl ether	ND		5.0		ug/L			01/17/13 21:20	1
Tert-butyl ethyl ether	ND		5.0		ug/L			01/17/13 21:20	1
tert-Butylbenzene	ND		1.0		ug/L			01/17/13 21:20	1
Tetrachloroethene	ND		1.0		ug/L			01/17/13 21:20	1
Tetrahydrofuran	ND		10		ug/L			01/17/13 21:20	1
Toluene	ND		1.0		ug/L			01/17/13 21:20	1
trans-1,2-Dichloroethene	ND		1.0		ug/L			01/17/13 21:20	1
trans-1,3-Dichloropropene	ND		0.40		ug/L			01/17/13 21:20	1
Trichloroethene	**20**		1.0		ug/L			01/17/13 21:20	1
Trichlorofluoromethane	ND		1.0		ug/L			01/17/13 21:20	1
Vinyl chloride	ND		0.50		ug/L			01/17/13 21:20	1
Dibromomethane	ND		1.0		ug/L			01/17/13 21:20	1

Surrogate	*%Recovery*	*Qualifier*	*Limits*	*Prepared*	*Analyzed*	*Dil Fac*
Toluene-d8 (Surr)	*112*		*70 - 130*		*01/17/13 21:20*	*1*
1,2-Dichloroethane-d4 (Surr)	*103*		*70 - 130*		*01/17/13 21:20*	*1*
4-Bromofluorobenzene (Surr)	*117*		*70 - 130*		*01/17/13 21:20*	*1*

Client Sample ID: Trip Blank

Lab Sample ID: 480-31687-5

Date Collected: 01/16/13 00:00

Matrix: Water

Date Received: 01/17/13 02:10

Method: 8260C - Volatile Organic Compounds (GC/MS)

Analyte	Result	Qualifier	RL	MDL	Unit	D	Prepared	Analyzed	Dil Fac
1,1,1,2-Tetrachloroethane	ND		1.0		ug/L			01/18/13 13:53	1
1,1,1-Trichloroethane	ND		1.0		ug/L			01/18/13 13:53	1
1,1,2,2-Tetrachloroethane	ND		0.50		ug/L			01/18/13 13:53	1
1,1,2-Trichloroethane	ND		1.0		ug/L			01/18/13 13:53	1
1,1-Dichloroethane	ND		1.0		ug/L			01/18/13 13:53	1
1,1-Dichloroethene	ND		1.0		ug/L			01/18/13 13:53	1
1,1-Dichloropropene	ND		1.0		ug/L			01/18/13 13:53	1
1,2,3-Trichlorobenzene	ND		1.0		ug/L			01/18/13 13:53	1
1,2,3-Trichloropropane	ND		1.0		ug/L			01/18/13 13:53	1
1,2,4-Trichlorobenzene	ND		1.0		ug/L			01/18/13 13:53	1
1,2,4-Trimethylbenzene	ND		1.0		ug/L			01/18/13 13:53	1
1,2-Dibromo-3-Chloropropane	ND		5.0		ug/L			01/18/13 13:53	1
1,2-Dichlorobenzene	ND		1.0		ug/L			01/18/13 13:53	1
1,2-Dichloroethane	ND		1.0		ug/L			01/18/13 13:53	1
1,2-Dichloropropane	ND		1.0		ug/L			01/18/13 13:53	1
1,3,5-Trimethylbenzene	ND		1.0		ug/L			01/18/13 13:53	1

Client: ERM-Northeast
Project/Site: IDS Wayland

TestAmerica Job ID: 480-31687-1

Client Sample ID: Trip Blank
Date Collected: 01/16/13 00:00
Date Received: 01/17/13 02:10

Lab Sample ID: 480-31687-5
Matrix: Water

Method: 8260C - Volatile Organic Compounds (GC/MS) (Continued)

Analyte	Result	Qualifier	RL	MDL	Unit	D	Prepared	Analyzed	Dil Fac
1,3-Dichlorobenzene	ND		1.0		ug/L			01/18/13 13:53	1
1,3-Dichloropropane	ND		1.0		ug/L			01/18/13 13:53	1
1,4-Dichlorobenzene	ND		1.0		ug/L			01/18/13 13:53	1
1,4-Dioxane	ND	*	50		ug/L			01/18/13 13:53	1
2,2-Dichloropropane	ND		1.0		ug/L			01/18/13 13:53	1
2-Butanone (MEK)	ND		10		ug/L			01/18/13 13:53	1
2-Chlorotoluene	ND		1.0		ug/L			01/18/13 13:53	1
2-Hexanone	ND		10		ug/L			01/18/13 13:53	1
4-Chlorotoluene	ND		1.0		ug/L			01/18/13 13:53	1
4-Isopropyltoluene	ND		1.0		ug/L			01/18/13 13:53	1
4-Methyl-2-pentanone (MIBK)	ND		10		ug/L			01/18/13 13:53	1
Acetone	ND		50		ug/L			01/18/13 13:53	1
Benzene	ND		1.0		ug/L			01/18/13 13:53	1
Bromobenzene	ND		1.0		ug/L			01/18/13 13:53	1
Bromoform	ND		1.0		ug/L			01/18/13 13:53	1
Bromomethane	ND		2.0		ug/L			01/18/13 13:53	1
Carbon disulfide	ND		10		ug/L			01/18/13 13:53	1
Carbon tetrachloride	ND		1.0		ug/L			01/18/13 13:53	1
Chlorobenzene	ND		1.0		ug/L			01/18/13 13:53	1
Chlorobromomethane	ND		1.0		ug/L			01/18/13 13:53	1
Chlorodibromomethane	ND		0.50		ug/L			01/18/13 13:53	1
Chloroethane	ND		2.0		ug/L			01/18/13 13:53	1
Chloroform	ND		1.0		ug/L			01/18/13 13:53	1
Chloromethane	ND		2.0		ug/L			01/18/13 13:53	1
cis-1,2-Dichloroethene	ND		1.0		ug/L			01/18/13 13:53	1
cis-1,3-Dichloropropene	ND		0.40		ug/L			01/18/13 13:53	1
Dichlorobromomethane	ND		0.50		ug/L			01/18/13 13:53	1
Dichlorodifluoromethane	ND		1.0		ug/L			01/18/13 13:53	1
Ethyl ether	ND		1.0		ug/L			01/18/13 13:53	1
Ethylbenzene	ND		1.0		ug/L			01/18/13 13:53	1
Ethylene Dibromide	ND		1.0		ug/L			01/18/13 13:53	1
Hexachlorobutadiene	ND		0.40		ug/L			01/18/13 13:53	1
Isopropyl ether	ND		10		ug/L			01/18/13 13:53	1
Isopropylbenzene	ND		1.0		ug/L			01/18/13 13:53	1
Methyl tert-butyl ether	ND		1.0		ug/L			01/18/13 13:53	1
Methylene Chloride	ND		1.0		ug/L			01/18/13 13:53	1
m-Xylene & p-Xylene	ND		2.0		ug/L			01/18/13 13:53	1
Naphthalene	ND		5.0		ug/L			01/18/13 13:53	1
n-Butylbenzene	ND		1.0		ug/L			01/18/13 13:53	1
N-Propylbenzene	ND		1.0		ug/L			01/18/13 13:53	1
o-Xylene	ND		1.0		ug/L			01/18/13 13:53	1
sec-Butylbenzene	ND		1.0		ug/L			01/18/13 13:53	1
Styrene	ND		1.0		ug/L			01/18/13 13:53	1
Tert-amyl methyl ether	ND		5.0		ug/L			01/18/13 13:53	1
Tert-butyl ethyl ether	ND		5.0		ug/L			01/18/13 13:53	1
tert-Butylbenzene	ND		1.0		ug/L			01/18/13 13:53	1
Tetrachloroethene	ND		1.0		ug/L			01/18/13 13:53	1
Tetrahydrofuran	ND		10		ug/L			01/18/13 13:53	1
Toluene	ND		1.0		ug/L			01/18/13 13:53	1

Client Sample Results

Client: ERM-Northeast
Project/Site: IDS Wayland

TestAmerica Job ID: 480-31687-1

Client Sample ID: Trip Blank

Lab Sample ID: 480-31687-5

Date Collected: 01/16/13 00:00
Matrix: Water
Date Received: 01/17/13 02:10

Method: 8260C - Volatile Organic Compounds (GC/MS) (Continued)

Analyte	Result	Qualifier	RL	MDL	Unit	D	Prepared	Analyzed	Dil Fac
trans-1,2-Dichloroethene	ND		1.0		ug/L			01/18/13 13:53	1
trans-1,3-Dichloropropene	ND		0.40		ug/L			01/18/13 13:53	1
Trichloroethene	ND		1.0		ug/L			01/18/13 13:53	1
Trichlorofluoromethane	ND		1.0		ug/L			01/18/13 13:53	1
Vinyl chloride	ND		0.50		ug/L			01/18/13 13:53	1
Dibromomethane	ND		1.0		ug/L			01/18/13 13:53	1

Surrogate	*%Recovery*	*Qualifier*	*Limits*	*Prepared*	*Analyzed*	*Dil Fac*
Toluene-d8 (Surr)	*116*		*70 - 130*		*01/18/13 13:53*	*1*
1,2-Dichloroethane-d4 (Surr)	*102*		*70 - 130*		*01/18/13 13:53*	*1*
4-Bromofluorobenzene (Surr)	*115*		*70 - 130*		*01/18/13 13:53*	*1*

Surrogate Summary

Client: ERM-Northeast
Project/Site: IDS Wayland

TestAmerica Job ID: 480-31687-1

Method: 8260C - Volatile Organic Compounds (GC/MS)

Matrix: Water **Prep Type: Total/NA**

		Percent Surrogate Recovery (Acceptance Limits)		
		TOL	12DCE	BFB
Lab Sample ID	Client Sample ID	(70-130)	(70-130)	(70-130)
480-31687-1	CS-01-20130116-01	112	105	115
480-31687-2	CS-02-20130116-01	111	103	110
480-31687-3	CS-03-20130116-01	113	102	114
480-31687-4	Dup-001-20130116-01	112	103	117
480-31687-5	Trip Blank	116	102	115
LCS 480-100158/4	Lab Control Sample	114	100	117
LCS 480-99978/4	Lab Control Sample	121	106	119
LCSD 480-100158/5	Lab Control Sample Dup	115	98	112
LCSD 480-99978/5	Lab Control Sample Dup	121	102	121
MB 480-100158/7	Method Blank	115	99	114
MB 480-99978/7	Method Blank	120	106	119

Surrogate Legend

TOL = Toluene-d8 (Surr)

12DCE = 1,2-Dichloroethane-d4 (Surr)

BFB = 4-Bromofluorobenzene (Surr)

Method: 8260C - Volatile Organic Compounds (GC/MS)

Lab Sample ID: MB 480-100158/7
Matrix: Water
Analysis Batch: 100158

Client Sample ID: Method Blank
Prep Type: Total/NA

Analyte	MB Result	MB Qualifier	RL	MDL	Unit	D	Prepared	Analyzed	Dil Fac
1,1,1,2-Tetrachloroethane	ND		1.0		ug/L			01/18/13 13:17	1
1,1,1-Trichloroethane	ND		1.0		ug/L			01/18/13 13:17	1
1,1,2,2-Tetrachloroethane	ND		0.50		ug/L			01/18/13 13:17	1
1,1,2-Trichloroethane	ND		1.0		ug/L			01/18/13 13:17	1
1,1-Dichloroethane	ND		1.0		ug/L			01/18/13 13:17	1
1,1-Dichloroethene	ND		1.0		ug/L			01/18/13 13:17	1
1,1-Dichloropropene	ND		1.0		ug/L			01/18/13 13:17	1
1,2,3-Trichlorobenzene	ND		1.0		ug/L			01/18/13 13:17	1
1,2,3-Trichloropropane	ND		1.0		ug/L			01/18/13 13:17	1
1,2,4-Trichlorobenzene	ND		1.0		ug/L			01/18/13 13:17	1
1,2,4-Trimethylbenzene	ND		1.0		ug/L			01/18/13 13:17	1
1,2-Dibromo-3-Chloropropane	ND		5.0		ug/L			01/18/13 13:17	1
1,2-Dichlorobenzene	ND		1.0		ug/L			01/18/13 13:17	1
1,2-Dichloroethane	ND		1.0		ug/L			01/18/13 13:17	1
1,2-Dichloropropane	ND		1.0		ug/L			01/18/13 13:17	1
1,3,5-Trimethylbenzene	ND		1.0		ug/L			01/18/13 13:17	1
1,3-Dichlorobenzene	ND		1.0		ug/L			01/18/13 13:17	1
1,3-Dichloropropane	ND		1.0		ug/L			01/18/13 13:17	1
1,4-Dichlorobenzene	ND		1.0		ug/L			01/18/13 13:17	1
1,4-Dioxane	ND		50		ug/L			01/18/13 13:17	1
2,2-Dichloropropane	ND		1.0		ug/L			01/18/13 13:17	1
2-Butanone (MEK)	ND		10		ug/L			01/18/13 13:17	1
2-Chlorotoluene	ND		1.0		ug/L			01/18/13 13:17	1
2-Hexanone	ND		10		ug/L			01/18/13 13:17	1
4-Chlorotoluene	ND		1.0		ug/L			01/18/13 13:17	1
4-Isopropyltoluene	ND		1.0		ug/L			01/18/13 13:17	1
4-Methyl-2-pentanone (MIBK)	ND		10		ug/L			01/18/13 13:17	1
Acetone	ND		50		ug/L			01/18/13 13:17	1
Benzene	ND		1.0		ug/L			01/18/13 13:17	1
Bromobenzene	ND		1.0		ug/L			01/18/13 13:17	1
Bromoform	ND		1.0		ug/L			01/18/13 13:17	1
Bromomethane	ND		2.0		ug/L			01/18/13 13:17	1
Carbon disulfide	ND		10		ug/L			01/18/13 13:17	1
Carbon tetrachloride	ND		1.0		ug/L			01/18/13 13:17	1
Chlorobenzene	ND		1.0		ug/L			01/18/13 13:17	1
Chlorobromomethane	ND		1.0		ug/L			01/18/13 13:17	1
Chlorodibromomethane	ND		0.50		ug/L			01/18/13 13:17	1
Chloroethane	ND		2.0		ug/L			01/18/13 13:17	1
Chloroform	ND		1.0		ug/L			01/18/13 13:17	1
Chloromethane	ND		2.0		ug/L			01/18/13 13:17	1
cis-1,2-Dichloroethene	ND		1.0		ug/L			01/18/13 13:17	1
cis-1,3-Dichloropropene	ND		0.40		ug/L			01/18/13 13:17	1
Dichlorobromomethane	ND		0.50		ug/L			01/18/13 13:17	1
Dichlorodifluoromethane	ND		1.0		ug/L			01/18/13 13:17	1
Ethyl ether	ND		1.0		ug/L			01/18/13 13:17	1
Ethylbenzene	ND		1.0		ug/L			01/18/13 13:17	1
Ethylene Dibromide	ND		1.0		ug/L			01/18/13 13:17	1
Hexachlorobutadiene	ND		0.40		ug/L			01/18/13 13:17	1

Method: 8260C - Volatile Organic Compounds (GC/MS) (Continued)

Lab Sample ID: MB 480-100158/7
Matrix: Water
Analysis Batch: 100158

Client Sample ID: Method Blank
Prep Type: Total/NA

Analyte	MB Result	MB Qualifier	RL	MDL	Unit	D	Prepared	Analyzed	Dil Fac
Isopropyl ether	ND		10		ug/L			01/18/13 13:17	1
Isopropylbenzene	ND		1.0		ug/L			01/18/13 13:17	1
Methyl tert-butyl ether	ND		1.0		ug/L			01/18/13 13:17	1
Methylene Chloride	ND		1.0		ug/L			01/18/13 13:17	1
m-Xylene & p-Xylene	ND		2.0		ug/L			01/18/13 13:17	1
Naphthalene	ND		5.0		ug/L			01/18/13 13:17	1
n-Butylbenzene	ND		1.0		ug/L			01/18/13 13:17	1
N-Propylbenzene	ND		1.0		ug/L			01/18/13 13:17	1
o-Xylene	ND		1.0		ug/L			01/18/13 13:17	1
sec-Butylbenzene	ND		1.0		ug/L			01/18/13 13:17	1
Styrene	ND		1.0		ug/L			01/18/13 13:17	1
Tert-amyl methyl ether	ND		5.0		ug/L			01/18/13 13:17	1
Tert-butyl ethyl ether	ND		5.0		ug/L			01/18/13 13:17	1
tert-Butylbenzene	ND		1.0		ug/L			01/18/13 13:17	1
Tetrachloroethene	ND		1.0		ug/L			01/18/13 13:17	1
Tetrahydrofuran	ND		10		ug/L			01/18/13 13:17	1
Toluene	ND		1.0		ug/L			01/18/13 13:17	1
trans-1,2-Dichloroethene	ND		1.0		ug/L			01/18/13 13:17	1
trans-1,3-Dichloropropene	ND		0.40		ug/L			01/18/13 13:17	1
Trichloroethene	ND		1.0		ug/L			01/18/13 13:17	1
Trichlorofluoromethane	ND		1.0		ug/L			01/18/13 13:17	1
Vinyl chloride	ND		0.50		ug/L			01/18/13 13:17	1
Dibromomethane	ND		1.0		ug/L			01/18/13 13:17	1

Surrogate	*MB %Recovery*	*MB Qualifier*	*Limits*	*Prepared*	*Analyzed*	*Dil Fac*
Toluene-d8 (Surr)	*115*		*70 - 130*		*01/18/13 13:17*	*1*
1,2-Dichloroethane-d4 (Surr)	*99*		*70 - 130*		*01/18/13 13:17*	*1*
4-Bromofluorobenzene (Surr)	*114*		*70 - 130*		*01/18/13 13:17*	*1*

Lab Sample ID: LCS 480-100158/4
Matrix: Water
Analysis Batch: 100158

Client Sample ID: Lab Control Sample
Prep Type: Total/NA

Analyte	Spike Added	LCS Result	LCS Qualifier	Unit	D	%Rec	%Rec. Limits
1,1,1,2-Tetrachloroethane	25.0	25.0		ug/L		100	70 - 130
1,1,1-Trichloroethane	25.0	24.5		ug/L		98	70 - 130
1,1,2,2-Tetrachloroethane	25.0	23.6		ug/L		94	70 - 130
1,1,2-Trichloroethane	25.0	23.8		ug/L		95	70 - 130
1,1-Dichloroethane	25.0	24.2		ug/L		97	70 - 130
1,1-Dichloroethene	25.0	25.1		ug/L		100	70 - 130
1,1-Dichloropropene	25.0	25.0		ug/L		100	70 - 130
1,2,3-Trichlorobenzene	25.0	22.4		ug/L		90	70 - 130
1,2,3-Trichloropropane	25.0	23.1		ug/L		92	70 - 130
1,2,4-Trichlorobenzene	25.0	25.0		ug/L		100	70 - 130
1,2,4-Trimethylbenzene	25.0	24.1		ug/L		96	70 - 130
1,2-Dibromo-3-Chloropropane	25.0	23.2		ug/L		93	70 - 130
1,2-Dichlorobenzene	25.0	25.5		ug/L		102	70 - 130
1,2-Dichloroethane	25.0	22.9		ug/L		92	70 - 130

Method: 8260C - Volatile Organic Compounds (GC/MS) (Continued)

Lab Sample ID: LCS 480-100158/4
Matrix: Water
Analysis Batch: 100158

Client Sample ID: Lab Control Sample
Prep Type: Total/NA

Analyte	Spike Added	LCS Result	LCS Qualifier	Unit	D	%Rec	%Rec. Limits
1,2-Dichloropropane	25.0	23.5		ug/L		94	70 - 130
1,3,5-Trimethylbenzene	25.0	24.8		ug/L		99	70 - 130
1,3-Dichlorobenzene	25.0	25.9		ug/L		103	70 - 130
1,3-Dichloropropane	25.0	24.1		ug/L		96	70 - 130
1,4-Dichlorobenzene	25.0	24.5		ug/L		98	70 - 130
1,4-Dioxane	1000	1170		ug/L		117	70 - 130
2,2-Dichloropropane	25.0	24.8		ug/L		99	70 - 130
2-Butanone (MEK)	125	152		ug/L		121	70 - 130
2-Chlorotoluene	25.0	25.1		ug/L		100	70 - 130
2-Hexanone	125	108		ug/L		86	70 - 130
4-Chlorotoluene	25.0	22.3		ug/L		89	70 - 130
4-Isopropyltoluene	25.0	25.6		ug/L		102	70 - 130
4-Methyl-2-pentanone (MIBK)	125	108		ug/L		86	70 - 130
Acetone	125	121		ug/L		97	70 - 130
Benzene	25.0	25.0		ug/L		100	70 - 130
Bromobenzene	25.0	25.4		ug/L		102	70 - 130
Bromoform	25.0	24.2		ug/L		97	70 - 130
Bromomethane	25.0	21.2		ug/L		85	70 - 130
Carbon disulfide	25.0	26.7		ug/L		107	70 - 130
Carbon tetrachloride	25.0	24.6		ug/L		99	70 - 130
Chlorobenzene	25.0	25.2		ug/L		101	70 - 130
Chlorobromomethane	25.0	25.3		ug/L		101	70 - 130
Chlorodibromomethane	25.0	24.9		ug/L		99	70 - 130
Chloroethane	25.0	23.2		ug/L		93	70 - 130
Chloroform	25.0	23.9		ug/L		96	70 - 130
Chloromethane	25.0	23.7		ug/L		95	70 - 130
cis-1,2-Dichloroethene	25.0	25.3		ug/L		101	70 - 130
cis-1,3-Dichloropropene	25.0	24.9		ug/L		100	70 - 130
Dichlorobromomethane	25.0	24.5		ug/L		98	70 - 130
Dichlorodifluoromethane	50.0	50.8		ug/L		102	70 - 130
Ethyl ether	25.0	23.1		ug/L		93	70 - 130
Ethylbenzene	25.0	25.3		ug/L		101	70 - 130
Ethylene Dibromide	25.0	24.7		ug/L		99	70 - 130
Hexachlorobutadiene	25.0	24.5		ug/L		98	70 - 130
Isopropyl ether	25.0	23.1		ug/L		93	70 - 130
Isopropylbenzene	25.0	24.8		ug/L		99	70 - 130
Methyl tert-butyl ether	25.0	23.9		ug/L		96	70 - 130
Methylene Chloride	25.0	24.2		ug/L		97	70 - 130
m-Xylene & p-Xylene	50.0	50.6		ug/L		101	70 - 130
Naphthalene	25.0	23.6		ug/L		95	70 - 130
n-Butylbenzene	25.0	25.0		ug/L		100	70 - 130
N-Propylbenzene	25.0	24.5		ug/L		98	70 - 130
o-Xylene	25.0	25.1		ug/L		100	70 - 130
sec-Butylbenzene	25.0	25.5		ug/L		102	70 - 130
Styrene	25.0	25.6		ug/L		102	70 - 130
Tert-amyl methyl ether	25.0	23.8		ug/L		95	70 - 130
Tert-butyl ethyl ether	25.0	23.4		ug/L		94	70 - 130
tert-Butylbenzene	25.0	25.6		ug/L		102	70 - 130

Method: 8260C - Volatile Organic Compounds (GC/MS) (Continued)

Lab Sample ID: LCS 480-100158/4
Matrix: Water
Analysis Batch: 100158

Client Sample ID: Lab Control Sample
Prep Type: Total/NA

Analyte	Spike Added	LCS Result	LCS Qualifier	Unit	D	%Rec	%Rec. Limits
Tetrachloroethene	25.0	27.9		ug/L		112	70 - 130
Tetrahydrofuran	125	113		ug/L		91	70 - 130
Toluene	25.0	25.1		ug/L		101	70 - 130
trans-1,2-Dichloroethene	25.0	25.5		ug/L		102	70 - 130
trans-1,3-Dichloropropene	25.0	23.6		ug/L		94	70 - 130
Trichloroethene	25.0	25.5		ug/L		102	70 - 130
Trichlorofluoromethane	25.0	23.5		ug/L		94	70 - 130
Vinyl chloride	25.0	24.9		ug/L		99	70 - 130
Dibromomethane	25.0	24.1		ug/L		96	70 - 130

Surrogate	*LCS %Recovery*	*LCS Qualifier*	*Limits*
Toluene-d8 (Surr)	*114*		*70 - 130*
1,2-Dichloroethane-d4 (Surr)	*100*		*70 - 130*
4-Bromofluorobenzene (Surr)	*117*		*70 - 130*

Lab Sample ID: LCSD 480-100158/5
Matrix: Water
Analysis Batch: 100158

Client Sample ID: Lab Control Sample Dup
Prep Type: Total/NA

Analyte	Spike Added	LCSD Result	LCSD Qualifier	Unit	D	%Rec	%Rec. Limits	RPD	RPD Limit
1,1,1,2-Tetrachloroethane	25.0	25.5		ug/L		102	70 - 130	2	20
1,1,1-Trichloroethane	25.0	24.8		ug/L		99	70 - 130	1	20
1,1,2,2-Tetrachloroethane	25.0	22.9		ug/L		92	70 - 130	3	20
1,1,2-Trichloroethane	25.0	23.3		ug/L		93	70 - 130	2	20
1,1-Dichloroethane	25.0	24.5		ug/L		98	70 - 130	2	20
1,1-Dichloroethene	25.0	25.1		ug/L		100	70 - 130	0	20
1,1-Dichloropropene	25.0	26.0		ug/L		104	70 - 130	4	20
1,2,3-Trichlorobenzene	25.0	22.8		ug/L		91	70 - 130	2	20
1,2,3-Trichloropropane	25.0	23.4		ug/L		94	70 - 130	1	20
1,2,4-Trichlorobenzene	25.0	25.0		ug/L		100	70 - 130	0	20
1,2,4-Trimethylbenzene	25.0	24.6		ug/L		98	70 - 130	2	20
1,2-Dibromo-3-Chloropropane	25.0	22.7		ug/L		91	70 - 130	2	20
1,2-Dichlorobenzene	25.0	25.5		ug/L		102	70 - 130	0	20
1,2-Dichloroethane	25.0	22.5		ug/L		90	70 - 130	2	20
1,2-Dichloropropane	25.0	23.5		ug/L		94	70 - 130	0	20
1,3,5-Trimethylbenzene	25.0	24.3		ug/L		97	70 - 130	2	20
1,3-Dichlorobenzene	25.0	26.0		ug/L		104	70 - 130	0	20
1,3-Dichloropropane	25.0	23.4		ug/L		94	70 - 130	3	20
1,4-Dichlorobenzene	25.0	25.4		ug/L		101	70 - 130	4	20
1,4-Dioxane	1000	1330	*	ug/L		133	70 - 130	13	20
2,2-Dichloropropane	25.0	24.0		ug/L		96	70 - 130	3	20
2-Butanone (MEK)	125	143		ug/L		115	70 - 130	6	20
2-Chlorotoluene	25.0	25.1		ug/L		100	70 - 130	0	20
2-Hexanone	125	105		ug/L		84	70 - 130	3	20
4-Chlorotoluene	25.0	22.5		ug/L		90	70 - 130	1	20
4-Isopropyltoluene	25.0	25.9		ug/L		104	70 - 130	1	20
4-Methyl-2-pentanone (MIBK)	125	106		ug/L		84	70 - 130	2	20
Acetone	125	106		ug/L		85	70 - 130	14	20

Method: 8260C - Volatile Organic Compounds (GC/MS) (Continued)

Lab Sample ID: LCSD 480-100158/5
Matrix: Water
Analysis Batch: 100158

Client Sample ID: Lab Control Sample Dup
Prep Type: Total/NA

Analyte	Spike Added	LCSD Result	LCSD Qualifier	Unit	D	%Rec	%Rec. Limits	RPD	RPD Limit
Benzene	25.0	25.1		ug/L		100	70 - 130	0	20
Bromobenzene	25.0	25.4		ug/L		101	70 - 130	0	20
Bromoform	25.0	24.3		ug/L		97	70 - 130	0	20
Bromomethane	25.0	24.8		ug/L		99	70 - 130	15	20
Carbon disulfide	25.0	27.2		ug/L		109	70 - 130	2	20
Carbon tetrachloride	25.0	25.4		ug/L		102	70 - 130	3	20
Chlorobenzene	25.0	25.7		ug/L		103	70 - 130	2	20
Chlorobromomethane	25.0	25.7		ug/L		103	70 - 130	2	20
Chlorodibromomethane	25.0	24.9		ug/L		100	70 - 130	0	20
Chloroethane	25.0	22.9		ug/L		91	70 - 130	2	20
Chloroform	25.0	23.9		ug/L		96	70 - 130	0	20
Chloromethane	25.0	23.4		ug/L		94	70 - 130	1	20
cis-1,2-Dichloroethene	25.0	26.0		ug/L		104	70 - 130	3	20
cis-1,3-Dichloropropene	25.0	24.9		ug/L		100	70 - 130	0	20
Dichlorobromomethane	25.0	24.4		ug/L		97	70 - 130	1	20
Dichlorodifluoromethane	50.0	51.8		ug/L		104	70 - 130	2	20
Ethyl ether	25.0	22.4		ug/L		90	70 - 130	3	20
Ethylbenzene	25.0	25.6		ug/L		102	70 - 130	1	20
Ethylene Dibromide	25.0	25.0		ug/L		100	70 - 130	1	20
Hexachlorobutadiene	25.0	24.5		ug/L		98	70 - 130	0	20
Isopropyl ether	25.0	22.9		ug/L		92	70 - 130	1	20
Isopropylbenzene	25.0	25.3		ug/L		101	70 - 130	2	20
Methyl tert-butyl ether	25.0	23.3		ug/L		93	70 - 130	3	20
Methylene Chloride	25.0	24.4		ug/L		97	70 - 130	1	20
m-Xylene & p-Xylene	50.0	50.8		ug/L		102	70 - 130	0	20
Naphthalene	25.0	23.9		ug/L		96	70 - 130	1	20
n-Butylbenzene	25.0	25.0		ug/L		100	70 - 130	0	20
N-Propylbenzene	25.0	24.6		ug/L		98	70 - 130	0	20
o-Xylene	25.0	25.4		ug/L		102	70 - 130	1	20
sec-Butylbenzene	25.0	25.6		ug/L		102	70 - 130	0	20
Styrene	25.0	25.7		ug/L		103	70 - 130	0	20
Tert-amyl methyl ether	25.0	23.8		ug/L		95	70 - 130	0	20
Tert-butyl ethyl ether	25.0	22.8		ug/L		91	70 - 130	3	20
tert-Butylbenzene	25.0	25.6		ug/L		102	70 - 130	0	20
Tetrachloroethene	25.0	29.1		ug/L		116	70 - 130	4	20
Tetrahydrofuran	125	106		ug/L		85	70 - 130	7	20
Toluene	25.0	25.6		ug/L		102	70 - 130	2	20
trans-1,2-Dichloroethene	25.0	25.6		ug/L		102	70 - 130	1	20
trans-1,3-Dichloropropene	25.0	23.7		ug/L		95	70 - 130	1	20
Trichloroethene	25.0	25.1		ug/L		101	70 - 130	2	20
Trichlorofluoromethane	25.0	24.5		ug/L		98	70 - 130	4	20
Vinyl chloride	25.0	25.7		ug/L		103	70 - 130	3	20
Dibromomethane	25.0	24.3		ug/L		97	70 - 130	1	20

Surrogate	*LCSD %Recovery*	*LCSD Qualifier*	*Limits*
Toluene-d8 (Surr)	*115*		*70 - 130*
1,2-Dichloroethane-d4 (Surr)	*98*		*70 - 130*
4-Bromofluorobenzene (Surr)	*112*		*70 - 130*

Method: 8260C - Volatile Organic Compounds (GC/MS) (Continued)

Lab Sample ID: MB 480-99978/7
Matrix: Water
Analysis Batch: 99978

Client Sample ID: Method Blank
Prep Type: Total/NA

Analyte	MB Result	MB Qualifier	RL	MDL	Unit	D	Prepared	Analyzed	Dil Fac
1,1,1,2-Tetrachloroethane	ND		1.0		ug/L			01/17/13 13:16	1
1,1,1-Trichloroethane	ND		1.0		ug/L			01/17/13 13:16	1
1,1,2,2-Tetrachloroethane	ND		0.50		ug/L			01/17/13 13:16	1
1,1,2-Trichloroethane	ND		1.0		ug/L			01/17/13 13:16	1
1,1-Dichloroethane	ND		1.0		ug/L			01/17/13 13:16	1
1,1-Dichloroethene	ND		1.0		ug/L			01/17/13 13:16	1
1,1-Dichloropropene	ND		1.0		ug/L			01/17/13 13:16	1
1,2,3-Trichlorobenzene	ND		1.0		ug/L			01/17/13 13:16	1
1,2,3-Trichloropropane	ND		1.0		ug/L			01/17/13 13:16	1
1,2,4-Trichlorobenzene	ND		1.0		ug/L			01/17/13 13:16	1
1,2,4-Trimethylbenzene	ND		1.0		ug/L			01/17/13 13:16	1
1,2-Dibromo-3-Chloropropane	ND		5.0		ug/L			01/17/13 13:16	1
1,2-Dichlorobenzene	ND		1.0		ug/L			01/17/13 13:16	1
1,2-Dichloroethane	ND		1.0		ug/L			01/17/13 13:16	1
1,2-Dichloropropane	ND		1.0		ug/L			01/17/13 13:16	1
1,3,5-Trimethylbenzene	ND		1.0		ug/L			01/17/13 13:16	1
1,3-Dichlorobenzene	ND		1.0		ug/L			01/17/13 13:16	1
1,3-Dichloropropane	ND		1.0		ug/L			01/17/13 13:16	1
1,4-Dichlorobenzene	ND		1.0		ug/L			01/17/13 13:16	1
1,4-Dioxane	ND		50		ug/L			01/17/13 13:16	1
2,2-Dichloropropane	ND		1.0		ug/L			01/17/13 13:16	1
2-Butanone (MEK)	ND		10		ug/L			01/17/13 13:16	1
2-Chlorotoluene	ND		1.0		ug/L			01/17/13 13:16	1
2-Hexanone	ND		10		ug/L			01/17/13 13:16	1
4-Chlorotoluene	ND		1.0		ug/L			01/17/13 13:16	1
4-Isopropyltoluene	ND		1.0		ug/L			01/17/13 13:16	1
4-Methyl-2-pentanone (MIBK)	ND		10		ug/L			01/17/13 13:16	1
Acetone	ND		50		ug/L			01/17/13 13:16	1
Benzene	ND		1.0		ug/L			01/17/13 13:16	1
Bromobenzene	ND		1.0		ug/L			01/17/13 13:16	1
Bromoform	ND		1.0		ug/L			01/17/13 13:16	1
Bromomethane	ND		2.0		ug/L			01/17/13 13:16	1
Carbon disulfide	ND		10		ug/L			01/17/13 13:16	1
Carbon tetrachloride	ND		1.0		ug/L			01/17/13 13:16	1
Chlorobenzene	ND		1.0		ug/L			01/17/13 13:16	1
Chlorobromomethane	ND		1.0		ug/L			01/17/13 13:16	1
Chlorodibromomethane	ND		0.50		ug/L			01/17/13 13:16	1
Chloroethane	ND		2.0		ug/L			01/17/13 13:16	1
Chloroform	ND		1.0		ug/L			01/17/13 13:16	1
Chloromethane	ND		2.0		ug/L			01/17/13 13:16	1
cis-1,2-Dichloroethene	ND		1.0		ug/L			01/17/13 13:16	1
cis-1,3-Dichloropropene	ND		0.40		ug/L			01/17/13 13:16	1
Dichlorobromomethane	ND		0.50		ug/L			01/17/13 13:16	1
Dichlorodifluoromethane	ND		1.0		ug/L			01/17/13 13:16	1
Ethyl ether	ND		1.0		ug/L			01/17/13 13:16	1
Ethylbenzene	ND		1.0		ug/L			01/17/13 13:16	1
Ethylene Dibromide	ND		1.0		ug/L			01/17/13 13:16	1
Hexachlorobutadiene	ND		0.40		ug/L			01/17/13 13:16	1

Method: 8260C - Volatile Organic Compounds (GC/MS) (Continued)

Lab Sample ID: MB 480-99978/7
Matrix: Water
Analysis Batch: 99978

Client Sample ID: Method Blank
Prep Type: Total/NA

Analyte	MB Result	MB Qualifier	RL	MDL	Unit	D	Prepared	Analyzed	Dil Fac
Isopropyl ether	ND		10		ug/L			01/17/13 13:16	1
Isopropylbenzene	ND		1.0		ug/L			01/17/13 13:16	1
Methyl tert-butyl ether	ND		1.0		ug/L			01/17/13 13:16	1
Methylene Chloride	ND		1.0		ug/L			01/17/13 13:16	1
m-Xylene & p-Xylene	ND		2.0		ug/L			01/17/13 13:16	1
Naphthalene	ND		5.0		ug/L			01/17/13 13:16	1
n-Butylbenzene	ND		1.0		ug/L			01/17/13 13:16	1
N-Propylbenzene	ND		1.0		ug/L			01/17/13 13:16	1
o-Xylene	ND		1.0		ug/L			01/17/13 13:16	1
sec-Butylbenzene	ND		1.0		ug/L			01/17/13 13:16	1
Styrene	ND		1.0		ug/L			01/17/13 13:16	1
Tert-amyl methyl ether	ND		5.0		ug/L			01/17/13 13:16	1
Tert-butyl ethyl ether	ND		5.0		ug/L			01/17/13 13:16	1
tert-Butylbenzene	ND		1.0		ug/L			01/17/13 13:16	1
Tetrachloroethene	ND		1.0		ug/L			01/17/13 13:16	1
Tetrahydrofuran	ND		10		ug/L			01/17/13 13:16	1
Toluene	ND		1.0		ug/L			01/17/13 13:16	1
trans-1,2-Dichloroethene	ND		1.0		ug/L			01/17/13 13:16	1
trans-1,3-Dichloropropene	ND		0.40		ug/L			01/17/13 13:16	1
Trichloroethene	ND		1.0		ug/L			01/17/13 13:16	1
Trichlorofluoromethane	ND		1.0		ug/L			01/17/13 13:16	1
Vinyl chloride	ND		0.50		ug/L			01/17/13 13:16	1
Dibromomethane	ND		1.0		ug/L			01/17/13 13:16	1

Surrogate	*MB %Recovery*	*MB Qualifier*	*Limits*	*Prepared*	*Analyzed*	*Dil Fac*
Toluene-d8 (Surr)	*120*		*70 - 130*		*01/17/13 13:16*	*1*
1,2-Dichloroethane-d4 (Surr)	*106*		*70 - 130*		*01/17/13 13:16*	*1*
4-Bromofluorobenzene (Surr)	*119*		*70 - 130*		*01/17/13 13:16*	*1*

Lab Sample ID: LCS 480-99978/4
Matrix: Water
Analysis Batch: 99978

Client Sample ID: Lab Control Sample
Prep Type: Total/NA

Analyte	Spike Added	LCS Result	LCS Qualifier	Unit	D	%Rec	%Rec. Limits
1,1,1,2-Tetrachloroethane	25.0	27.4		ug/L		110	70 - 130
1,1,1-Trichloroethane	25.0	27.2		ug/L		109	70 - 130
1,1,2,2-Tetrachloroethane	25.0	25.1		ug/L		100	70 - 130
1,1,2-Trichloroethane	25.0	26.0		ug/L		104	70 - 130
1,1-Dichloroethane	25.0	26.5		ug/L		106	70 - 130
1,1-Dichloroethene	25.0	28.1		ug/L		113	70 - 130
1,1-Dichloropropene	25.0	28.1		ug/L		112	70 - 130
1,2,3-Trichlorobenzene	25.0	24.5		ug/L		98	70 - 130
1,2,3-Trichloropropane	25.0	25.1		ug/L		100	70 - 130
1,2,4-Trichlorobenzene	25.0	26.9		ug/L		108	70 - 130
1,2,4-Trimethylbenzene	25.0	26.8		ug/L		107	70 - 130
1,2-Dibromo-3-Chloropropane	25.0	24.9		ug/L		100	70 - 130
1,2-Dichlorobenzene	25.0	27.0		ug/L		108	70 - 130
1,2-Dichloroethane	25.0	24.8		ug/L		99	70 - 130

Method: 8260C - Volatile Organic Compounds (GC/MS) (Continued)

Lab Sample ID: LCS 480-99978/4
Matrix: Water
Analysis Batch: 99978

Client Sample ID: Lab Control Sample
Prep Type: Total/NA

Analyte	Spike Added	LCS Result	LCS Qualifier	Unit	D	%Rec	%Rec. Limits
1,2-Dichloropropane	25.0	26.6		ug/L		106	70 - 130
1,3,5-Trimethylbenzene	25.0	26.3		ug/L		105	70 - 130
1,3-Dichlorobenzene	25.0	27.5		ug/L		110	70 - 130
1,3-Dichloropropane	25.0	26.0		ug/L		104	70 - 130
1,4-Dichlorobenzene	25.0	26.8		ug/L		107	70 - 130
1,4-Dioxane	1000	1180		ug/L		118	70 - 130
2,2-Dichloropropane	25.0	26.5		ug/L		106	70 - 130
2-Butanone (MEK)	125	153		ug/L		122	70 - 130
2-Chlorotoluene	25.0	26.5		ug/L		106	70 - 130
2-Hexanone	125	110		ug/L		88	70 - 130
4-Chlorotoluene	25.0	24.1		ug/L		97	70 - 130
4-Isopropyltoluene	25.0	28.2		ug/L		113	70 - 130
4-Methyl-2-pentanone (MIBK)	125	111		ug/L		89	70 - 130
Acetone	125	112		ug/L		89	70 - 130
Benzene	25.0	27.6		ug/L		111	70 - 130
Bromobenzene	25.0	26.9		ug/L		108	70 - 130
Bromoform	25.0	26.8		ug/L		107	70 - 130
Bromomethane	25.0	24.5		ug/L		98	70 - 130
Carbon disulfide	25.0	28.0		ug/L		112	70 - 130
Carbon tetrachloride	25.0	27.3		ug/L		109	70 - 130
Chlorobenzene	25.0	28.3		ug/L		113	70 - 130
Chlorobromomethane	25.0	28.2		ug/L		113	70 - 130
Chlorodibromomethane	25.0	26.2		ug/L		105	70 - 130
Chloroethane	25.0	24.4		ug/L		98	70 - 130
Chloroform	25.0	26.2		ug/L		105	70 - 130
Chloromethane	25.0	26.9		ug/L		107	70 - 130
cis-1,2-Dichloroethene	25.0	27.5		ug/L		110	70 - 130
cis-1,3-Dichloropropene	25.0	27.0		ug/L		108	70 - 130
Dichlorobromomethane	25.0	26.2		ug/L		105	70 - 130
Dichlorodifluoromethane	50.0	54.5		ug/L		109	70 - 130
Ethyl ether	25.0	24.3		ug/L		97	70 - 130
Ethylbenzene	25.0	28.0		ug/L		112	70 - 130
Ethylene Dibromide	25.0	26.3		ug/L		105	70 - 130
Hexachlorobutadiene	25.0	26.3		ug/L		105	70 - 130
Isopropyl ether	25.0	23.8		ug/L		95	70 - 130
Isopropylbenzene	25.0	26.9		ug/L		108	70 - 130
Methyl tert-butyl ether	25.0	24.6		ug/L		98	70 - 130
Methylene Chloride	25.0	26.2		ug/L		105	70 - 130
m-Xylene & p-Xylene	50.0	56.3		ug/L		113	70 - 130
Naphthalene	25.0	25.3		ug/L		101	70 - 130
n-Butylbenzene	25.0	27.4		ug/L		110	70 - 130
N-Propylbenzene	25.0	26.3		ug/L		105	70 - 130
o-Xylene	25.0	27.8		ug/L		111	70 - 130
sec-Butylbenzene	25.0	27.7		ug/L		111	70 - 130
Styrene	25.0	27.1		ug/L		108	70 - 130
Tert-amyl methyl ether	25.0	24.6		ug/L		98	70 - 130
Tert-butyl ethyl ether	25.0	24.1		ug/L		97	70 - 130
tert-Butylbenzene	25.0	27.6		ug/L		110	70 - 130

Method: 8260C - Volatile Organic Compounds (GC/MS) (Continued)

Lab Sample ID: LCS 480-99978/4
Matrix: Water
Analysis Batch: 99978

Client Sample ID: Lab Control Sample
Prep Type: Total/NA

Analyte	Spike Added	LCS Result	LCS Qualifier	Unit	D	%Rec	%Rec. Limits
Tetrachloroethene	25.0	30.9		ug/L		124	70 - 130
Tetrahydrofuran	125	113		ug/L		91	70 - 130
Toluene	25.0	28.0		ug/L		112	70 - 130
trans-1,2-Dichloroethene	25.0	27.8		ug/L		111	70 - 130
trans-1,3-Dichloropropene	25.0	26.9		ug/L		107	70 - 130
Trichloroethene	25.0	28.2		ug/L		113	70 - 130
Trichlorofluoromethane	25.0	25.9		ug/L		104	70 - 130
Vinyl chloride	25.0	27.3		ug/L		109	70 - 130
Dibromomethane	25.0	26.2		ug/L		105	70 - 130

Surrogate	*LCS %Recovery*	*LCS Qualifier*	*Limits*
Toluene-d8 (Surr)	*121*		*70 - 130*
1,2-Dichloroethane-d4 (Surr)	*106*		*70 - 130*
4-Bromofluorobenzene (Surr)	*119*		*70 - 130*

Lab Sample ID: LCSD 480-99978/5
Matrix: Water
Analysis Batch: 99978

Client Sample ID: Lab Control Sample Dup
Prep Type: Total/NA

Analyte	Spike Added	LCSD Result	LCSD Qualifier	Unit	D	%Rec	%Rec. Limits	RPD	RPD Limit
1,1,1,2-Tetrachloroethane	25.0	27.6		ug/L		111	70 - 130	1	20
1,1,1-Trichloroethane	25.0	25.9		ug/L		103	70 - 130	5	20
1,1,2,2-Tetrachloroethane	25.0	24.6		ug/L		98	70 - 130	2	20
1,1,2-Trichloroethane	25.0	26.1		ug/L		104	70 - 130	0	20
1,1-Dichloroethane	25.0	25.5		ug/L		102	70 - 130	4	20
1,1-Dichloroethene	25.0	25.6		ug/L		102	70 - 130	9	20
1,1-Dichloropropene	25.0	26.8		ug/L		107	70 - 130	5	20
1,2,3-Trichlorobenzene	25.0	26.9		ug/L		108	70 - 130	10	20
1,2,3-Trichloropropane	25.0	24.5		ug/L		98	70 - 130	2	20
1,2,4-Trichlorobenzene	25.0	28.9		ug/L		115	70 - 130	7	20
1,2,4-Trimethylbenzene	25.0	26.4		ug/L		105	70 - 130	2	20
1,2-Dibromo-3-Chloropropane	25.0	24.2		ug/L		97	70 - 130	3	20
1,2-Dichlorobenzene	25.0	27.0		ug/L		108	70 - 130	0	20
1,2-Dichloroethane	25.0	23.8		ug/L		95	70 - 130	4	20
1,2-Dichloropropane	25.0	25.1		ug/L		100	70 - 130	6	20
1,3,5-Trimethylbenzene	25.0	26.3		ug/L		105	70 - 130	0	20
1,3-Dichlorobenzene	25.0	26.8		ug/L		107	70 - 130	2	20
1,3-Dichloropropane	25.0	25.7		ug/L		103	70 - 130	1	20
1,4-Dichlorobenzene	25.0	26.8		ug/L		107	70 - 130	0	20
1,4-Dioxane	1000	1600	*	ug/L		160	70 - 130	30	20
2,2-Dichloropropane	25.0	24.9		ug/L		100	70 - 130	6	20
2-Butanone (MEK)	125	152		ug/L		121	70 - 130	1	20
2-Chlorotoluene	25.0	27.0		ug/L		108	70 - 130	2	20
2-Hexanone	125	111		ug/L		89	70 - 130	1	20
4-Chlorotoluene	25.0	23.4		ug/L		94	70 - 130	3	20
4-Isopropyltoluene	25.0	27.8		ug/L		111	70 - 130	1	20
4-Methyl-2-pentanone (MIBK)	125	110		ug/L		88	70 - 130	1	20
Acetone	125	122		ug/L		98	70 - 130	9	20

Method: 8260C - Volatile Organic Compounds (GC/MS) (Continued)

Lab Sample ID: LCSD 480-99978/5
Matrix: Water
Analysis Batch: 99978

Client Sample ID: Lab Control Sample Dup
Prep Type: Total/NA

Analyte	Spike Added	LCSD Result	LCSD Qualifier	Unit	D	%Rec	%Rec. Limits	RPD	RPD Limit
Benzene	25.0	26.6		ug/L		106	70 - 130	4	20
Bromobenzene	25.0	26.7		ug/L		107	70 - 130	1	20
Bromoform	25.0	26.9		ug/L		108	70 - 130	0	20
Bromomethane	25.0	23.2		ug/L		93	70 - 130	5	20
Carbon disulfide	25.0	26.5		ug/L		106	70 - 130	5	20
Carbon tetrachloride	25.0	26.3		ug/L		105	70 - 130	3	20
Chlorobenzene	25.0	27.5		ug/L		110	70 - 130	3	20
Chlorobromomethane	25.0	27.2		ug/L		109	70 - 130	3	20
Chlorodibromomethane	25.0	26.8		ug/L		107	70 - 130	2	20
Chloroethane	25.0	23.4		ug/L		94	70 - 130	4	20
Chloroform	25.0	25.2		ug/L		101	70 - 130	4	20
Chloromethane	25.0	24.9		ug/L		100	70 - 130	8	20
cis-1,2-Dichloroethene	25.0	27.7		ug/L		111	70 - 130	0	20
cis-1,3-Dichloropropene	25.0	26.7		ug/L		107	70 - 130	1	20
Dichlorobromomethane	25.0	26.3		ug/L		105	70 - 130	0	20
Dichlorodifluoromethane	50.0	51.3		ug/L		103	70 - 130	6	20
Ethyl ether	25.0	23.3		ug/L		93	70 - 130	4	20
Ethylbenzene	25.0	27.1		ug/L		108	70 - 130	3	20
Ethylene Dibromide	25.0	26.6		ug/L		106	70 - 130	1	20
Hexachlorobutadiene	25.0	28.4		ug/L		114	70 - 130	7	20
Isopropyl ether	25.0	23.3		ug/L		93	70 - 130	2	20
Isopropylbenzene	25.0	26.2		ug/L		105	70 - 130	3	20
Methyl tert-butyl ether	25.0	24.4		ug/L		97	70 - 130	1	20
Methylene Chloride	25.0	25.5		ug/L		102	70 - 130	3	20
m-Xylene & p-Xylene	50.0	55.4		ug/L		111	70 - 130	2	20
Naphthalene	25.0	27.1		ug/L		108	70 - 130	7	20
n-Butylbenzene	25.0	27.2		ug/L		109	70 - 130	1	20
N-Propylbenzene	25.0	25.6		ug/L		102	70 - 130	3	20
o-Xylene	25.0	27.3		ug/L		109	70 - 130	2	20
sec-Butylbenzene	25.0	27.0		ug/L		108	70 - 130	3	20
Styrene	25.0	27.7		ug/L		111	70 - 130	2	20
Tert-amyl methyl ether	25.0	23.9		ug/L		95	70 - 130	3	20
Tert-butyl ethyl ether	25.0	23.8		ug/L		95	70 - 130	2	20
tert-Butylbenzene	25.0	27.1		ug/L		108	70 - 130	2	20
Tetrachloroethene	25.0	29.7		ug/L		119	70 - 130	4	20
Tetrahydrofuran	125	114		ug/L		91	70 - 130	0	20
Toluene	25.0	27.6		ug/L		110	70 - 130	1	20
trans-1,2-Dichloroethene	25.0	27.0		ug/L		108	70 - 130	3	20
trans-1,3-Dichloropropene	25.0	26.2		ug/L		105	70 - 130	2	20
Trichloroethene	25.0	27.0		ug/L		108	70 - 130	4	20
Trichlorofluoromethane	25.0	24.7		ug/L		99	70 - 130	5	20
Vinyl chloride	25.0	26.2		ug/L		105	70 - 130	4	20
Dibromomethane	25.0	26.2		ug/L		105	70 - 130	0	20

Surrogate	*LCSD %Recovery*	*LCSD Qualifier*	*Limits*
Toluene-d8 (Surr)	*121*		*70 - 130*
1,2-Dichloroethane-d4 (Surr)	*102*		*70 - 130*
4-Bromofluorobenzene (Surr)	*121*		*70 - 130*

QC Association Summary

Client: ERM-Northeast
Project/Site: IDS Wayland

TestAmerica Job ID: 480-31687-1

GC/MS VOA

Analysis Batch: 99978

Lab Sample ID	Client Sample ID	Prep Type	Matrix	Method	Prep Batch
480-31687-1	CS-01-20130116-01	Total/NA	Water	8260C	
480-31687-2	CS-02-20130116-01	Total/NA	Water	8260C	
480-31687-3	CS-03-20130116-01	Total/NA	Water	8260C	
480-31687-4	Dup-001-20130116-01	Total/NA	Water	8260C	
LCS 480-99978/4	Lab Control Sample	Total/NA	Water	8260C	
LCSD 480-99978/5	Lab Control Sample Dup	Total/NA	Water	8260C	
MB 480-99978/7	Method Blank	Total/NA	Water	8260C	

Analysis Batch: 100158

Lab Sample ID	Client Sample ID	Prep Type	Matrix	Method	Prep Batch
480-31687-5	Trip Blank	Total/NA	Water	8260C	
LCS 480-100158/4	Lab Control Sample	Total/NA	Water	8260C	
LCSD 480-100158/5	Lab Control Sample Dup	Total/NA	Water	8260C	
MB 480-100158/7	Method Blank	Total/NA	Water	8260C	

Lab Chronicle

Client: ERM-Northeast
Project/Site: IDS Wayland

TestAmerica Job ID: 480-31687-1

Client Sample ID: CS-01-20130116-01 — Lab Sample ID: 480-31687-1

Date Collected: 01/16/13 16:30 — **Matrix: Water**
Date Received: 01/17/13 02:10

Prep Type	Batch Type	Batch Method	Run	Dilution Factor	Batch Number	Prepared or Analyzed	Analyst	Lab
Total/NA	Analysis	8260C		1	99978	01/17/13 20:09	LH	TAL BUF

Client Sample ID: CS-02-20130116-01 — Lab Sample ID: 480-31687-2

Date Collected: 01/16/13 16:40 — **Matrix: Water**
Date Received: 01/17/13 02:10

Prep Type	Batch Type	Batch Method	Run	Dilution Factor	Batch Number	Prepared or Analyzed	Analyst	Lab
Total/NA	Analysis	8260C		1	99978	01/17/13 20:33	LH	TAL BUF

Client Sample ID: CS-03-20130116-01 — Lab Sample ID: 480-31687-3

Date Collected: 01/16/13 16:50 — **Matrix: Water**
Date Received: 01/17/13 02:10

Prep Type	Batch Type	Batch Method	Run	Dilution Factor	Batch Number	Prepared or Analyzed	Analyst	Lab
Total/NA	Analysis	8260C		1	99978	01/17/13 20:57	LH	TAL BUF

Client Sample ID: Dup-001-20130116-01 — Lab Sample ID: 480-31687-4

Date Collected: 01/16/13 00:00 — **Matrix: Water**
Date Received: 01/17/13 02:10

Prep Type	Batch Type	Batch Method	Run	Dilution Factor	Batch Number	Prepared or Analyzed	Analyst	Lab
Total/NA	Analysis	8260C		1	99978	01/17/13 21:20	LH	TAL BUF

Client Sample ID: Trip Blank — Lab Sample ID: 480-31687-5

Date Collected: 01/16/13 00:00 — **Matrix: Water**
Date Received: 01/17/13 02:10

Prep Type	Batch Type	Batch Method	Run	Dilution Factor	Batch Number	Prepared or Analyzed	Analyst	Lab
Total/NA	Analysis	8260C		1	100158	01/18/13 13:53	LH	TAL BUF

Laboratory References:

TAL BUF = TestAmerica Buffalo, 10 Hazelwood Drive, Amherst, NY 14228-2298, TEL (716)691-2600

Certification Summary

Client: ERM-Northeast
Project/Site: IDS Wayland

TestAmerica Job ID: 480-31687-1

Laboratory: TestAmerica Buffalo

All certifications held by this laboratory are listed. Not all certifications are applicable to this report.

Authority	Program	EPA Region	Certification ID	Expiration Date
Arkansas DEQ	State Program	6	88-0686	07-06-13
California	NELAP	9	1169CA	09-30-13
Connecticut	State Program	1	PH-0568	09-30-14
Florida	NELAP	4	E87672	06-30-13
Georgia	State Program	4	N/A	03-31-13
Georgia	State Program	4	956	06-30-13
Georgia	State Program	4	956	06-30-13
Illinois	NELAP	5	200003	09-30-13
Iowa	State Program	7	374	03-01-13
Kansas	NELAP	7	E-10187	01-31-13
Kentucky	State Program	4	90029	12-31-12
Kentucky (UST)	State Program	4	30	04-01-13
Louisiana	NELAP	6	02031	06-30-13
Maine	State Program	1	NY00044	12-04-13
Maryland	State Program	3	294	03-31-13
Massachusetts	State Program	1	M-NY044	06-30-13
Michigan	State Program	5	9937	04-01-13
Minnesota	NELAP	5	036-999-337	12-31-13
New Hampshire	NELAP	1	2973	09-11-13
New Hampshire	NELAP	1	2337	11-17-13
New Jersey	NELAP	2	NY455	06-30-13
New York	NELAP	2	10026	03-31-13
North Dakota	State Program	8	R-176	03-31-13
Oklahoma	State Program	6	9421	08-31-13
Oregon	NELAP	10	NY200003	06-09-13
Pennsylvania	NELAP	3	68-00281	07-31-13
Rhode Island	State Program	1	LAO00328	12-31-13
Tennessee	State Program	4	TN02970	04-01-13
Texas	NELAP	6	T104704412-11-2	07-31-13
USDA	Federal		P330-11-00386	11-22-14
Virginia	NELAP	3	460185	09-14-13
Washington	State Program	10	C784	02-10-13
West Virginia DEP	State Program	3	252	09-30-13
Wisconsin	State Program	5	998310390	08-31-13

Method Summary

Client: ERM-Northeast
Project/Site: IDS Wayland

TestAmerica Job ID: 480-31687-1

Method	Method Description	Protocol	Laboratory
8260C	Volatile Organic Compounds (GC/MS)	MA DEP	TAL BUF

Protocol References:

MA DEP = Massachusetts Department Of Environmental Protection

Laboratory References:

TAL BUF = TestAmerica Buffalo, 10 Hazelwood Drive, Amherst, NY 14228-2298, TEL (716)691-2600

Sample Summary

Client: ERM-Northeast
Project/Site: IDS Wayland

TestAmerica Job ID: 480-31687-1

Lab Sample ID	Client Sample ID	Matrix	Collected	Received
480-31687-1	CS-01-20130116-01	Water	01/16/13 16:30	01/17/13 02:10
480-31687-2	CS-02-20130116-01	Water	01/16/13 16:40	01/17/13 02:10
480-31687-3	CS-03-20130116-01	Water	01/16/13 16:50	01/17/13 02:10
480-31687-4	Dup-001-20130116-01	Water	01/16/13 00:00	01/17/13 02:10
480-31687-5	Trip Blank	Water	01/16/13 00:00	01/17/13 02:10

Login Sample Receipt Checklist

Client: ERM-Northeast

Job Number: 480-31687-1

Login Number: 31687
List Number: 1
Creator: Kolb, Chris M

List Source: TestAmerica Buffalo

Question	Answer	Comment
Radioactivity either was not measured or, if measured, is at or below background	N/A	
The cooler's custody seal, if present, is intact.	True	
The cooler or samples do not appear to have been compromised or tampered with.	True	
Samples were received on ice.	True	
Cooler Temperature is acceptable.	True	
Cooler Temperature is recorded.	True	
COC is present.	True	
COC is filled out in ink and legible.	True	
COC is filled out with all pertinent information.	True	
Is the Field Sampler's name present on COC?	True	
There are no discrepancies between the sample IDs on the containers and the COC.	False	No: Received Trip Blank(s) not listed on COC.
Samples are received within Holding Time.	True	
Sample containers have legible labels.	True	
Containers are not broken or leaking.	True	
Sample collection date/times are provided.	True	
Appropriate sample containers are used.	True	
Sample bottles are completely filled.	True	
Sample Preservation Verified	True	
There is sufficient vol. for all requested analyses, incl. any requested MS/MSDs	True	
VOA sample vials do not have headspace or bubble is <6mm (1/4") in diameter.	True	
If necessary, staff have been informed of any short hold time or quick TAT needs	True	
Multiphasic samples are not present.	True	
Samples do not require splitting or compositing.	True	
Sampling Company provided.	True	
Samples received within 48 hours of sampling.	True	
Samples requiring field filtration have been filtered in the field.	True	
Chlorine Residual checked.	N/A	

TestAmerica Westfield
Westfield Executive Park 53 Southampton Road
Westfield, MA 01085
Phone (413) 572-4000 Fax (413) 572-3707

Boston Service Center
240 Bear Hill Rd. Suite 104
Waltham, MA 02451
Phone (781) 466-6900 Fax (781) 466-6901

480-31687

Chain of Custody Record

TestAmerica
THE LEADER IN ENVIRONMENTAL TESTING

Client Information	Sampler: LARRY MASTERA	Lab PM: Becky MASON	Carrier Tracking No(s):	COC No: 22496
Client Contact: ERM JASON FLATTERY	Phone: (508) 542-3685	E-Mail:		Page: 1 of 1
Company: ERM				Job #: 0167058
Address: ONE BOSTON SL. PHL FLOOR	Due Date Requested: PRIOR to 01/25/2013			
City: BOSTON, MA	TAT Requested (days): 5 DAYS			
State, Zip: MA 02108				
Phone: (617) 646-7800	Quote #:			
Email: JASON.KLATTERY@ERM.COM	PO #:			
Project Name/number: 0167058 RAYTHEON WAYLAND	WO #:			
Site: WAYLAND, MA	SSOW#:			

Analysis Requested: VOCs 8260 (LSM)

Preservation Codes:
A - HCL; B - NaOH; C - Zn Acetate; D - Nitric Acid; E - NaHSO4; F - MeOH; H - Ascorbic Acid; I - Ice; J - DI Water; M - Hexane; N - None; P - Na2O4S; Q - Na2SO3; R - Na2S2SO3; S - H2SO4; Z - other (specify)

Regulatory programs: MCP ☑ GW1/S1 ☑; RCP ☐ CT RSR ☐; DEP Form ☐ EDD Required ☐

Sample Identification	Sample Date	Sample Time	Sample Type (C=comp, G=grab)	Matrix (W=water, S=solid, O=waste/oil, BT=Tissue, A=Air)	Sampler's Initials	Field Filtered Sample?	Perform MS/MSD?	VOCs 8260	Total Number of containers	Special Instructions/Note:
			Preservation Code:					A		
CS-01-20130116-01	01/16/2013	1630	C	W	LSM	N	N	X	3	
CS-02-20130116-01		1640	C	W				X	3	
CS-03-20130116-01		1650	C	W				X	3	
DUP-001-20130116-01		1111	C	W				X	3	

LSM

Possible Hazard Identification
☐ Non-Hazard ☐ Flammable ☑ Skin Irritant ☐ Poison B ☐ Unknown ☐ Radiological

Sample Disposal (A fee may be assessed if samples are retained longer than 1 month)
☐ Return To Client ☑ Disposal By Lab ☐ Archive For ____ Months

Deliverable Requested: I, II, III, IV, Other (specify)

Special Instructions/QC Requirements:

Relinquished by:	Date/Time:	Company	Received by:	Date/Time:	Company
[signature]	1750 01/16/2013	ERM	[signature]	1/16/13 1750	TAL
[signature]	1/16/13 1800	TAL	[signature]	01/17/13 0210	TA
Relinquished by:	Date/Time:	Company	Received by:	Date/Time:	Company

Custody Seals Intact: Δ Yes Δ No | Custody Seal No.: | Cooler Temperature(s) °C and Other Remarks: 3.8 ICE #13

TAL-8245-360 1111

TestAmerica

THE LEADER IN ENVIRONMENTAL TESTING

ANALYTICAL REPORT

TestAmerica Laboratories, Inc.
TestAmerica Buffalo
10 Hazelwood Drive
Amherst, NY 14228-2298
Tel: (716)691-2600

TestAmerica Job ID: 480-34733-1
Client Project/Site: IDS Wayland

For:
ERM-Northeast
One Beacon Steet
5th Floor
Boston, Massachusetts 02108

Attn: Jason Flattery

Authorized for release by:
3/29/2013 4:56:14 PM
Ryan VanDette
Project Manager I
ryan.vandette@testamericainc.com

Designee for

Becky Mason
Project Manager II
becky.mason@testamericainc.com

LINKS

Review your project results through TotalAccess

Have a Question? Ask The Expert

Visit us at: www.testamericainc.com

The test results in this report meet all 2003 NELAC and 2009 TNI requirements for accredited parameters, exceptions are noted in this report. This report may not be reproduced except in full, and with written approval from the laboratory. For questions please contact the Project Manager at the e-mail address or telephone number listed on this page.

This report has been electronically signed and authorized by the signatory. Electronic signature is intended to be the legally binding equivalent of a traditionally handwritten signature.

Results relate only to the items tested and the sample(s) as received by the laboratory.

Table of Contents

Cover Page 1
Table of Contents 2
Definitions/Glossary 3
Case Narrative 4
Detection Summary 7
Client Sample Results 9
Surrogate Summary 36
QC Sample Results 38
QC Association Summary 55
Lab Chronicle 57
Certification Summary 60
Method Summary 62
Sample Summary 63
Receipt Checklists 64
Chain of Custody 66

Definitions/Glossary

Client: ERM-Northeast
Project/Site: IDS Wayland

TestAmerica Job ID: 480-34733-1

Qualifiers

GC/MS VOA

Qualifier	Qualifier Description
*	LCS or LCSD exceeds the control limits

Glossary

Abbreviation	These commonly used abbreviations may or may not be present in this report.
¤	Listed under the "D" column to designate that the result is reported on a dry weight basis
%R	Percent Recovery
CNF	Contains no Free Liquid
DER	Duplicate error ratio (normalized absolute difference)
DL, RA, RE, IN	Indicates a Dilution, Re-analysis, Re-extraction, or additional Initial metals/anion analysis of the sample
DLC	Decision level concentration
MDA	Minimum detectable activity
EDL	Estimated Detection Limit
MDC	Minimum detectable concentration
MDL	Method Detection Limit
ML	Minimum Level (Dioxin)
ND	Not detected at the reporting limit (or MDL or EDL if shown)
PQL	Practical Quantitation Limit
QC	Quality Control
RER	Relative error ratio
RL	Reporting Limit or Requested Limit (Radiochemistry)
RPD	Relative Percent Difference, a measure of the relative difference between two points
TEF	Toxicity Equivalent Factor (Dioxin)
TEQ	Toxicity Equivalent Quotient (Dioxin)

Job ID: 480-34733-1

Laboratory: TestAmerica Buffalo

Narrative

Job Narrative
480-34733-1

With the exceptions noted as flags or footnotes, standard analytical protocols were followed in the analysis of the samples and no problems were encountered or anomalies observed. In addition all laboratory quality control samples were within established control limits, with any exceptions noted below. Each sample was analyzed to achieve the lowest possible reporting limit within the constraints of the method. In some cases, due to interference or analytes present at high concentrations, samples were diluted. For diluted samples, the reporting limits are adjusted relative to the dilution required.

Calculations are performed before rounding to avoid round-off errors in calculated results.

All holding times were met and proper preservation noted for the methods performed on these samples, unless otherwise detailed in the individual sections below.

TestAmerica's Reporting Limits (RLs) for this report may not always meet client specified method reporting limits due to various reasons such as methodology, dilutions, matrix or moisture content (soils). TestAmerica's pivot table EDD documents which compound(s) exceed certain regulatory standards. If not included with your deliverables, please contact your Project Manager about the availability of this EDD for your report.

Comments
No additional comments.

Receipt
The samples were received on 3/21/2013 1:00 AM; the samples arrived in good condition, properly preserved and, where required, on ice. The temperature of the cooler at receipt was 2.3º C.

Note: All samples that require thermal preservation are considered acceptable if the arrival temperature is within the method's specified temperature range or for general analysis, ranging from 6°C to just above the freezing temperature of water. Samples that are hand delivered, immediately following collection, may not meet these criteria; however, they will be considered acceptable according to NELAC and State standards, if there is evidence that the chilling process has begun, such as stored and transported to the laboratory on ice.

Except:

Sample was received with the container lid cracked. Volume was not compromised.

GC/MS VOA
Method(s) 8260C: The continuing calibration verification (CCV) for Bromomethane associated with batch 108441 recovered above the MCP upper control limit. MCP protocol allows for 20% of the target compounds to be outside the 20% difference but not over 40% difference.

Method(s) 8260C: The continuing calibration verification (CCV) for Ethyl ether and Isopropyl ether associated with batch 108441 recovered above the MCP upper control limit. MCP protocol allows for 20% of the target compounds to be outside the 20% difference but not over 40% difference.

Method(s) 8260, 8260C: The laboratory control sample (LCS) and / or the laboratory control sample duplicate (LCSD) for batch 108444 exceeded control limits for the following analyte: 2-Butanone (MEK). MCP/RCP protocol allows for 10% of the target compounds to be outside of the limits provided the recoveries are over 10%.

Method(s) 8260C: The following sample submitted for volatiles analysis was received with insufficient preservation (pH >2): MW1010M-20130320-01 (480-34733-1).

Method(s) 8260C: The following sample(s) was diluted to bring the concentration of target analytes within the calibration range: MW1025M-20130320-01 (480-34733-6). Elevated reporting limits (RLs) are provided.

Method(s) 8260C: The laboratory control sample (LCS) and / or the laboratory control sample duplicate (LCSD) for batch 108596

Job ID: 480-34733-1 (Continued)

Laboratory: TestAmerica Buffalo (Continued)

exceeded control limits for the following analytes: 2-Butanone. This is due to the coelution with Ethyl Acetate in the mega mix spike solution.

No other analytical or quality issues were noted.

GC/MS Semi VOA
No analytical or quality issues were noted.

Organic Prep
No analytical or quality issues were noted.

MassDEP Analytical Protocol Certification Form

Laboratory Name:	**TestAmerica Buffalo**	Project #:	**480-34733**
Project Location:	**IDS Wayland**	RTN:	

This form provides certifications for the following data set: list Laboratory Sample ID Number(s):

Matrices: [X] Groundwater/Surface Water [ ] Soil/Sediment [ ] Drinking Water [ ] Air [ ] Other:

CAM Protocols (check all that apply below):

8260 VOC CAM II A [X]	7470/7471 Hg CAM III B [ ]	Mass DEP VPH CAM IV A [ ]	8081 Pesticides CAM V B [ ]	7196 Hex Cr CAM VI B [ ]	Mass DEP APH CAM IX A [ ]
8270 SVOC CAM II B [ ]	7010 Metals CAM III C [ ]	Mass DEP EPH CAM IV B [ ]	8151 Herbicides CAM V C [ ]	8330 Explosives CAM VIII A [ ]	TO-15 VOC CAM IX B [ ]
6010 Metals CAM III A [ ]	6020 Metals CAM III D [ ]	8082 PCB CAM V A [ ]	9014 Total Cyanide/PAC CAM VI A [ ]	6860 Perchlorate CAM VIII B [ ]	

Affirmative Responses to Questions A through F are required for "Presumptive Certainty" status

A	Were all samples received in a condition consistent with those described on the Chain-of-Custody, properly preserved (including temperature) in the field or laboratory, and prepared/analyzed within method holding time.	[X] Yes [ ] No
B	Were the analytical method(s) and all associated QC requirements specified in the selected CAM protocol(s) followed?	[X] Yes [ ] No
C	Were all required corrective actions and analytical response actions specified in the selected CAM protocol(s) implemented for all identified performance standard non-conformances?	[X] Yes [ ] No
D	Does the laboratory report comply with all the reporting requirements specified in CAM VII A, "Quality Assurance and Quality Control Guidelines for the Acquisition and Reporting of Analytical Data"?	[X] Yes [ ] No
E	a. VPH, EPH and APH Methods only: Was each method conducted without significant modification(s)? (Refer to the individual method(s) for a list of significant modifications). b. APH and TO-15 Methods only: Was the complete analyte list reported for each method?	[ ] Yes [ ] No [ ] Yes [ ] No
F	Were all applicable CAM protocol QC and performance standard non-conformances identified and evaluated in a laboratory narrative (including all "No" responses to Questions A through E)?	[X] Yes [ ] No

Responses to Questions G, H and I below are required for "Presumptive Certainty" status

G	Were the reporting limits at or below all CAM reporting limits specified in the selected CAM protocol(s)?	[ ] Yes [X] No[1]

***Data User Note:* Data that achieve "Presumptive Certainty" status may not necessarily meet the data usability and representativeness requirements described in 310 CMR 40. 1056 (2)(k) and WCS-07-350**

H	Were **all** QC performance standards specified in the CAM protocol(s) achieved?	[ ] Yes [X] No[1]
I	Were results reported for the complete analyte list specified in the selected CAM protocol(s) ?	[X] Yes [ ] No[1]

[1] All negative responses must be addressed in an attached laboratory narrative.

I, the undersigned, attest under the pains and penalties of perjury that, based upon my personal inquiry of those responsible for obtaining the information, the material contained in this analytical report is, to the best of my knowledge and belief, is accurate and complete.

Signature:		Position:	Project Manager
Printed Name:	Ryan VanDette	Date:	3/29/2013 16:07:00 PM

Detection Summary

Client: ERM-Northeast
Project/Site: IDS Wayland

TestAmerica Job ID: 480-34733-1

Client Sample ID: MW1010M-20130320-01 — Lab Sample ID: 480-34733-1

No Detections.

Client Sample ID: MW1010D-20130320-01 — Lab Sample ID: 480-34733-2

Analyte	Result	Qualifier	RL	MDL	Unit	Dil Fac	D	Method	Prep Type
cis-1,2-Dichloroethene	1.1		1.0		ug/L	1		8260C	Total/NA
Trichloroethene	7.1		1.0		ug/L	1		8260C	Total/NA

Client Sample ID: MW1006-20130320-01 — Lab Sample ID: 480-34733-3

No Detections.

Client Sample ID: MW1030-20130320-01 — Lab Sample ID: 480-34733-4

Analyte	Result	Qualifier	RL	MDL	Unit	Dil Fac	D	Method	Prep Type
1,1,1-Trichloroethane	4.1		1.0		ug/L	1		8260C	Total/NA
1,1-Dichloroethene	2.4		1.0		ug/L	1		8260C	Total/NA
Methyl tert-butyl ether	12		1.0		ug/L	1		8260C	Total/NA
Trichloroethene	23		1.0		ug/L	1		8260C	Total/NA

Client Sample ID: MW1015D-20130320-01 — Lab Sample ID: 480-34733-5

Analyte	Result	Qualifier	RL	MDL	Unit	Dil Fac	D	Method	Prep Type
Chloroform	1.5		1.0		ug/L	1		8260C	Total/NA
cis-1,2-Dichloroethene	2.0		1.0		ug/L	1		8260C	Total/NA
Tetrachloroethene	3.4		1.0		ug/L	1		8260C	Total/NA
Trichloroethene	34		1.0		ug/L	1		8260C	Total/NA

Client Sample ID: MW1025M-20130320-01 — Lab Sample ID: 480-34733-6

Analyte	Result	Qualifier	RL	MDL	Unit	Dil Fac	D	Method	Prep Type
1,4-Dioxane	6.1		1.6		ug/L	1		8260B SIM	Total/NA
1,1,1-Trichloroethane	14		1.0		ug/L	1		8260C	Total/NA
1,1-Dichloroethane	4.5		1.0		ug/L	1		8260C	Total/NA
1,1-Dichloroethene	6.6		1.0		ug/L	1		8260C	Total/NA
cis-1,2-Dichloroethene	2.4		1.0		ug/L	1		8260C	Total/NA
Methyl tert-butyl ether	23		1.0		ug/L	1		8260C	Total/NA
Trichloroethene - DL	170		4.0		ug/L	4		8260C	Total/NA

Client Sample ID: MW1022-20130320-01 — Lab Sample ID: 480-34733-7

Analyte	Result	Qualifier	RL	MDL	Unit	Dil Fac	D	Method	Prep Type
cis-1,2-Dichloroethene	1.0		1.0		ug/L	1		8260C	Total/NA
Trichloroethene	2.7		1.0		ug/L	1		8260C	Total/NA

Client Sample ID: MW1023-20130320-01 — Lab Sample ID: 480-34733-8

Analyte	Result	Qualifier	RL	MDL	Unit	Dil Fac	D	Method	Prep Type
cis-1,2-Dichloroethene	6.6		1.0		ug/L	1		8260C	Total/NA
Trichloroethene	38		1.0		ug/L	1		8260C	Total/NA
1,4-Dioxane	0.65		0.20		ug/L	1		522 MOD	Total/NA

This Detection Summary does not include radiochemical test results.

Detection Summary

Client: ERM-Northeast
Project/Site: IDS Wayland

TestAmerica Job ID: 480-34733-1

Client Sample ID: DUP003-20130320-01 — Lab Sample ID: 480-34733-9

Analyte	Result	Qualifier	RL	MDL	Unit	Dil Fac	D	Method	Prep Type
cis-1,2-Dichloroethene	1.1		1.0		ug/L	1		8260C	Total/NA
Trichloroethene	2.9		1.0		ug/L	1		8260C	Total/NA

Client Sample ID: MW1033-20130320-01 — Lab Sample ID: 480-34733-10

Analyte	Result	Qualifier	RL	MDL	Unit	Dil Fac	D	Method	Prep Type
1,4-Dioxane	4.7		1.6		ug/L	1		8260B SIM	Total/NA
1,1-Dichloroethene	1.5		1.0		ug/L	1		8260C	Total/NA
cis-1,2-Dichloroethene	1.8		1.0		ug/L	1		8260C	Total/NA
Trichloroethene	14		1.0		ug/L	1		8260C	Total/NA
1,4-Dioxane	3.4		0.20		ug/L	1		522 MOD	Total/NA

Client Sample ID: MW1034-20130320-01 — Lab Sample ID: 480-34733-11

Analyte	Result	Qualifier	RL	MDL	Unit	Dil Fac	D	Method	Prep Type
cis-1,2-Dichloroethene	16		1.0		ug/L	1		8260C	Total/NA
Trichloroethene	39		1.0		ug/L	1		8260C	Total/NA
1,4-Dioxane	0.59		0.20		ug/L	1		522 MOD	Total/NA

Client Sample ID: DUP002-20130320-01 — Lab Sample ID: 480-34733-12

Analyte	Result	Qualifier	RL	MDL	Unit	Dil Fac	D	Method	Prep Type
1,1-Dichloroethene	1.4		1.0		ug/L	1		8260C	Total/NA
cis-1,2-Dichloroethene	1.8		1.0		ug/L	1		8260C	Total/NA
Trichloroethene	13		1.0		ug/L	1		8260C	Total/NA

Client Sample ID: MW1028-20130320-01 — Lab Sample ID: 480-34733-13

Analyte	Result	Qualifier	RL	MDL	Unit	Dil Fac	D	Method	Prep Type
cis-1,2-Dichloroethene	1.6		1.0		ug/L	1		8260C	Total/NA
Trichloroethene	6.8		1.0		ug/L	1		8260C	Total/NA

Client Sample ID: MW1027-20130320-01 — Lab Sample ID: 480-34733-14

No Detections.

Client Sample ID: TB001-20130320-01 — Lab Sample ID: 480-34733-15

No Detections.

This Detection Summary does not include radiochemical test results.

Client Sample ID: MW1010M-20130320-01
Date Collected: 03/20/13 11:30
Date Received: 03/21/13 07:24

Lab Sample ID: 480-34733-1
Matrix: Water

Method: 8260C - Volatile Organic Compounds (GC/MS)

Analyte	Result	Qualifier	RL	MDL	Unit	D	Prepared	Analyzed	Dil Fac
1,1,1,2-Tetrachloroethane	ND		1.0		ug/L			03/21/13 16:41	1
1,1,1-Trichloroethane	ND		1.0		ug/L			03/21/13 16:41	1
1,1,2,2-Tetrachloroethane	ND		0.50		ug/L			03/21/13 16:41	1
1,1,2-Trichloroethane	ND		1.0		ug/L			03/21/13 16:41	1
1,1-Dichloroethane	ND		1.0		ug/L			03/21/13 16:41	1
1,1-Dichloroethene	ND		1.0		ug/L			03/21/13 16:41	1
1,1-Dichloropropene	ND		1.0		ug/L			03/21/13 16:41	1
1,2,3-Trichlorobenzene	ND		1.0		ug/L			03/21/13 16:41	1
1,2,3-Trichloropropane	ND		1.0		ug/L			03/21/13 16:41	1
1,2,4-Trichlorobenzene	ND		1.0		ug/L			03/21/13 16:41	1
1,2,4-Trimethylbenzene	ND		1.0		ug/L			03/21/13 16:41	1
1,2-Dibromo-3-Chloropropane	ND		5.0		ug/L			03/21/13 16:41	1
1,2-Dichlorobenzene	ND		1.0		ug/L			03/21/13 16:41	1
1,2-Dichloroethane	ND		1.0		ug/L			03/21/13 16:41	1
1,2-Dichloropropane	ND		1.0		ug/L			03/21/13 16:41	1
1,3,5-Trimethylbenzene	ND		1.0		ug/L			03/21/13 16:41	1
1,3-Dichlorobenzene	ND		1.0		ug/L			03/21/13 16:41	1
1,3-Dichloropropane	ND		1.0		ug/L			03/21/13 16:41	1
1,4-Dichlorobenzene	ND		1.0		ug/L			03/21/13 16:41	1
1,4-Dioxane	ND		50		ug/L			03/21/13 16:41	1
2,2-Dichloropropane	ND		1.0		ug/L			03/21/13 16:41	1
2-Butanone (MEK)	ND	*	10		ug/L			03/21/13 16:41	1
2-Chlorotoluene	ND		1.0		ug/L			03/21/13 16:41	1
2-Hexanone	ND		10		ug/L			03/21/13 16:41	1
4-Chlorotoluene	ND		1.0		ug/L			03/21/13 16:41	1
4-Isopropyltoluene	ND		1.0		ug/L			03/21/13 16:41	1
4-Methyl-2-pentanone (MIBK)	ND		10		ug/L			03/21/13 16:41	1
Acetone	ND		50		ug/L			03/21/13 16:41	1
Benzene	ND		1.0		ug/L			03/21/13 16:41	1
Bromobenzene	ND		1.0		ug/L			03/21/13 16:41	1
Bromoform	ND		1.0		ug/L			03/21/13 16:41	1
Bromomethane	ND		2.0		ug/L			03/21/13 16:41	1
Carbon disulfide	ND		10		ug/L			03/21/13 16:41	1
Carbon tetrachloride	ND		1.0		ug/L			03/21/13 16:41	1
Chlorobenzene	ND		1.0		ug/L			03/21/13 16:41	1
Chlorobromomethane	ND		1.0		ug/L			03/21/13 16:41	1
Chlorodibromomethane	ND		0.50		ug/L			03/21/13 16:41	1
Chloroethane	ND		2.0		ug/L			03/21/13 16:41	1
Chloroform	ND		1.0		ug/L			03/21/13 16:41	1
Chloromethane	ND		2.0		ug/L			03/21/13 16:41	1
cis-1,2-Dichloroethene	ND		1.0		ug/L			03/21/13 16:41	1
cis-1,3-Dichloropropene	ND		0.40		ug/L			03/21/13 16:41	1
Dichlorobromomethane	ND		0.50		ug/L			03/21/13 16:41	1
Dichlorodifluoromethane	ND		1.0		ug/L			03/21/13 16:41	1
Ethyl ether	ND		1.0		ug/L			03/21/13 16:41	1
Ethylbenzene	ND		1.0		ug/L			03/21/13 16:41	1
Ethylene Dibromide	ND		1.0		ug/L			03/21/13 16:41	1
Hexachlorobutadiene	ND		0.40		ug/L			03/21/13 16:41	1
Isopropyl ether	ND		10		ug/L			03/21/13 16:41	1

Client Sample ID: MW1010M-20130320-01

Lab Sample ID: 480-34733-1

Date Collected: 03/20/13 11:30

Matrix: Water

Date Received: 03/21/13 07:24

Method: 8260C - Volatile Organic Compounds (GC/MS) (Continued)

Analyte	Result	Qualifier	RL	MDL	Unit	D	Prepared	Analyzed	Dil Fac
Isopropylbenzene	ND		1.0		ug/L			03/21/13 16:41	1
Methyl tert-butyl ether	ND		1.0		ug/L			03/21/13 16:41	1
Methylene Chloride	ND		1.0		ug/L			03/21/13 16:41	1
m-Xylene & p-Xylene	ND		2.0		ug/L			03/21/13 16:41	1
Naphthalene	ND		5.0		ug/L			03/21/13 16:41	1
n-Butylbenzene	ND		1.0		ug/L			03/21/13 16:41	1
N-Propylbenzene	ND		1.0		ug/L			03/21/13 16:41	1
o-Xylene	ND		1.0		ug/L			03/21/13 16:41	1
sec-Butylbenzene	ND		1.0		ug/L			03/21/13 16:41	1
Styrene	ND		1.0		ug/L			03/21/13 16:41	1
Tert-amyl methyl ether	ND		5.0		ug/L			03/21/13 16:41	1
Tert-butyl ethyl ether	ND		5.0		ug/L			03/21/13 16:41	1
tert-Butylbenzene	ND		1.0		ug/L			03/21/13 16:41	1
Tetrachloroethene	ND		1.0		ug/L			03/21/13 16:41	1
Tetrahydrofuran	ND		10		ug/L			03/21/13 16:41	1
Toluene	ND		1.0		ug/L			03/21/13 16:41	1
trans-1,2-Dichloroethene	ND		1.0		ug/L			03/21/13 16:41	1
trans-1,3-Dichloropropene	ND		0.40		ug/L			03/21/13 16:41	1
Trichloroethene	ND		1.0		ug/L			03/21/13 16:41	1
Trichlorofluoromethane	ND		1.0		ug/L			03/21/13 16:41	1
Vinyl chloride	ND		0.50		ug/L			03/21/13 16:41	1
Dibromomethane	ND		1.0		ug/L			03/21/13 16:41	1

Surrogate	*%Recovery*	*Qualifier*	*Limits*	*Prepared*	*Analyzed*	*Dil Fac*
Toluene-d8 (Surr)	*97*		*70 - 130*		*03/21/13 16:41*	*1*
1,2-Dichloroethane-d4 (Surr)	*96*		*70 - 130*		*03/21/13 16:41*	*1*
4-Bromofluorobenzene (Surr)	*102*		*70 - 130*		*03/21/13 16:41*	*1*

Client Sample ID: MW1010D-20130320-01

Lab Sample ID: 480-34733-2

Date Collected: 03/20/13 12:45

Matrix: Water

Date Received: 03/21/13 07:24

Method: 8260C - Volatile Organic Compounds (GC/MS)

Analyte	Result	Qualifier	RL	MDL	Unit	D	Prepared	Analyzed	Dil Fac
1,1,1,2-Tetrachloroethane	ND		1.0		ug/L			03/21/13 17:05	1
1,1,1-Trichloroethane	ND		1.0		ug/L			03/21/13 17:05	1
1,1,2,2-Tetrachloroethane	ND		0.50		ug/L			03/21/13 17:05	1
1,1,2-Trichloroethane	ND		1.0		ug/L			03/21/13 17:05	1
1,1-Dichloroethane	ND		1.0		ug/L			03/21/13 17:05	1
1,1-Dichloroethene	ND		1.0		ug/L			03/21/13 17:05	1
1,1-Dichloropropene	ND		1.0		ug/L			03/21/13 17:05	1
1,2,3-Trichlorobenzene	ND		1.0		ug/L			03/21/13 17:05	1
1,2,3-Trichloropropane	ND		1.0		ug/L			03/21/13 17:05	1
1,2,4-Trichlorobenzene	ND		1.0		ug/L			03/21/13 17:05	1
1,2,4-Trimethylbenzene	ND		1.0		ug/L			03/21/13 17:05	1
1,2-Dibromo-3-Chloropropane	ND		5.0		ug/L			03/21/13 17:05	1
1,2-Dichlorobenzene	ND		1.0		ug/L			03/21/13 17:05	1
1,2-Dichloroethane	ND		1.0		ug/L			03/21/13 17:05	1
1,2-Dichloropropane	ND		1.0		ug/L			03/21/13 17:05	1
1,3,5-Trimethylbenzene	ND		1.0		ug/L			03/21/13 17:05	1

Client: ERM-Northeast
Project/Site: IDS Wayland

TestAmerica Job ID: 480-34733-1

Client Sample ID: MW1010D-20130320-01
Date Collected: 03/20/13 12:45
Date Received: 03/21/13 07:24

Lab Sample ID: 480-34733-2
Matrix: Water

Method: 8260C - Volatile Organic Compounds (GC/MS) (Continued)

Analyte	Result	Qualifier	RL	MDL	Unit	D	Prepared	Analyzed	Dil Fac
1,3-Dichlorobenzene	ND		1.0		ug/L			03/21/13 17:05	1
1,3-Dichloropropane	ND		1.0		ug/L			03/21/13 17:05	1
1,4-Dichlorobenzene	ND		1.0		ug/L			03/21/13 17:05	1
1,4-Dioxane	ND		50		ug/L			03/21/13 17:05	1
2,2-Dichloropropane	ND		1.0		ug/L			03/21/13 17:05	1
2-Butanone (MEK)	ND	*	10		ug/L			03/21/13 17:05	1
2-Chlorotoluene	ND		1.0		ug/L			03/21/13 17:05	1
2-Hexanone	ND		10		ug/L			03/21/13 17:05	1
4-Chlorotoluene	ND		1.0		ug/L			03/21/13 17:05	1
4-Isopropyltoluene	ND		1.0		ug/L			03/21/13 17:05	1
4-Methyl-2-pentanone (MIBK)	ND		10		ug/L			03/21/13 17:05	1
Acetone	ND		50		ug/L			03/21/13 17:05	1
Benzene	ND		1.0		ug/L			03/21/13 17:05	1
Bromobenzene	ND		1.0		ug/L			03/21/13 17:05	1
Bromoform	ND		1.0		ug/L			03/21/13 17:05	1
Bromomethane	ND		2.0		ug/L			03/21/13 17:05	1
Carbon disulfide	ND		10		ug/L			03/21/13 17:05	1
Carbon tetrachloride	ND		1.0		ug/L			03/21/13 17:05	1
Chlorobenzene	ND		1.0		ug/L			03/21/13 17:05	1
Chlorobromomethane	ND		1.0		ug/L			03/21/13 17:05	1
Chlorodibromomethane	ND		0.50		ug/L			03/21/13 17:05	1
Chloroethane	ND		2.0		ug/L			03/21/13 17:05	1
Chloroform	ND		1.0		ug/L			03/21/13 17:05	1
Chloromethane	ND		2.0		ug/L			03/21/13 17:05	1
cis-1,2-Dichloroethene	**1.1**		1.0		ug/L			03/21/13 17:05	1
cis-1,3-Dichloropropene	ND		0.40		ug/L			03/21/13 17:05	1
Dichlorobromomethane	ND		0.50		ug/L			03/21/13 17:05	1
Dichlorodifluoromethane	ND		1.0		ug/L			03/21/13 17:05	1
Ethyl ether	ND		1.0		ug/L			03/21/13 17:05	1
Ethylbenzene	ND		1.0		ug/L			03/21/13 17:05	1
Ethylene Dibromide	ND		1.0		ug/L			03/21/13 17:05	1
Hexachlorobutadiene	ND		0.40		ug/L			03/21/13 17:05	1
Isopropyl ether	ND		10		ug/L			03/21/13 17:05	1
Isopropylbenzene	ND		1.0		ug/L			03/21/13 17:05	1
Methyl tert-butyl ether	ND		1.0		ug/L			03/21/13 17:05	1
Methylene Chloride	ND		1.0		ug/L			03/21/13 17:05	1
m-Xylene & p-Xylene	ND		2.0		ug/L			03/21/13 17:05	1
Naphthalene	ND		5.0		ug/L			03/21/13 17:05	1
n-Butylbenzene	ND		1.0		ug/L			03/21/13 17:05	1
N-Propylbenzene	ND		1.0		ug/L			03/21/13 17:05	1
o-Xylene	ND		1.0		ug/L			03/21/13 17:05	1
sec-Butylbenzene	ND		1.0		ug/L			03/21/13 17:05	1
Styrene	ND		1.0		ug/L			03/21/13 17:05	1
Tert-amyl methyl ether	ND		5.0		ug/L			03/21/13 17:05	1
Tert-butyl ethyl ether	ND		5.0		ug/L			03/21/13 17:05	1
tert-Butylbenzene	ND		1.0		ug/L			03/21/13 17:05	1
Tetrachloroethene	ND		1.0		ug/L			03/21/13 17:05	1
Tetrahydrofuran	ND		10		ug/L			03/21/13 17:05	1
Toluene	ND		1.0		ug/L			03/21/13 17:05	1

Client Sample ID: MW1010D-20130320-01

Lab Sample ID: 480-34733-2

Date Collected: 03/20/13 12:45

Matrix: Water

Date Received: 03/21/13 07:24

Method: 8260C - Volatile Organic Compounds (GC/MS) (Continued)

Analyte	Result	Qualifier	RL	MDL	Unit	D	Prepared	Analyzed	Dil Fac
trans-1,2-Dichloroethene	ND		1.0		ug/L			03/21/13 17:05	1
trans-1,3-Dichloropropene	ND		0.40		ug/L			03/21/13 17:05	1
Trichloroethene	**7.1**		1.0		ug/L			03/21/13 17:05	1
Trichlorofluoromethane	ND		1.0		ug/L			03/21/13 17:05	1
Vinyl chloride	ND		0.50		ug/L			03/21/13 17:05	1
Dibromomethane	ND		1.0		ug/L			03/21/13 17:05	1

Surrogate	*%Recovery*	*Qualifier*	*Limits*	*Prepared*	*Analyzed*	*Dil Fac*
Toluene-d8 (Surr)	*98*		*70 - 130*		*03/21/13 17:05*	*1*
1,2-Dichloroethane-d4 (Surr)	*96*		*70 - 130*		*03/21/13 17:05*	*1*
4-Bromofluorobenzene (Surr)	*102*		*70 - 130*		*03/21/13 17:05*	*1*

Client Sample ID: MW1006-20130320-01

Lab Sample ID: 480-34733-3

Date Collected: 03/20/13 14:00

Matrix: Water

Date Received: 03/21/13 07:24

Method: 8260C - Volatile Organic Compounds (GC/MS)

Analyte	Result	Qualifier	RL	MDL	Unit	D	Prepared	Analyzed	Dil Fac
1,1,1,2-Tetrachloroethane	ND		1.0		ug/L			03/21/13 17:29	1
1,1,1-Trichloroethane	ND		1.0		ug/L			03/21/13 17:29	1
1,1,2,2-Tetrachloroethane	ND		0.50		ug/L			03/21/13 17:29	1
1,1,2-Trichloroethane	ND		1.0		ug/L			03/21/13 17:29	1
1,1-Dichloroethane	ND		1.0		ug/L			03/21/13 17:29	1
1,1-Dichloroethene	ND		1.0		ug/L			03/21/13 17:29	1
1,1-Dichloropropene	ND		1.0		ug/L			03/21/13 17:29	1
1,2,3-Trichlorobenzene	ND		1.0		ug/L			03/21/13 17:29	1
1,2,3-Trichloropropane	ND		1.0		ug/L			03/21/13 17:29	1
1,2,4-Trichlorobenzene	ND		1.0		ug/L			03/21/13 17:29	1
1,2,4-Trimethylbenzene	ND		1.0		ug/L			03/21/13 17:29	1
1,2-Dibromo-3-Chloropropane	ND		5.0		ug/L			03/21/13 17:29	1
1,2-Dichlorobenzene	ND		1.0		ug/L			03/21/13 17:29	1
1,2-Dichloroethane	ND		1.0		ug/L			03/21/13 17:29	1
1,2-Dichloropropane	ND		1.0		ug/L			03/21/13 17:29	1
1,3,5-Trimethylbenzene	ND		1.0		ug/L			03/21/13 17:29	1
1,3-Dichlorobenzene	ND		1.0		ug/L			03/21/13 17:29	1
1,3-Dichloropropane	ND		1.0		ug/L			03/21/13 17:29	1
1,4-Dichlorobenzene	ND		1.0		ug/L			03/21/13 17:29	1
1,4-Dioxane	ND		50		ug/L			03/21/13 17:29	1
2,2-Dichloropropane	ND		1.0		ug/L			03/21/13 17:29	1
2-Butanone (MEK)	ND	*	10		ug/L			03/21/13 17:29	1
2-Chlorotoluene	ND		1.0		ug/L			03/21/13 17:29	1
2-Hexanone	ND		10		ug/L			03/21/13 17:29	1
4-Chlorotoluene	ND		1.0		ug/L			03/21/13 17:29	1
4-Isopropyltoluene	ND		1.0		ug/L			03/21/13 17:29	1
4-Methyl-2-pentanone (MIBK)	ND		10		ug/L			03/21/13 17:29	1
Acetone	ND		50		ug/L			03/21/13 17:29	1
Benzene	ND		1.0		ug/L			03/21/13 17:29	1
Bromobenzene	ND		1.0		ug/L			03/21/13 17:29	1
Bromoform	ND		1.0		ug/L			03/21/13 17:29	1
Bromomethane	ND		2.0		ug/L			03/21/13 17:29	1

Client Sample ID: MW1006-20130320-01
Date Collected: 03/20/13 14:00
Date Received: 03/21/13 07:24

Lab Sample ID: 480-34733-3
Matrix: Water

Method: 8260C - Volatile Organic Compounds (GC/MS) (Continued)

Analyte	Result	Qualifier	RL	MDL	Unit	D	Prepared	Analyzed	Dil Fac
Carbon disulfide	ND		10		ug/L			03/21/13 17:29	1
Carbon tetrachloride	ND		1.0		ug/L			03/21/13 17:29	1
Chlorobenzene	ND		1.0		ug/L			03/21/13 17:29	1
Chlorobromomethane	ND		1.0		ug/L			03/21/13 17:29	1
Chlorodibromomethane	ND		0.50		ug/L			03/21/13 17:29	1
Chloroethane	ND		2.0		ug/L			03/21/13 17:29	1
Chloroform	ND		1.0		ug/L			03/21/13 17:29	1
Chloromethane	ND		2.0		ug/L			03/21/13 17:29	1
cis-1,2-Dichloroethene	ND		1.0		ug/L			03/21/13 17:29	1
cis-1,3-Dichloropropene	ND		0.40		ug/L			03/21/13 17:29	1
Dichlorobromomethane	ND		0.50		ug/L			03/21/13 17:29	1
Dichlorodifluoromethane	ND		1.0		ug/L			03/21/13 17:29	1
Ethyl ether	ND		1.0		ug/L			03/21/13 17:29	1
Ethylbenzene	ND		1.0		ug/L			03/21/13 17:29	1
Ethylene Dibromide	ND		1.0		ug/L			03/21/13 17:29	1
Hexachlorobutadiene	ND		0.40		ug/L			03/21/13 17:29	1
Isopropyl ether	ND		10		ug/L			03/21/13 17:29	1
Isopropylbenzene	ND		1.0		ug/L			03/21/13 17:29	1
Methyl tert-butyl ether	ND		1.0		ug/L			03/21/13 17:29	1
Methylene Chloride	ND		1.0		ug/L			03/21/13 17:29	1
m-Xylene & p-Xylene	ND		2.0		ug/L			03/21/13 17:29	1
Naphthalene	ND		5.0		ug/L			03/21/13 17:29	1
n-Butylbenzene	ND		1.0		ug/L			03/21/13 17:29	1
N-Propylbenzene	ND		1.0		ug/L			03/21/13 17:29	1
o-Xylene	ND		1.0		ug/L			03/21/13 17:29	1
sec-Butylbenzene	ND		1.0		ug/L			03/21/13 17:29	1
Styrene	ND		1.0		ug/L			03/21/13 17:29	1
Tert-amyl methyl ether	ND		5.0		ug/L			03/21/13 17:29	1
Tert-butyl ethyl ether	ND		5.0		ug/L			03/21/13 17:29	1
tert-Butylbenzene	ND		1.0		ug/L			03/21/13 17:29	1
Tetrachloroethene	ND		1.0		ug/L			03/21/13 17:29	1
Tetrahydrofuran	ND		10		ug/L			03/21/13 17:29	1
Toluene	ND		1.0		ug/L			03/21/13 17:29	1
trans-1,2-Dichloroethene	ND		1.0		ug/L			03/21/13 17:29	1
trans-1,3-Dichloropropene	ND		0.40		ug/L			03/21/13 17:29	1
Trichloroethene	ND		1.0		ug/L			03/21/13 17:29	1
Trichlorofluoromethane	ND		1.0		ug/L			03/21/13 17:29	1
Vinyl chloride	ND		0.50		ug/L			03/21/13 17:29	1
Dibromomethane	ND		1.0		ug/L			03/21/13 17:29	1

Surrogate	*%Recovery*	*Qualifier*	*Limits*	*Prepared*	*Analyzed*	*Dil Fac*
Toluene-d8 (Surr)	*98*		*70 - 130*		*03/21/13 17:29*	*1*
1,2-Dichloroethane-d4 (Surr)	*98*		*70 - 130*		*03/21/13 17:29*	*1*
4-Bromofluorobenzene (Surr)	*100*		*70 - 130*		*03/21/13 17:29*	*1*

Client Sample Results

Client: ERM-Northeast
Project/Site: IDS Wayland

TestAmerica Job ID: 480-34733-1

Client Sample ID: MW1030-20130320-01

Lab Sample ID: 480-34733-4

Date Collected: 03/20/13 15:00

Matrix: Water

Date Received: 03/21/13 07:24

Method: 8260C - Volatile Organic Compounds (GC/MS)

Analyte	Result	Qualifier	RL	MDL	Unit	D	Prepared	Analyzed	Dil Fac
1,1,1,2-Tetrachloroethane	ND		1.0		ug/L			03/21/13 17:52	1
1,1,1-Trichloroethane	**4.1**		1.0		ug/L			03/21/13 17:52	1
1,1,2,2-Tetrachloroethane	ND		0.50		ug/L			03/21/13 17:52	1
1,1,2-Trichloroethane	ND		1.0		ug/L			03/21/13 17:52	1
1,1-Dichloroethane	ND		1.0		ug/L			03/21/13 17:52	1
1,1-Dichloroethene	**2.4**		1.0		ug/L			03/21/13 17:52	1
1,1-Dichloropropene	ND		1.0		ug/L			03/21/13 17:52	1
1,2,3-Trichlorobenzene	ND		1.0		ug/L			03/21/13 17:52	1
1,2,3-Trichloropropane	ND		1.0		ug/L			03/21/13 17:52	1
1,2,4-Trichlorobenzene	ND		1.0		ug/L			03/21/13 17:52	1
1,2,4-Trimethylbenzene	ND		1.0		ug/L			03/21/13 17:52	1
1,2-Dibromo-3-Chloropropane	ND		5.0		ug/L			03/21/13 17:52	1
1,2-Dichlorobenzene	ND		1.0		ug/L			03/21/13 17:52	1
1,2-Dichloroethane	ND		1.0		ug/L			03/21/13 17:52	1
1,2-Dichloropropane	ND		1.0		ug/L			03/21/13 17:52	1
1,3,5-Trimethylbenzene	ND		1.0		ug/L			03/21/13 17:52	1
1,3-Dichlorobenzene	ND		1.0		ug/L			03/21/13 17:52	1
1,3-Dichloropropane	ND		1.0		ug/L			03/21/13 17:52	1
1,4-Dichlorobenzene	ND		1.0		ug/L			03/21/13 17:52	1
1,4-Dioxane	ND		50		ug/L			03/21/13 17:52	1
2,2-Dichloropropane	ND		1.0		ug/L			03/21/13 17:52	1
2-Butanone (MEK)	ND	*	10		ug/L			03/21/13 17:52	1
2-Chlorotoluene	ND		1.0		ug/L			03/21/13 17:52	1
2-Hexanone	ND		10		ug/L			03/21/13 17:52	1
4-Chlorotoluene	ND		1.0		ug/L			03/21/13 17:52	1
4-Isopropyltoluene	ND		1.0		ug/L			03/21/13 17:52	1
4-Methyl-2-pentanone (MIBK)	ND		10		ug/L			03/21/13 17:52	1
Acetone	ND		50		ug/L			03/21/13 17:52	1
Benzene	ND		1.0		ug/L			03/21/13 17:52	1
Bromobenzene	ND		1.0		ug/L			03/21/13 17:52	1
Bromoform	ND		1.0		ug/L			03/21/13 17:52	1
Bromomethane	ND		2.0		ug/L			03/21/13 17:52	1
Carbon disulfide	ND		10		ug/L			03/21/13 17:52	1
Carbon tetrachloride	ND		1.0		ug/L			03/21/13 17:52	1
Chlorobenzene	ND		1.0		ug/L			03/21/13 17:52	1
Chlorobromomethane	ND		1.0		ug/L			03/21/13 17:52	1
Chlorodibromomethane	ND		0.50		ug/L			03/21/13 17:52	1
Chloroethane	ND		2.0		ug/L			03/21/13 17:52	1
Chloroform	ND		1.0		ug/L			03/21/13 17:52	1
Chloromethane	ND		2.0		ug/L			03/21/13 17:52	1
cis-1,2-Dichloroethene	ND		1.0		ug/L			03/21/13 17:52	1
cis-1,3-Dichloropropene	ND		0.40		ug/L			03/21/13 17:52	1
Dichlorobromomethane	ND		0.50		ug/L			03/21/13 17:52	1
Dichlorodifluoromethane	ND		1.0		ug/L			03/21/13 17:52	1
Ethyl ether	ND		1.0		ug/L			03/21/13 17:52	1
Ethylbenzene	ND		1.0		ug/L			03/21/13 17:52	1
Ethylene Dibromide	ND		1.0		ug/L			03/21/13 17:52	1
Hexachlorobutadiene	ND		0.40		ug/L			03/21/13 17:52	1
Isopropyl ether	ND		10		ug/L			03/21/13 17:52	1

Client Sample ID: MW1030-20130320-01

Lab Sample ID: 480-34733-4

Date Collected: 03/20/13 15:00

Matrix: Water

Date Received: 03/21/13 07:24

Method: 8260C - Volatile Organic Compounds (GC/MS) (Continued)

Analyte	Result	Qualifier	RL	MDL	Unit	D	Prepared	Analyzed	Dil Fac
Isopropylbenzene	ND		1.0		ug/L			03/21/13 17:52	1
Methyl tert-butyl ether	**12**		1.0		ug/L			03/21/13 17:52	1
Methylene Chloride	ND		1.0		ug/L			03/21/13 17:52	1
m-Xylene & p-Xylene	ND		2.0		ug/L			03/21/13 17:52	1
Naphthalene	ND		5.0		ug/L			03/21/13 17:52	1
n-Butylbenzene	ND		1.0		ug/L			03/21/13 17:52	1
N-Propylbenzene	ND		1.0		ug/L			03/21/13 17:52	1
o-Xylene	ND		1.0		ug/L			03/21/13 17:52	1
sec-Butylbenzene	ND		1.0		ug/L			03/21/13 17:52	1
Styrene	ND		1.0		ug/L			03/21/13 17:52	1
Tert-amyl methyl ether	ND		5.0		ug/L			03/21/13 17:52	1
Tert-butyl ethyl ether	ND		5.0		ug/L			03/21/13 17:52	1
tert-Butylbenzene	ND		1.0		ug/L			03/21/13 17:52	1
Tetrachloroethene	ND		1.0		ug/L			03/21/13 17:52	1
Tetrahydrofuran	ND		10		ug/L			03/21/13 17:52	1
Toluene	ND		1.0		ug/L			03/21/13 17:52	1
trans-1,2-Dichloroethene	ND		1.0		ug/L			03/21/13 17:52	1
trans-1,3-Dichloropropene	ND		0.40		ug/L			03/21/13 17:52	1
Trichloroethene	**23**		1.0		ug/L			03/21/13 17:52	1
Trichlorofluoromethane	ND		1.0		ug/L			03/21/13 17:52	1
Vinyl chloride	ND		0.50		ug/L			03/21/13 17:52	1
Dibromomethane	ND		1.0		ug/L			03/21/13 17:52	1

Surrogate	*%Recovery*	*Qualifier*	*Limits*	*Prepared*	*Analyzed*	*Dil Fac*
Toluene-d8 (Surr)	*96*		*70 - 130*		*03/21/13 17:52*	*1*
1,2-Dichloroethane-d4 (Surr)	*98*		*70 - 130*		*03/21/13 17:52*	*1*
4-Bromofluorobenzene (Surr)	*99*		*70 - 130*		*03/21/13 17:52*	*1*

Client Sample ID: MW1015D-20130320-01

Lab Sample ID: 480-34733-5

Date Collected: 03/20/13 12:10

Matrix: Water

Date Received: 03/21/13 07:24

Method: 8260C - Volatile Organic Compounds (GC/MS)

Analyte	Result	Qualifier	RL	MDL	Unit	D	Prepared	Analyzed	Dil Fac
1,1,1,2-Tetrachloroethane	ND		1.0		ug/L			03/21/13 18:16	1
1,1,1-Trichloroethane	ND		1.0		ug/L			03/21/13 18:16	1
1,1,2,2-Tetrachloroethane	ND		0.50		ug/L			03/21/13 18:16	1
1,1,2-Trichloroethane	ND		1.0		ug/L			03/21/13 18:16	1
1,1-Dichloroethane	ND		1.0		ug/L			03/21/13 18:16	1
1,1-Dichloroethene	ND		1.0		ug/L			03/21/13 18:16	1
1,1-Dichloropropene	ND		1.0		ug/L			03/21/13 18:16	1
1,2,3-Trichlorobenzene	ND		1.0		ug/L			03/21/13 18:16	1
1,2,3-Trichloropropane	ND		1.0		ug/L			03/21/13 18:16	1
1,2,4-Trichlorobenzene	ND		1.0		ug/L			03/21/13 18:16	1
1,2,4-Trimethylbenzene	ND		1.0		ug/L			03/21/13 18:16	1
1,2-Dibromo-3-Chloropropane	ND		5.0		ug/L			03/21/13 18:16	1
1,2-Dichlorobenzene	ND		1.0		ug/L			03/21/13 18:16	1
1,2-Dichloroethane	ND		1.0		ug/L			03/21/13 18:16	1
1,2-Dichloropropane	ND		1.0		ug/L			03/21/13 18:16	1
1,3,5-Trimethylbenzene	ND		1.0		ug/L			03/21/13 18:16	1

Client: ERM-Northeast
Project/Site: IDS Wayland

TestAmerica Job ID: 480-34733-1

Client Sample ID: MW1015D-20130320-01
Date Collected: 03/20/13 12:10
Date Received: 03/21/13 07:24

Lab Sample ID: 480-34733-5
Matrix: Water

Method: 8260C - Volatile Organic Compounds (GC/MS) (Continued)

Analyte	Result	Qualifier	RL	MDL	Unit	D	Prepared	Analyzed	Dil Fac
1,3-Dichlorobenzene	ND		1.0		ug/L			03/21/13 18:16	1
1,3-Dichloropropane	ND		1.0		ug/L			03/21/13 18:16	1
1,4-Dichlorobenzene	ND		1.0		ug/L			03/21/13 18:16	1
1,4-Dioxane	ND		50		ug/L			03/21/13 18:16	1
2,2-Dichloropropane	ND		1.0		ug/L			03/21/13 18:16	1
2-Butanone (MEK)	ND	*	10		ug/L			03/21/13 18:16	1
2-Chlorotoluene	ND		1.0		ug/L			03/21/13 18:16	1
2-Hexanone	ND		10		ug/L			03/21/13 18:16	1
4-Chlorotoluene	ND		1.0		ug/L			03/21/13 18:16	1
4-Isopropyltoluene	ND		1.0		ug/L			03/21/13 18:16	1
4-Methyl-2-pentanone (MIBK)	ND		10		ug/L			03/21/13 18:16	1
Acetone	ND		50		ug/L			03/21/13 18:16	1
Benzene	ND		1.0		ug/L			03/21/13 18:16	1
Bromobenzene	ND		1.0		ug/L			03/21/13 18:16	1
Bromoform	ND		1.0		ug/L			03/21/13 18:16	1
Bromomethane	ND		2.0		ug/L			03/21/13 18:16	1
Carbon disulfide	ND		10		ug/L			03/21/13 18:16	1
Carbon tetrachloride	ND		1.0		ug/L			03/21/13 18:16	1
Chlorobenzene	ND		1.0		ug/L			03/21/13 18:16	1
Chlorobromomethane	ND		1.0		ug/L			03/21/13 18:16	1
Chlorodibromomethane	ND		0.50		ug/L			03/21/13 18:16	1
Chloroethane	ND		2.0		ug/L			03/21/13 18:16	1
Chloroform	**1.5**		1.0		ug/L			03/21/13 18:16	1
Chloromethane	ND		2.0		ug/L			03/21/13 18:16	1
cis-1,2-Dichloroethene	**2.0**		1.0		ug/L			03/21/13 18:16	1
cis-1,3-Dichloropropene	ND		0.40		ug/L			03/21/13 18:16	1
Dichlorobromomethane	ND		0.50		ug/L			03/21/13 18:16	1
Dichlorodifluoromethane	ND		1.0		ug/L			03/21/13 18:16	1
Ethyl ether	ND		1.0		ug/L			03/21/13 18:16	1
Ethylbenzene	ND		1.0		ug/L			03/21/13 18:16	1
Ethylene Dibromide	ND		1.0		ug/L			03/21/13 18:16	1
Hexachlorobutadiene	ND		0.40		ug/L			03/21/13 18:16	1
Isopropyl ether	ND		10		ug/L			03/21/13 18:16	1
Isopropylbenzene	ND		1.0		ug/L			03/21/13 18:16	1
Methyl tert-butyl ether	ND		1.0		ug/L			03/21/13 18:16	1
Methylene Chloride	ND		1.0		ug/L			03/21/13 18:16	1
m-Xylene & p-Xylene	ND		2.0		ug/L			03/21/13 18:16	1
Naphthalene	ND		5.0		ug/L			03/21/13 18:16	1
n-Butylbenzene	ND		1.0		ug/L			03/21/13 18:16	1
N-Propylbenzene	ND		1.0		ug/L			03/21/13 18:16	1
o-Xylene	ND		1.0		ug/L			03/21/13 18:16	1
sec-Butylbenzene	ND		1.0		ug/L			03/21/13 18:16	1
Styrene	ND		1.0		ug/L			03/21/13 18:16	1
Tert-amyl methyl ether	ND		5.0		ug/L			03/21/13 18:16	1
Tert-butyl ethyl ether	ND		5.0		ug/L			03/21/13 18:16	1
tert-Butylbenzene	ND		1.0		ug/L			03/21/13 18:16	1
Tetrachloroethene	**3.4**		1.0		ug/L			03/21/13 18:16	1
Tetrahydrofuran	ND		10		ug/L			03/21/13 18:16	1
Toluene	ND		1.0		ug/L			03/21/13 18:16	1

Client Sample ID: MW1015D-20130320-01

Lab Sample ID: 480-34733-5

Date Collected: 03/20/13 12:10

Matrix: Water

Date Received: 03/21/13 07:24

Method: 8260C - Volatile Organic Compounds (GC/MS) (Continued)

Analyte	Result	Qualifier	RL	MDL	Unit	D	Prepared	Analyzed	Dil Fac
trans-1,2-Dichloroethene	ND		1.0		ug/L			03/21/13 18:16	1
trans-1,3-Dichloropropene	ND		0.40		ug/L			03/21/13 18:16	1
Trichloroethene	**34**		1.0		ug/L			03/21/13 18:16	1
Trichlorofluoromethane	ND		1.0		ug/L			03/21/13 18:16	1
Vinyl chloride	ND		0.50		ug/L			03/21/13 18:16	1
Dibromomethane	ND		1.0		ug/L			03/21/13 18:16	1

Surrogate	*%Recovery*	*Qualifier*	*Limits*	*Prepared*	*Analyzed*	*Dil Fac*
Toluene-d8 (Surr)	*98*		*70 - 130*		*03/21/13 18:16*	*1*
1,2-Dichloroethane-d4 (Surr)	*98*		*70 - 130*		*03/21/13 18:16*	*1*
4-Bromofluorobenzene (Surr)	*103*		*70 - 130*		*03/21/13 18:16*	*1*

Client Sample ID: MW1025M-20130320-01

Lab Sample ID: 480-34733-6

Date Collected: 03/20/13 14:40

Matrix: Water

Date Received: 03/21/13 07:24

Method: 8260B SIM - Volatile Organic Compounds (GC/MS)

Analyte	Result	Qualifier	RL	MDL	Unit	D	Prepared	Analyzed	Dil Fac
1,4-Dioxane	**6.1**		1.6		ug/L			03/25/13 13:37	1

Surrogate	*%Recovery*	*Qualifier*	*Limits*	*Prepared*	*Analyzed*	*Dil Fac*
TBA-d9 (Surr)	*106*		*50 - 150*		*03/25/13 13:37*	*1*
Dibromofluoromethane (Surr)	*88*		*50 - 150*		*03/25/13 13:37*	*1*

Method: 8260C - Volatile Organic Compounds (GC/MS)

Analyte	Result	Qualifier	RL	MDL	Unit	D	Prepared	Analyzed	Dil Fac
1,1,1,2-Tetrachloroethane	ND		1.0		ug/L			03/21/13 18:40	1
1,1,1-Trichloroethane	**14**		1.0		ug/L			03/21/13 18:40	1
1,1,2,2-Tetrachloroethane	ND		0.50		ug/L			03/21/13 18:40	1
1,1,2-Trichloroethane	ND		1.0		ug/L			03/21/13 18:40	1
1,1-Dichloroethane	**4.5**		1.0		ug/L			03/21/13 18:40	1
1,1-Dichloroethene	**6.6**		1.0		ug/L			03/21/13 18:40	1
1,1-Dichloropropene	ND		1.0		ug/L			03/21/13 18:40	1
1,2,3-Trichlorobenzene	ND		1.0		ug/L			03/21/13 18:40	1
1,2,3-Trichloropropane	ND		1.0		ug/L			03/21/13 18:40	1
1,2,4-Trichlorobenzene	ND		1.0		ug/L			03/21/13 18:40	1
1,2,4-Trimethylbenzene	ND		1.0		ug/L			03/21/13 18:40	1
1,2-Dibromo-3-Chloropropane	ND		5.0		ug/L			03/21/13 18:40	1
1,2-Dichlorobenzene	ND		1.0		ug/L			03/21/13 18:40	1
1,2-Dichloroethane	ND		1.0		ug/L			03/21/13 18:40	1
1,2-Dichloropropane	ND		1.0		ug/L			03/21/13 18:40	1
1,3,5-Trimethylbenzene	ND		1.0		ug/L			03/21/13 18:40	1
1,3-Dichlorobenzene	ND		1.0		ug/L			03/21/13 18:40	1
1,3-Dichloropropane	ND		1.0		ug/L			03/21/13 18:40	1
1,4-Dichlorobenzene	ND		1.0		ug/L			03/21/13 18:40	1
1,4-Dioxane	ND		50		ug/L			03/21/13 18:40	1
2,2-Dichloropropane	ND		1.0		ug/L			03/21/13 18:40	1
2-Butanone (MEK)	ND	*	10		ug/L			03/21/13 18:40	1
2-Chlorotoluene	ND		1.0		ug/L			03/21/13 18:40	1
2-Hexanone	ND		10		ug/L			03/21/13 18:40	1

Client Sample ID: MW1025M-20130320-01

Lab Sample ID: 480-34733-6

Date Collected: 03/20/13 14:40

Matrix: Water

Date Received: 03/21/13 07:24

Method: 8260C - Volatile Organic Compounds (GC/MS) (Continued)

Analyte	Result	Qualifier	RL	MDL	Unit	D	Prepared	Analyzed	Dil Fac
4-Chlorotoluene	ND		1.0		ug/L			03/21/13 18:40	1
4-Isopropyltoluene	ND		1.0		ug/L			03/21/13 18:40	1
4-Methyl-2-pentanone (MIBK)	ND		10		ug/L			03/21/13 18:40	1
Acetone	ND		50		ug/L			03/21/13 18:40	1
Benzene	ND		1.0		ug/L			03/21/13 18:40	1
Bromobenzene	ND		1.0		ug/L			03/21/13 18:40	1
Bromoform	ND		1.0		ug/L			03/21/13 18:40	1
Bromomethane	ND		2.0		ug/L			03/21/13 18:40	1
Carbon disulfide	ND		10		ug/L			03/21/13 18:40	1
Carbon tetrachloride	ND		1.0		ug/L			03/21/13 18:40	1
Chlorobenzene	ND		1.0		ug/L			03/21/13 18:40	1
Chlorobromomethane	ND		1.0		ug/L			03/21/13 18:40	1
Chlorodibromomethane	ND		0.50		ug/L			03/21/13 18:40	1
Chloroethane	ND		2.0		ug/L			03/21/13 18:40	1
Chloroform	ND		1.0		ug/L			03/21/13 18:40	1
Chloromethane	ND		2.0		ug/L			03/21/13 18:40	1
cis-1,2-Dichloroethene	**2.4**		1.0		ug/L			03/21/13 18:40	1
cis-1,3-Dichloropropene	ND		0.40		ug/L			03/21/13 18:40	1
Dichlorobromomethane	ND		0.50		ug/L			03/21/13 18:40	1
Dichlorodifluoromethane	ND		1.0		ug/L			03/21/13 18:40	1
Ethyl ether	ND		1.0		ug/L			03/21/13 18:40	1
Ethylbenzene	ND		1.0		ug/L			03/21/13 18:40	1
Ethylene Dibromide	ND		1.0		ug/L			03/21/13 18:40	1
Hexachlorobutadiene	ND		0.40		ug/L			03/21/13 18:40	1
Isopropyl ether	ND		10		ug/L			03/21/13 18:40	1
Isopropylbenzene	ND		1.0		ug/L			03/21/13 18:40	1
Methyl tert-butyl ether	**23**		1.0		ug/L			03/21/13 18:40	1
Methylene Chloride	ND		1.0		ug/L			03/21/13 18:40	1
m-Xylene & p-Xylene	ND		2.0		ug/L			03/21/13 18:40	1
Naphthalene	ND		5.0		ug/L			03/21/13 18:40	1
n-Butylbenzene	ND		1.0		ug/L			03/21/13 18:40	1
N-Propylbenzene	ND		1.0		ug/L			03/21/13 18:40	1
o-Xylene	ND		1.0		ug/L			03/21/13 18:40	1
sec-Butylbenzene	ND		1.0		ug/L			03/21/13 18:40	1
Styrene	ND		1.0		ug/L			03/21/13 18:40	1
Tert-amyl methyl ether	ND		5.0		ug/L			03/21/13 18:40	1
Tert-butyl ethyl ether	ND		5.0		ug/L			03/21/13 18:40	1
tert-Butylbenzene	ND		1.0		ug/L			03/21/13 18:40	1
Tetrachloroethene	ND		1.0		ug/L			03/21/13 18:40	1
Tetrahydrofuran	ND		10		ug/L			03/21/13 18:40	1
Toluene	ND		1.0		ug/L			03/21/13 18:40	1
trans-1,2-Dichloroethene	ND		1.0		ug/L			03/21/13 18:40	1
trans-1,3-Dichloropropene	ND		0.40		ug/L			03/21/13 18:40	1
Trichlorofluoromethane	ND		1.0		ug/L			03/21/13 18:40	1
Vinyl chloride	ND		0.50		ug/L			03/21/13 18:40	1
Dibromomethane	ND		1.0		ug/L			03/21/13 18:40	1

Surrogate	*%Recovery*	*Qualifier*	*Limits*	*Prepared*	*Analyzed*	*Dil Fac*
Toluene-d8 (Surr)	*97*		*70 - 130*		*03/21/13 18:40*	*1*
1,2-Dichloroethane-d4 (Surr)	*95*		*70 - 130*		*03/21/13 18:40*	*1*

Client Sample ID: MW1025M-20130320-01

Lab Sample ID: 480-34733-6

Date Collected: 03/20/13 14:40
Matrix: Water
Date Received: 03/21/13 07:24

Method: 8260C - Volatile Organic Compounds (GC/MS) (Continued)

Surrogate	*%Recovery*	*Qualifier*	*Limits*	*Prepared*	*Analyzed*	*Dil Fac*
4-Bromofluorobenzene (Surr)	*101*		*70 - 130*		*03/21/13 18:40*	*1*

Method: 8260C - Volatile Organic Compounds (GC/MS) - DL

Analyte	Result	Qualifier	RL	MDL	Unit	D	Prepared	Analyzed	Dil Fac
Trichloroethene	**170**		4.0		ug/L			03/22/13 02:36	4

Surrogate	*%Recovery*	*Qualifier*	*Limits*	*Prepared*	*Analyzed*	*Dil Fac*
Toluene-d8 (Surr)	*96*		*70 - 130*		*03/22/13 02:36*	*4*
1,2-Dichloroethane-d4 (Surr)	*96*		*70 - 130*		*03/22/13 02:36*	*4*
4-Bromofluorobenzene (Surr)	*100*		*70 - 130*		*03/22/13 02:36*	*4*

Client Sample ID: MW1022-20130320-01

Lab Sample ID: 480-34733-7

Date Collected: 03/20/13 13:00
Matrix: Water
Date Received: 03/21/13 07:24

Method: 8260B SIM - Volatile Organic Compounds (GC/MS)

Analyte	Result	Qualifier	RL	MDL	Unit	D	Prepared	Analyzed	Dil Fac
1,4-Dioxane	ND		1.6		ug/L			03/25/13 14:02	1

Surrogate	*%Recovery*	*Qualifier*	*Limits*	*Prepared*	*Analyzed*	*Dil Fac*
TBA-d9 (Surr)	*113*		*50 - 150*		*03/25/13 14:02*	*1*
Dibromofluoromethane (Surr)	*91*		*50 - 150*		*03/25/13 14:02*	*1*

Method: 8260C - Volatile Organic Compounds (GC/MS)

Analyte	Result	Qualifier	RL	MDL	Unit	D	Prepared	Analyzed	Dil Fac
1,1,1,2-Tetrachloroethane	ND		1.0		ug/L			03/21/13 17:42	1
1,1,1-Trichloroethane	ND		1.0		ug/L			03/21/13 17:42	1
1,1,2,2-Tetrachloroethane	ND		0.50		ug/L			03/21/13 17:42	1
1,1,2-Trichloroethane	ND		1.0		ug/L			03/21/13 17:42	1
1,1-Dichloroethane	ND		1.0		ug/L			03/21/13 17:42	1
1,1-Dichloroethene	ND		1.0		ug/L			03/21/13 17:42	1
1,1-Dichloropropene	ND		1.0		ug/L			03/21/13 17:42	1
1,2,3-Trichlorobenzene	ND		1.0		ug/L			03/21/13 17:42	1
1,2,3-Trichloropropane	ND		1.0		ug/L			03/21/13 17:42	1
1,2,4-Trichlorobenzene	ND		1.0		ug/L			03/21/13 17:42	1
1,2,4-Trimethylbenzene	ND		1.0		ug/L			03/21/13 17:42	1
1,2-Dibromo-3-Chloropropane	ND		5.0		ug/L			03/21/13 17:42	1
1,2-Dichlorobenzene	ND		1.0		ug/L			03/21/13 17:42	1
1,2-Dichloroethane	ND		1.0		ug/L			03/21/13 17:42	1
1,2-Dichloropropane	ND		1.0		ug/L			03/21/13 17:42	1
1,3,5-Trimethylbenzene	ND		1.0		ug/L			03/21/13 17:42	1
1,3-Dichlorobenzene	ND		1.0		ug/L			03/21/13 17:42	1
1,3-Dichloropropane	ND		1.0		ug/L			03/21/13 17:42	1
1,4-Dichlorobenzene	ND		1.0		ug/L			03/21/13 17:42	1
1,4-Dioxane	ND		50		ug/L			03/21/13 17:42	1
2,2-Dichloropropane	ND		1.0		ug/L			03/21/13 17:42	1
2-Butanone (MEK)	ND		10		ug/L			03/21/13 17:42	1
2-Chlorotoluene	ND		1.0		ug/L			03/21/13 17:42	1
2-Hexanone	ND		10		ug/L			03/21/13 17:42	1
4-Chlorotoluene	ND		1.0		ug/L			03/21/13 17:42	1

Client Sample ID: MW1022-20130320-01
Date Collected: 03/20/13 13:00
Date Received: 03/21/13 07:24

Lab Sample ID: 480-34733-7
Matrix: Water

Method: 8260C - Volatile Organic Compounds (GC/MS) (Continued)

Analyte	Result	Qualifier	RL	MDL	Unit	D	Prepared	Analyzed	Dil Fac
4-Isopropyltoluene	ND		1.0		ug/L			03/21/13 17:42	1
4-Methyl-2-pentanone (MIBK)	ND		10		ug/L			03/21/13 17:42	1
Acetone	ND		50		ug/L			03/21/13 17:42	1
Benzene	ND		1.0		ug/L			03/21/13 17:42	1
Bromobenzene	ND		1.0		ug/L			03/21/13 17:42	1
Bromoform	ND		1.0		ug/L			03/21/13 17:42	1
Bromomethane	ND		2.0		ug/L			03/21/13 17:42	1
Carbon disulfide	ND		10		ug/L			03/21/13 17:42	1
Carbon tetrachloride	ND		1.0		ug/L			03/21/13 17:42	1
Chlorobenzene	ND		1.0		ug/L			03/21/13 17:42	1
Chlorobromomethane	ND		1.0		ug/L			03/21/13 17:42	1
Chlorodibromomethane	ND		0.50		ug/L			03/21/13 17:42	1
Chloroethane	ND		2.0		ug/L			03/21/13 17:42	1
Chloroform	ND		1.0		ug/L			03/21/13 17:42	1
Chloromethane	ND		2.0		ug/L			03/21/13 17:42	1
cis-1,2-Dichloroethene	**1.0**		1.0		ug/L			03/21/13 17:42	1
cis-1,3-Dichloropropene	ND		0.40		ug/L			03/21/13 17:42	1
Dichlorobromomethane	ND		0.50		ug/L			03/21/13 17:42	1
Dichlorodifluoromethane	ND		1.0		ug/L			03/21/13 17:42	1
Ethyl ether	ND		1.0		ug/L			03/21/13 17:42	1
Ethylbenzene	ND		1.0		ug/L			03/21/13 17:42	1
Ethylene Dibromide	ND		1.0		ug/L			03/21/13 17:42	1
Hexachlorobutadiene	ND		0.40		ug/L			03/21/13 17:42	1
Isopropyl ether	ND		10		ug/L			03/21/13 17:42	1
Isopropylbenzene	ND		1.0		ug/L			03/21/13 17:42	1
Methyl tert-butyl ether	ND		1.0		ug/L			03/21/13 17:42	1
Methylene Chloride	ND		1.0		ug/L			03/21/13 17:42	1
m-Xylene & p-Xylene	ND		2.0		ug/L			03/21/13 17:42	1
Naphthalene	ND		5.0		ug/L			03/21/13 17:42	1
n-Butylbenzene	ND		1.0		ug/L			03/21/13 17:42	1
N-Propylbenzene	ND		1.0		ug/L			03/21/13 17:42	1
o-Xylene	ND		1.0		ug/L			03/21/13 17:42	1
sec-Butylbenzene	ND		1.0		ug/L			03/21/13 17:42	1
Styrene	ND		1.0		ug/L			03/21/13 17:42	1
Tert-amyl methyl ether	ND		5.0		ug/L			03/21/13 17:42	1
Tert-butyl ethyl ether	ND		5.0		ug/L			03/21/13 17:42	1
tert-Butylbenzene	ND		1.0		ug/L			03/21/13 17:42	1
Tetrachloroethene	ND		1.0		ug/L			03/21/13 17:42	1
Tetrahydrofuran	ND		10		ug/L			03/21/13 17:42	1
Toluene	ND		1.0		ug/L			03/21/13 17:42	1
trans-1,2-Dichloroethene	ND		1.0		ug/L			03/21/13 17:42	1
trans-1,3-Dichloropropene	ND		0.40		ug/L			03/21/13 17:42	1
Trichloroethene	**2.7**		1.0		ug/L			03/21/13 17:42	1
Trichlorofluoromethane	ND		1.0		ug/L			03/21/13 17:42	1
Vinyl chloride	ND		0.50		ug/L			03/21/13 17:42	1
Dibromomethane	ND		1.0		ug/L			03/21/13 17:42	1

Surrogate	*%Recovery*	*Qualifier*	*Limits*	*Prepared*	*Analyzed*	*Dil Fac*
Toluene-d8 (Surr)	*99*		*70 - 130*		*03/21/13 17:42*	*1*
1,2-Dichloroethane-d4 (Surr)	*93*		*70 - 130*		*03/21/13 17:42*	*1*

Client Sample ID: MW1022-20130320-01

Lab Sample ID: 480-34733-7

Date Collected: 03/20/13 13:00

Matrix: Water

Date Received: 03/21/13 07:24

Method: 8260C - Volatile Organic Compounds (GC/MS) (Continued)

Surrogate	*%Recovery*	*Qualifier*	*Limits*	*Prepared*	*Analyzed*	*Dil Fac*
4-Bromofluorobenzene (Surr)	*105*		*70 - 130*		*03/21/13 17:42*	*1*

Method: 522 MOD - 1,4 Dioxane (GC/MS SIM)

Analyte	Result	Qualifier	RL	MDL	Unit	D	Prepared	Analyzed	Dil Fac
1,4-Dioxane	ND		0.20		ug/L		03/27/13 14:05	03/27/13 18:58	1

Surrogate	*%Recovery*	*Qualifier*	*Limits*	*Prepared*	*Analyzed*	*Dil Fac*
1,4-Dioxane-d8 (Surr)	*88*		*70 - 130*	*03/27/13 14:05*	*03/27/13 18:58*	*1*

Client Sample ID: MW1023-20130320-01

Lab Sample ID: 480-34733-8

Date Collected: 03/20/13 15:10

Matrix: Water

Date Received: 03/21/13 07:24

Method: 8260B SIM - Volatile Organic Compounds (GC/MS)

Analyte	Result	Qualifier	RL	MDL	Unit	D	Prepared	Analyzed	Dil Fac
1,4-Dioxane	ND		1.6		ug/L			03/25/13 14:26	1

Surrogate	*%Recovery*	*Qualifier*	*Limits*	*Prepared*	*Analyzed*	*Dil Fac*
TBA-d9 (Surr)	*96*		*50 - 150*		*03/25/13 14:26*	*1*
Dibromofluoromethane (Surr)	*89*		*50 - 150*		*03/25/13 14:26*	*1*

Method: 8260C - Volatile Organic Compounds (GC/MS)

Analyte	Result	Qualifier	RL	MDL	Unit	D	Prepared	Analyzed	Dil Fac
1,1,1,2-Tetrachloroethane	ND		1.0		ug/L			03/21/13 18:08	1
1,1,1-Trichloroethane	ND		1.0		ug/L			03/21/13 18:08	1
1,1,2,2-Tetrachloroethane	ND		0.50		ug/L			03/21/13 18:08	1
1,1,2-Trichloroethane	ND		1.0		ug/L			03/21/13 18:08	1
1,1-Dichloroethane	ND		1.0		ug/L			03/21/13 18:08	1
1,1-Dichloroethene	ND		1.0		ug/L			03/21/13 18:08	1
1,1-Dichloropropene	ND		1.0		ug/L			03/21/13 18:08	1
1,2,3-Trichlorobenzene	ND		1.0		ug/L			03/21/13 18:08	1
1,2,3-Trichloropropane	ND		1.0		ug/L			03/21/13 18:08	1
1,2,4-Trichlorobenzene	ND		1.0		ug/L			03/21/13 18:08	1
1,2,4-Trimethylbenzene	ND		1.0		ug/L			03/21/13 18:08	1
1,2-Dibromo-3-Chloropropane	ND		5.0		ug/L			03/21/13 18:08	1
1,2-Dichlorobenzene	ND		1.0		ug/L			03/21/13 18:08	1
1,2-Dichloroethane	ND		1.0		ug/L			03/21/13 18:08	1
1,2-Dichloropropane	ND		1.0		ug/L			03/21/13 18:08	1
1,3,5-Trimethylbenzene	ND		1.0		ug/L			03/21/13 18:08	1
1,3-Dichlorobenzene	ND		1.0		ug/L			03/21/13 18:08	1
1,3-Dichloropropane	ND		1.0		ug/L			03/21/13 18:08	1
1,4-Dichlorobenzene	ND		1.0		ug/L			03/21/13 18:08	1
1,4-Dioxane	ND		50		ug/L			03/21/13 18:08	1
2,2-Dichloropropane	ND		1.0		ug/L			03/21/13 18:08	1
2-Butanone (MEK)	ND		10		ug/L			03/21/13 18:08	1
2-Chlorotoluene	ND		1.0		ug/L			03/21/13 18:08	1
2-Hexanone	ND		10		ug/L			03/21/13 18:08	1
4-Chlorotoluene	ND		1.0		ug/L			03/21/13 18:08	1
4-Isopropyltoluene	ND		1.0		ug/L			03/21/13 18:08	1
4-Methyl-2-pentanone (MIBK)	ND		10		ug/L			03/21/13 18:08	1

Client: ERM-Northeast
Project/Site: IDS Wayland

TestAmerica Job ID: 480-34733-1

Client Sample ID: MW1023-20130320-01
Date Collected: 03/20/13 15:10
Date Received: 03/21/13 07:24

Lab Sample ID: 480-34733-8
Matrix: Water

Method: 8260C - Volatile Organic Compounds (GC/MS) (Continued)

Analyte	Result	Qualifier	RL	MDL	Unit	D	Prepared	Analyzed	Dil Fac
Acetone	ND		50		ug/L			03/21/13 18:08	1
Benzene	ND		1.0		ug/L			03/21/13 18:08	1
Bromobenzene	ND		1.0		ug/L			03/21/13 18:08	1
Bromoform	ND		1.0		ug/L			03/21/13 18:08	1
Bromomethane	ND		2.0		ug/L			03/21/13 18:08	1
Carbon disulfide	ND		10		ug/L			03/21/13 18:08	1
Carbon tetrachloride	ND		1.0		ug/L			03/21/13 18:08	1
Chlorobenzene	ND		1.0		ug/L			03/21/13 18:08	1
Chlorobromomethane	ND		1.0		ug/L			03/21/13 18:08	1
Chlorodibromomethane	ND		0.50		ug/L			03/21/13 18:08	1
Chloroethane	ND		2.0		ug/L			03/21/13 18:08	1
Chloroform	ND		1.0		ug/L			03/21/13 18:08	1
Chloromethane	ND		2.0		ug/L			03/21/13 18:08	1
cis-1,2-Dichloroethene	**6.6**		1.0		ug/L			03/21/13 18:08	1
cis-1,3-Dichloropropene	ND		0.40		ug/L			03/21/13 18:08	1
Dichlorobromomethane	ND		0.50		ug/L			03/21/13 18:08	1
Dichlorodifluoromethane	ND		1.0		ug/L			03/21/13 18:08	1
Ethyl ether	ND		1.0		ug/L			03/21/13 18:08	1
Ethylbenzene	ND		1.0		ug/L			03/21/13 18:08	1
Ethylene Dibromide	ND		1.0		ug/L			03/21/13 18:08	1
Hexachlorobutadiene	ND		0.40		ug/L			03/21/13 18:08	1
Isopropyl ether	ND		10		ug/L			03/21/13 18:08	1
Isopropylbenzene	ND		1.0		ug/L			03/21/13 18:08	1
Methyl tert-butyl ether	ND		1.0		ug/L			03/21/13 18:08	1
Methylene Chloride	ND		1.0		ug/L			03/21/13 18:08	1
m-Xylene & p-Xylene	ND		2.0		ug/L			03/21/13 18:08	1
Naphthalene	ND		5.0		ug/L			03/21/13 18:08	1
n-Butylbenzene	ND		1.0		ug/L			03/21/13 18:08	1
N-Propylbenzene	ND		1.0		ug/L			03/21/13 18:08	1
o-Xylene	ND		1.0		ug/L			03/21/13 18:08	1
sec-Butylbenzene	ND		1.0		ug/L			03/21/13 18:08	1
Styrene	ND		1.0		ug/L			03/21/13 18:08	1
Tert-amyl methyl ether	ND		5.0		ug/L			03/21/13 18:08	1
Tert-butyl ethyl ether	ND		5.0		ug/L			03/21/13 18:08	1
tert-Butylbenzene	ND		1.0		ug/L			03/21/13 18:08	1
Tetrachloroethene	ND		1.0		ug/L			03/21/13 18:08	1
Tetrahydrofuran	ND		10		ug/L			03/21/13 18:08	1
Toluene	ND		1.0		ug/L			03/21/13 18:08	1
trans-1,2-Dichloroethene	ND		1.0		ug/L			03/21/13 18:08	1
trans-1,3-Dichloropropene	ND		0.40		ug/L			03/21/13 18:08	1
Trichloroethene	**38**		1.0		ug/L			03/21/13 18:08	1
Trichlorofluoromethane	ND		1.0		ug/L			03/21/13 18:08	1
Vinyl chloride	ND		0.50		ug/L			03/21/13 18:08	1
Dibromomethane	ND		1.0		ug/L			03/21/13 18:08	1

Surrogate	*%Recovery*	*Qualifier*	*Limits*	*Prepared*	*Analyzed*	*Dil Fac*
Toluene-d8 (Surr)	*98*		*70 - 130*		*03/21/13 18:08*	*1*
1,2-Dichloroethane-d4 (Surr)	*93*		*70 - 130*		*03/21/13 18:08*	*1*
4-Bromofluorobenzene (Surr)	*106*		*70 - 130*		*03/21/13 18:08*	*1*

Client Sample ID: MW1023-20130320-01

Lab Sample ID: 480-34733-8

Date Collected: 03/20/13 15:10

Matrix: Water

Date Received: 03/21/13 07:24

Method: 522 MOD - 1,4 Dioxane (GC/MS SIM)

Analyte	Result	Qualifier	RL	MDL	Unit	D	Prepared	Analyzed	Dil Fac
1,4-Dioxane	0.65		0.20		ug/L		03/27/13 14:05	03/27/13 19:14	1

Surrogate	*%Recovery*	*Qualifier*	*Limits*	*Prepared*	*Analyzed*	*Dil Fac*
1,4-Dioxane-d8 (Surr)	*85*		*70 - 130*	*03/27/13 14:05*	*03/27/13 19:14*	*1*

Client Sample ID: DUP003-20130320-01

Lab Sample ID: 480-34733-9

Date Collected: 03/20/13 14:14

Matrix: Water

Date Received: 03/21/13 07:24

Method: 8260C - Volatile Organic Compounds (GC/MS)

Analyte	Result	Qualifier	RL	MDL	Unit	D	Prepared	Analyzed	Dil Fac
1,1,1,2-Tetrachloroethane	ND		1.0		ug/L			03/21/13 18:33	1
1,1,1-Trichloroethane	ND		1.0		ug/L			03/21/13 18:33	1
1,1,2,2-Tetrachloroethane	ND		0.50		ug/L			03/21/13 18:33	1
1,1,2-Trichloroethane	ND		1.0		ug/L			03/21/13 18:33	1
1,1-Dichloroethane	ND		1.0		ug/L			03/21/13 18:33	1
1,1-Dichloroethene	ND		1.0		ug/L			03/21/13 18:33	1
1,1-Dichloropropene	ND		1.0		ug/L			03/21/13 18:33	1
1,2,3-Trichlorobenzene	ND		1.0		ug/L			03/21/13 18:33	1
1,2,3-Trichloropropane	ND		1.0		ug/L			03/21/13 18:33	1
1,2,4-Trichlorobenzene	ND		1.0		ug/L			03/21/13 18:33	1
1,2,4-Trimethylbenzene	ND		1.0		ug/L			03/21/13 18:33	1
1,2-Dibromo-3-Chloropropane	ND		5.0		ug/L			03/21/13 18:33	1
1,2-Dichlorobenzene	ND		1.0		ug/L			03/21/13 18:33	1
1,2-Dichloroethane	ND		1.0		ug/L			03/21/13 18:33	1
1,2-Dichloropropane	ND		1.0		ug/L			03/21/13 18:33	1
1,3,5-Trimethylbenzene	ND		1.0		ug/L			03/21/13 18:33	1
1,3-Dichlorobenzene	ND		1.0		ug/L			03/21/13 18:33	1
1,3-Dichloropropane	ND		1.0		ug/L			03/21/13 18:33	1
1,4-Dichlorobenzene	ND		1.0		ug/L			03/21/13 18:33	1
1,4-Dioxane	ND		50		ug/L			03/21/13 18:33	1
2,2-Dichloropropane	ND		1.0		ug/L			03/21/13 18:33	1
2-Butanone (MEK)	ND		10		ug/L			03/21/13 18:33	1
2-Chlorotoluene	ND		1.0		ug/L			03/21/13 18:33	1
2-Hexanone	ND		10		ug/L			03/21/13 18:33	1
4-Chlorotoluene	ND		1.0		ug/L			03/21/13 18:33	1
4-Isopropyltoluene	ND		1.0		ug/L			03/21/13 18:33	1
4-Methyl-2-pentanone (MIBK)	ND		10		ug/L			03/21/13 18:33	1
Acetone	ND		50		ug/L			03/21/13 18:33	1
Benzene	ND		1.0		ug/L			03/21/13 18:33	1
Bromobenzene	ND		1.0		ug/L			03/21/13 18:33	1
Bromoform	ND		1.0		ug/L			03/21/13 18:33	1
Bromomethane	ND		2.0		ug/L			03/21/13 18:33	1
Carbon disulfide	ND		10		ug/L			03/21/13 18:33	1
Carbon tetrachloride	ND		1.0		ug/L			03/21/13 18:33	1
Chlorobenzene	ND		1.0		ug/L			03/21/13 18:33	1
Chlorobromomethane	ND		1.0		ug/L			03/21/13 18:33	1
Chlorodibromomethane	ND		0.50		ug/L			03/21/13 18:33	1
Chloroethane	ND		2.0		ug/L			03/21/13 18:33	1
Chloroform	ND		1.0		ug/L			03/21/13 18:33	1

Client Sample ID: DUP003-20130320-01

Lab Sample ID: 480-34733-9

Date Collected: 03/20/13 14:14

Matrix: Water

Date Received: 03/21/13 07:24

Method: 8260C - Volatile Organic Compounds (GC/MS) (Continued)

Analyte	Result	Qualifier	RL	MDL	Unit	D	Prepared	Analyzed	Dil Fac
Chloromethane	ND		2.0		ug/L			03/21/13 18:33	1
cis-1,2-Dichloroethene	**1.1**		1.0		ug/L			03/21/13 18:33	1
cis-1,3-Dichloropropene	ND		0.40		ug/L			03/21/13 18:33	1
Dichlorobromomethane	ND		0.50		ug/L			03/21/13 18:33	1
Dichlorodifluoromethane	ND		1.0		ug/L			03/21/13 18:33	1
Ethyl ether	ND		1.0		ug/L			03/21/13 18:33	1
Ethylbenzene	ND		1.0		ug/L			03/21/13 18:33	1
Ethylene Dibromide	ND		1.0		ug/L			03/21/13 18:33	1
Hexachlorobutadiene	ND		0.40		ug/L			03/21/13 18:33	1
Isopropyl ether	ND		10		ug/L			03/21/13 18:33	1
Isopropylbenzene	ND		1.0		ug/L			03/21/13 18:33	1
Methyl tert-butyl ether	ND		1.0		ug/L			03/21/13 18:33	1
Methylene Chloride	ND		1.0		ug/L			03/21/13 18:33	1
m-Xylene & p-Xylene	ND		2.0		ug/L			03/21/13 18:33	1
Naphthalene	ND		5.0		ug/L			03/21/13 18:33	1
n-Butylbenzene	ND		1.0		ug/L			03/21/13 18:33	1
N-Propylbenzene	ND		1.0		ug/L			03/21/13 18:33	1
o-Xylene	ND		1.0		ug/L			03/21/13 18:33	1
sec-Butylbenzene	ND		1.0		ug/L			03/21/13 18:33	1
Styrene	ND		1.0		ug/L			03/21/13 18:33	1
Tert-amyl methyl ether	ND		5.0		ug/L			03/21/13 18:33	1
Tert-butyl ethyl ether	ND		5.0		ug/L			03/21/13 18:33	1
tert-Butylbenzene	ND		1.0		ug/L			03/21/13 18:33	1
Tetrachloroethene	ND		1.0		ug/L			03/21/13 18:33	1
Tetrahydrofuran	ND		10		ug/L			03/21/13 18:33	1
Toluene	ND		1.0		ug/L			03/21/13 18:33	1
trans-1,2-Dichloroethene	ND		1.0		ug/L			03/21/13 18:33	1
trans-1,3-Dichloropropene	ND		0.40		ug/L			03/21/13 18:33	1
Trichloroethene	**2.9**		1.0		ug/L			03/21/13 18:33	1
Trichlorofluoromethane	ND		1.0		ug/L			03/21/13 18:33	1
Vinyl chloride	ND		0.50		ug/L			03/21/13 18:33	1
Dibromomethane	ND		1.0		ug/L			03/21/13 18:33	1

Surrogate	*%Recovery*	*Qualifier*	*Limits*	*Prepared*	*Analyzed*	*Dil Fac*
Toluene-d8 (Surr)	*98*		*70 - 130*		*03/21/13 18:33*	*1*
1,2-Dichloroethane-d4 (Surr)	*93*		*70 - 130*		*03/21/13 18:33*	*1*
4-Bromofluorobenzene (Surr)	*107*		*70 - 130*		*03/21/13 18:33*	*1*

Client Sample ID: MW1033-20130320-01

Lab Sample ID: 480-34733-10

Date Collected: 03/20/13 12:25

Matrix: Water

Date Received: 03/21/13 07:24

Method: 8260B SIM - Volatile Organic Compounds (GC/MS)

Analyte	Result	Qualifier	RL	MDL	Unit	D	Prepared	Analyzed	Dil Fac
1,4-Dioxane	**4.7**		1.6		ug/L			03/25/13 14:50	1

Surrogate	*%Recovery*	*Qualifier*	*Limits*	*Prepared*	*Analyzed*	*Dil Fac*
TBA-d9 (Surr)	*110*		*50 - 150*		*03/25/13 14:50*	*1*
Dibromofluoromethane (Surr)	*92*		*50 - 150*		*03/25/13 14:50*	*1*

Client: ERM-Northeast
Project/Site: IDS Wayland

TestAmerica Job ID: 480-34733-1

Client Sample ID: MW1033-20130320-01
Date Collected: 03/20/13 12:25
Date Received: 03/21/13 07:24

Lab Sample ID: 480-34733-10
Matrix: Water

Method: 8260C - Volatile Organic Compounds (GC/MS)

Analyte	Result	Qualifier	RL	MDL	Unit	D	Prepared	Analyzed	Dil Fac
1,1,1,2-Tetrachloroethane	ND		1.0		ug/L			03/21/13 18:58	1
1,1,1-Trichloroethane	ND		1.0		ug/L			03/21/13 18:58	1
1,1,2,2-Tetrachloroethane	ND		0.50		ug/L			03/21/13 18:58	1
1,1,2-Trichloroethane	ND		1.0		ug/L			03/21/13 18:58	1
1,1-Dichloroethane	ND		1.0		ug/L			03/21/13 18:58	1
1,1-Dichloroethene	**1.5**		1.0		ug/L			03/21/13 18:58	1
1,1-Dichloropropene	ND		1.0		ug/L			03/21/13 18:58	1
1,2,3-Trichlorobenzene	ND		1.0		ug/L			03/21/13 18:58	1
1,2,3-Trichloropropane	ND		1.0		ug/L			03/21/13 18:58	1
1,2,4-Trichlorobenzene	ND		1.0		ug/L			03/21/13 18:58	1
1,2,4-Trimethylbenzene	ND		1.0		ug/L			03/21/13 18:58	1
1,2-Dibromo-3-Chloropropane	ND		5.0		ug/L			03/21/13 18:58	1
1,2-Dichlorobenzene	ND		1.0		ug/L			03/21/13 18:58	1
1,2-Dichloroethane	ND		1.0		ug/L			03/21/13 18:58	1
1,2-Dichloropropane	ND		1.0		ug/L			03/21/13 18:58	1
1,3,5-Trimethylbenzene	ND		1.0		ug/L			03/21/13 18:58	1
1,3-Dichlorobenzene	ND		1.0		ug/L			03/21/13 18:58	1
1,3-Dichloropropane	ND		1.0		ug/L			03/21/13 18:58	1
1,4-Dichlorobenzene	ND		1.0		ug/L			03/21/13 18:58	1
1,4-Dioxane	ND		50		ug/L			03/21/13 18:58	1
2,2-Dichloropropane	ND		1.0		ug/L			03/21/13 18:58	1
2-Butanone (MEK)	ND		10		ug/L			03/21/13 18:58	1
2-Chlorotoluene	ND		1.0		ug/L			03/21/13 18:58	1
2-Hexanone	ND		10		ug/L			03/21/13 18:58	1
4-Chlorotoluene	ND		1.0		ug/L			03/21/13 18:58	1
4-Isopropyltoluene	ND		1.0		ug/L			03/21/13 18:58	1
4-Methyl-2-pentanone (MIBK)	ND		10		ug/L			03/21/13 18:58	1
Acetone	ND		50		ug/L			03/21/13 18:58	1
Benzene	ND		1.0		ug/L			03/21/13 18:58	1
Bromobenzene	ND		1.0		ug/L			03/21/13 18:58	1
Bromoform	ND		1.0		ug/L			03/21/13 18:58	1
Bromomethane	ND		2.0		ug/L			03/21/13 18:58	1
Carbon disulfide	ND		10		ug/L			03/21/13 18:58	1
Carbon tetrachloride	ND		1.0		ug/L			03/21/13 18:58	1
Chlorobenzene	ND		1.0		ug/L			03/21/13 18:58	1
Chlorobromomethane	ND		1.0		ug/L			03/21/13 18:58	1
Chlorodibromomethane	ND		0.50		ug/L			03/21/13 18:58	1
Chloroethane	ND		2.0		ug/L			03/21/13 18:58	1
Chloroform	ND		1.0		ug/L			03/21/13 18:58	1
Chloromethane	ND		2.0		ug/L			03/21/13 18:58	1
cis-1,2-Dichloroethene	**1.8**		1.0		ug/L			03/21/13 18:58	1
cis-1,3-Dichloropropene	ND		0.40		ug/L			03/21/13 18:58	1
Dichlorobromomethane	ND		0.50		ug/L			03/21/13 18:58	1
Dichlorodifluoromethane	ND		1.0		ug/L			03/21/13 18:58	1
Ethyl ether	ND		1.0		ug/L			03/21/13 18:58	1
Ethylbenzene	ND		1.0		ug/L			03/21/13 18:58	1
Ethylene Dibromide	ND		1.0		ug/L			03/21/13 18:58	1
Hexachlorobutadiene	ND		0.40		ug/L			03/21/13 18:58	1
Isopropyl ether	ND		10		ug/L			03/21/13 18:58	1

Client Sample ID: MW1033-20130320-01

Lab Sample ID: 480-34733-10

Date Collected: 03/20/13 12:25
Matrix: Water
Date Received: 03/21/13 07:24

Method: 8260C - Volatile Organic Compounds (GC/MS) (Continued)

Analyte	Result	Qualifier	RL	MDL	Unit	D	Prepared	Analyzed	Dil Fac
Isopropylbenzene	ND		1.0		ug/L			03/21/13 18:58	1
Methyl tert-butyl ether	ND		1.0		ug/L			03/21/13 18:58	1
Methylene Chloride	ND		1.0		ug/L			03/21/13 18:58	1
m-Xylene & p-Xylene	ND		2.0		ug/L			03/21/13 18:58	1
Naphthalene	ND		5.0		ug/L			03/21/13 18:58	1
n-Butylbenzene	ND		1.0		ug/L			03/21/13 18:58	1
N-Propylbenzene	ND		1.0		ug/L			03/21/13 18:58	1
o-Xylene	ND		1.0		ug/L			03/21/13 18:58	1
sec-Butylbenzene	ND		1.0		ug/L			03/21/13 18:58	1
Styrene	ND		1.0		ug/L			03/21/13 18:58	1
Tert-amyl methyl ether	ND		5.0		ug/L			03/21/13 18:58	1
Tert-butyl ethyl ether	ND		5.0		ug/L			03/21/13 18:58	1
tert-Butylbenzene	ND		1.0		ug/L			03/21/13 18:58	1
Tetrachloroethene	ND		1.0		ug/L			03/21/13 18:58	1
Tetrahydrofuran	ND		10		ug/L			03/21/13 18:58	1
Toluene	ND		1.0		ug/L			03/21/13 18:58	1
trans-1,2-Dichloroethene	ND		1.0		ug/L			03/21/13 18:58	1
trans-1,3-Dichloropropene	ND		0.40		ug/L			03/21/13 18:58	1
Trichloroethene	**14**		1.0		ug/L			03/21/13 18:58	1
Trichlorofluoromethane	ND		1.0		ug/L			03/21/13 18:58	1
Vinyl chloride	ND		0.50		ug/L			03/21/13 18:58	1
Dibromomethane	ND		1.0		ug/L			03/21/13 18:58	1

Surrogate	*%Recovery*	*Qualifier*	*Limits*	*Prepared*	*Analyzed*	*Dil Fac*
Toluene-d8 (Surr)	*100*		*70 - 130*		*03/21/13 18:58*	*1*
1,2-Dichloroethane-d4 (Surr)	*95*		*70 - 130*		*03/21/13 18:58*	*1*
4-Bromofluorobenzene (Surr)	*107*		*70 - 130*		*03/21/13 18:58*	*1*

Method: 522 MOD - 1,4 Dioxane (GC/MS SIM)

Analyte	Result	Qualifier	RL	MDL	Unit	D	Prepared	Analyzed	Dil Fac
1,4-Dioxane	**3.4**		0.20		ug/L		03/27/13 14:05	03/27/13 19:30	1

Surrogate	*%Recovery*	*Qualifier*	*Limits*	*Prepared*	*Analyzed*	*Dil Fac*
1,4-Dioxane-d8 (Surr)	*78*		*70 - 130*	*03/27/13 14:05*	*03/27/13 19:30*	*1*

Client Sample ID: MW1034-20130320-01

Lab Sample ID: 480-34733-11

Date Collected: 03/20/13 11:15
Matrix: Water
Date Received: 03/21/13 07:24

Method: 8260B SIM - Volatile Organic Compounds (GC/MS)

Analyte	Result	Qualifier	RL	MDL	Unit	D	Prepared	Analyzed	Dil Fac
1,4-Dioxane	ND		1.6		ug/L			03/25/13 15:14	1

Surrogate	*%Recovery*	*Qualifier*	*Limits*	*Prepared*	*Analyzed*	*Dil Fac*
TBA-d9 (Surr)	*99*		*50 - 150*		*03/25/13 15:14*	*1*
Dibromofluoromethane (Surr)	*89*		*50 - 150*		*03/25/13 15:14*	*1*

Method: 8260C - Volatile Organic Compounds (GC/MS)

Analyte	Result	Qualifier	RL	MDL	Unit	D	Prepared	Analyzed	Dil Fac
1,1,1,2-Tetrachloroethane	ND		1.0		ug/L			03/21/13 19:23	1
1,1,1-Trichloroethane	ND		1.0		ug/L			03/21/13 19:23	1

Client Sample ID: MW1034-20130320-01
Date Collected: 03/20/13 11:15
Date Received: 03/21/13 07:24

Lab Sample ID: 480-34733-11
Matrix: Water

Method: 8260C - Volatile Organic Compounds (GC/MS) (Continued)

Analyte	Result	Qualifier	RL	MDL	Unit	D	Prepared	Analyzed	Dil Fac
1,1,2,2-Tetrachloroethane	ND		0.50		ug/L			03/21/13 19:23	1
1,1,2-Trichloroethane	ND		1.0		ug/L			03/21/13 19:23	1
1,1-Dichloroethane	ND		1.0		ug/L			03/21/13 19:23	1
1,1-Dichloroethene	ND		1.0		ug/L			03/21/13 19:23	1
1,1-Dichloropropene	ND		1.0		ug/L			03/21/13 19:23	1
1,2,3-Trichlorobenzene	ND		1.0		ug/L			03/21/13 19:23	1
1,2,3-Trichloropropane	ND		1.0		ug/L			03/21/13 19:23	1
1,2,4-Trichlorobenzene	ND		1.0		ug/L			03/21/13 19:23	1
1,2,4-Trimethylbenzene	ND		1.0		ug/L			03/21/13 19:23	1
1,2-Dibromo-3-Chloropropane	ND		5.0		ug/L			03/21/13 19:23	1
1,2-Dichlorobenzene	ND		1.0		ug/L			03/21/13 19:23	1
1,2-Dichloroethane	ND		1.0		ug/L			03/21/13 19:23	1
1,2-Dichloropropane	ND		1.0		ug/L			03/21/13 19:23	1
1,3,5-Trimethylbenzene	ND		1.0		ug/L			03/21/13 19:23	1
1,3-Dichlorobenzene	ND		1.0		ug/L			03/21/13 19:23	1
1,3-Dichloropropane	ND		1.0		ug/L			03/21/13 19:23	1
1,4-Dichlorobenzene	ND		1.0		ug/L			03/21/13 19:23	1
1,4-Dioxane	ND		50		ug/L			03/21/13 19:23	1
2,2-Dichloropropane	ND		1.0		ug/L			03/21/13 19:23	1
2-Butanone (MEK)	ND		10		ug/L			03/21/13 19:23	1
2-Chlorotoluene	ND		1.0		ug/L			03/21/13 19:23	1
2-Hexanone	ND		10		ug/L			03/21/13 19:23	1
4-Chlorotoluene	ND		1.0		ug/L			03/21/13 19:23	1
4-Isopropyltoluene	ND		1.0		ug/L			03/21/13 19:23	1
4-Methyl-2-pentanone (MIBK)	ND		10		ug/L			03/21/13 19:23	1
Acetone	ND		50		ug/L			03/21/13 19:23	1
Benzene	ND		1.0		ug/L			03/21/13 19:23	1
Bromobenzene	ND		1.0		ug/L			03/21/13 19:23	1
Bromoform	ND		1.0		ug/L			03/21/13 19:23	1
Bromomethane	ND		2.0		ug/L			03/21/13 19:23	1
Carbon disulfide	ND		10		ug/L			03/21/13 19:23	1
Carbon tetrachloride	ND		1.0		ug/L			03/21/13 19:23	1
Chlorobenzene	ND		1.0		ug/L			03/21/13 19:23	1
Chlorobromomethane	ND		1.0		ug/L			03/21/13 19:23	1
Chlorodibromomethane	ND		0.50		ug/L			03/21/13 19:23	1
Chloroethane	ND		2.0		ug/L			03/21/13 19:23	1
Chloroform	ND		1.0		ug/L			03/21/13 19:23	1
Chloromethane	ND		2.0		ug/L			03/21/13 19:23	1
cis-1,2-Dichloroethene	**16**		1.0		ug/L			03/21/13 19:23	1
cis-1,3-Dichloropropene	ND		0.40		ug/L			03/21/13 19:23	1
Dichlorobromomethane	ND		0.50		ug/L			03/21/13 19:23	1
Dichlorodifluoromethane	ND		1.0		ug/L			03/21/13 19:23	1
Ethyl ether	ND		1.0		ug/L			03/21/13 19:23	1
Ethylbenzene	ND		1.0		ug/L			03/21/13 19:23	1
Ethylene Dibromide	ND		1.0		ug/L			03/21/13 19:23	1
Hexachlorobutadiene	ND		0.40		ug/L			03/21/13 19:23	1
Isopropyl ether	ND		10		ug/L			03/21/13 19:23	1
Isopropylbenzene	ND		1.0		ug/L			03/21/13 19:23	1
Methyl tert-butyl ether	ND		1.0		ug/L			03/21/13 19:23	1

Client Sample ID: MW1034-20130320-01

Lab Sample ID: 480-34733-11

Date Collected: 03/20/13 11:15

Matrix: Water

Date Received: 03/21/13 07:24

Method: 8260C - Volatile Organic Compounds (GC/MS) (Continued)

Analyte	Result	Qualifier	RL	MDL	Unit	D	Prepared	Analyzed	Dil Fac
Methylene Chloride	ND		1.0		ug/L			03/21/13 19:23	1
m-Xylene & p-Xylene	ND		2.0		ug/L			03/21/13 19:23	1
Naphthalene	ND		5.0		ug/L			03/21/13 19:23	1
n-Butylbenzene	ND		1.0		ug/L			03/21/13 19:23	1
N-Propylbenzene	ND		1.0		ug/L			03/21/13 19:23	1
o-Xylene	ND		1.0		ug/L			03/21/13 19:23	1
sec-Butylbenzene	ND		1.0		ug/L			03/21/13 19:23	1
Styrene	ND		1.0		ug/L			03/21/13 19:23	1
Tert-amyl methyl ether	ND		5.0		ug/L			03/21/13 19:23	1
Tert-butyl ethyl ether	ND		5.0		ug/L			03/21/13 19:23	1
tert-Butylbenzene	ND		1.0		ug/L			03/21/13 19:23	1
Tetrachloroethene	ND		1.0		ug/L			03/21/13 19:23	1
Tetrahydrofuran	ND		10		ug/L			03/21/13 19:23	1
Toluene	ND		1.0		ug/L			03/21/13 19:23	1
trans-1,2-Dichloroethene	ND		1.0		ug/L			03/21/13 19:23	1
trans-1,3-Dichloropropene	ND		0.40		ug/L			03/21/13 19:23	1
Trichloroethene	**39**		1.0		ug/L			03/21/13 19:23	1
Trichlorofluoromethane	ND		1.0		ug/L			03/21/13 19:23	1
Vinyl chloride	ND		0.50		ug/L			03/21/13 19:23	1
Dibromomethane	ND		1.0		ug/L			03/21/13 19:23	1

Surrogate	*%Recovery*	*Qualifier*	*Limits*	*Prepared*	*Analyzed*	*Dil Fac*
Toluene-d8 (Surr)	*101*		*70 - 130*		*03/21/13 19:23*	*1*
1,2-Dichloroethane-d4 (Surr)	*95*		*70 - 130*		*03/21/13 19:23*	*1*
4-Bromofluorobenzene (Surr)	*108*		*70 - 130*		*03/21/13 19:23*	*1*

Method: 522 MOD - 1,4 Dioxane (GC/MS SIM)

Analyte	Result	Qualifier	RL	MDL	Unit	D	Prepared	Analyzed	Dil Fac
1,4-Dioxane	**0.59**		0.20		ug/L		03/27/13 14:05	03/27/13 19:45	1

Surrogate	*%Recovery*	*Qualifier*	*Limits*	*Prepared*	*Analyzed*	*Dil Fac*
1,4-Dioxane-d8 (Surr)	*84*		*70 - 130*	*03/27/13 14:05*	*03/27/13 19:45*	*1*

Client Sample ID: DUP002-20130320-01

Lab Sample ID: 480-34733-12

Date Collected: 03/20/13 11:11

Matrix: Water

Date Received: 03/21/13 07:24

Method: 8260C - Volatile Organic Compounds (GC/MS)

Analyte	Result	Qualifier	RL	MDL	Unit	D	Prepared	Analyzed	Dil Fac
1,1,1,2-Tetrachloroethane	ND		1.0		ug/L			03/21/13 19:49	1
1,1,1-Trichloroethane	ND		1.0		ug/L			03/21/13 19:49	1
1,1,2,2-Tetrachloroethane	ND		0.50		ug/L			03/21/13 19:49	1
1,1,2-Trichloroethane	ND		1.0		ug/L			03/21/13 19:49	1
1,1-Dichloroethane	ND		1.0		ug/L			03/21/13 19:49	1
1,1-Dichloroethene	**1.4**		1.0		ug/L			03/21/13 19:49	1
1,1-Dichloropropene	ND		1.0		ug/L			03/21/13 19:49	1
1,2,3-Trichlorobenzene	ND		1.0		ug/L			03/21/13 19:49	1
1,2,3-Trichloropropane	ND		1.0		ug/L			03/21/13 19:49	1
1,2,4-Trichlorobenzene	ND		1.0		ug/L			03/21/13 19:49	1
1,2,4-Trimethylbenzene	ND		1.0		ug/L			03/21/13 19:49	1

Client Sample ID: DUP002-20130320-01
Date Collected: 03/20/13 11:11
Date Received: 03/21/13 07:24

Lab Sample ID: 480-34733-12
Matrix: Water

Method: 8260C - Volatile Organic Compounds (GC/MS) (Continued)

Analyte	Result	Qualifier	RL	MDL	Unit	D	Prepared	Analyzed	Dil Fac
1,2-Dibromo-3-Chloropropane	ND		5.0		ug/L			03/21/13 19:49	1
1,2-Dichlorobenzene	ND		1.0		ug/L			03/21/13 19:49	1
1,2-Dichloroethane	ND		1.0		ug/L			03/21/13 19:49	1
1,2-Dichloropropane	ND		1.0		ug/L			03/21/13 19:49	1
1,3,5-Trimethylbenzene	ND		1.0		ug/L			03/21/13 19:49	1
1,3-Dichlorobenzene	ND		1.0		ug/L			03/21/13 19:49	1
1,3-Dichloropropane	ND		1.0		ug/L			03/21/13 19:49	1
1,4-Dichlorobenzene	ND		1.0		ug/L			03/21/13 19:49	1
1,4-Dioxane	ND		50		ug/L			03/21/13 19:49	1
2,2-Dichloropropane	ND		1.0		ug/L			03/21/13 19:49	1
2-Butanone (MEK)	ND		10		ug/L			03/21/13 19:49	1
2-Chlorotoluene	ND		1.0		ug/L			03/21/13 19:49	1
2-Hexanone	ND		10		ug/L			03/21/13 19:49	1
4-Chlorotoluene	ND		1.0		ug/L			03/21/13 19:49	1
4-Isopropyltoluene	ND		1.0		ug/L			03/21/13 19:49	1
4-Methyl-2-pentanone (MIBK)	ND		10		ug/L			03/21/13 19:49	1
Acetone	ND		50		ug/L			03/21/13 19:49	1
Benzene	ND		1.0		ug/L			03/21/13 19:49	1
Bromobenzene	ND		1.0		ug/L			03/21/13 19:49	1
Bromoform	ND		1.0		ug/L			03/21/13 19:49	1
Bromomethane	ND		2.0		ug/L			03/21/13 19:49	1
Carbon disulfide	ND		10		ug/L			03/21/13 19:49	1
Carbon tetrachloride	ND		1.0		ug/L			03/21/13 19:49	1
Chlorobenzene	ND		1.0		ug/L			03/21/13 19:49	1
Chlorobromomethane	ND		1.0		ug/L			03/21/13 19:49	1
Chlorodibromomethane	ND		0.50		ug/L			03/21/13 19:49	1
Chloroethane	ND		2.0		ug/L			03/21/13 19:49	1
Chloroform	ND		1.0		ug/L			03/21/13 19:49	1
Chloromethane	ND		2.0		ug/L			03/21/13 19:49	1
cis-1,2-Dichloroethene	**1.8**		1.0		ug/L			03/21/13 19:49	1
cis-1,3-Dichloropropene	ND		0.40		ug/L			03/21/13 19:49	1
Dichlorobromomethane	ND		0.50		ug/L			03/21/13 19:49	1
Dichlorodifluoromethane	ND		1.0		ug/L			03/21/13 19:49	1
Ethyl ether	ND		1.0		ug/L			03/21/13 19:49	1
Ethylbenzene	ND		1.0		ug/L			03/21/13 19:49	1
Ethylene Dibromide	ND		1.0		ug/L			03/21/13 19:49	1
Hexachlorobutadiene	ND		0.40		ug/L			03/21/13 19:49	1
Isopropyl ether	ND		10		ug/L			03/21/13 19:49	1
Isopropylbenzene	ND		1.0		ug/L			03/21/13 19:49	1
Methyl tert-butyl ether	ND		1.0		ug/L			03/21/13 19:49	1
Methylene Chloride	ND		1.0		ug/L			03/21/13 19:49	1
m-Xylene & p-Xylene	ND		2.0		ug/L			03/21/13 19:49	1
Naphthalene	ND		5.0		ug/L			03/21/13 19:49	1
n-Butylbenzene	ND		1.0		ug/L			03/21/13 19:49	1
N-Propylbenzene	ND		1.0		ug/L			03/21/13 19:49	1
o-Xylene	ND		1.0		ug/L			03/21/13 19:49	1
sec-Butylbenzene	ND		1.0		ug/L			03/21/13 19:49	1
Styrene	ND		1.0		ug/L			03/21/13 19:49	1
Tert-amyl methyl ether	ND		5.0		ug/L			03/21/13 19:49	1

Client Sample ID: DUP002-20130320-01

Lab Sample ID: 480-34733-12

Date Collected: 03/20/13 11:11

Matrix: Water

Date Received: 03/21/13 07:24

Method: 8260C - Volatile Organic Compounds (GC/MS) (Continued)

Analyte	Result	Qualifier	RL	MDL	Unit	D	Prepared	Analyzed	Dil Fac
Tert-butyl ethyl ether	ND		5.0		ug/L			03/21/13 19:49	1
tert-Butylbenzene	ND		1.0		ug/L			03/21/13 19:49	1
Tetrachloroethene	ND		1.0		ug/L			03/21/13 19:49	1
Tetrahydrofuran	ND		10		ug/L			03/21/13 19:49	1
Toluene	ND		1.0		ug/L			03/21/13 19:49	1
trans-1,2-Dichloroethene	ND		1.0		ug/L			03/21/13 19:49	1
trans-1,3-Dichloropropene	ND		0.40		ug/L			03/21/13 19:49	1
Trichloroethene	**13**		1.0		ug/L			03/21/13 19:49	1
Trichlorofluoromethane	ND		1.0		ug/L			03/21/13 19:49	1
Vinyl chloride	ND		0.50		ug/L			03/21/13 19:49	1
Dibromomethane	ND		1.0		ug/L			03/21/13 19:49	1

Surrogate	*%Recovery*	*Qualifier*	*Limits*	*Prepared*	*Analyzed*	*Dil Fac*
Toluene-d8 (Surr)	*98*		*70 - 130*		*03/21/13 19:49*	*1*
1,2-Dichloroethane-d4 (Surr)	*95*		*70 - 130*		*03/21/13 19:49*	*1*
4-Bromofluorobenzene (Surr)	*106*		*70 - 130*		*03/21/13 19:49*	*1*

Client Sample ID: MW1028-20130320-01

Lab Sample ID: 480-34733-13

Date Collected: 03/20/13 14:00

Matrix: Water

Date Received: 03/21/13 07:24

Method: 8260C - Volatile Organic Compounds (GC/MS)

Analyte	Result	Qualifier	RL	MDL	Unit	D	Prepared	Analyzed	Dil Fac
1,1,1,2-Tetrachloroethane	ND		1.0		ug/L			03/21/13 20:14	1
1,1,1-Trichloroethane	ND		1.0		ug/L			03/21/13 20:14	1
1,1,2,2-Tetrachloroethane	ND		0.50		ug/L			03/21/13 20:14	1
1,1,2-Trichloroethane	ND		1.0		ug/L			03/21/13 20:14	1
1,1-Dichloroethane	ND		1.0		ug/L			03/21/13 20:14	1
1,1-Dichloroethene	ND		1.0		ug/L			03/21/13 20:14	1
1,1-Dichloropropene	ND		1.0		ug/L			03/21/13 20:14	1
1,2,3-Trichlorobenzene	ND		1.0		ug/L			03/21/13 20:14	1
1,2,3-Trichloropropane	ND		1.0		ug/L			03/21/13 20:14	1
1,2,4-Trichlorobenzene	ND		1.0		ug/L			03/21/13 20:14	1
1,2,4-Trimethylbenzene	ND		1.0		ug/L			03/21/13 20:14	1
1,2-Dibromo-3-Chloropropane	ND		5.0		ug/L			03/21/13 20:14	1
1,2-Dichlorobenzene	ND		1.0		ug/L			03/21/13 20:14	1
1,2-Dichloroethane	ND		1.0		ug/L			03/21/13 20:14	1
1,2-Dichloropropane	ND		1.0		ug/L			03/21/13 20:14	1
1,3,5-Trimethylbenzene	ND		1.0		ug/L			03/21/13 20:14	1
1,3-Dichlorobenzene	ND		1.0		ug/L			03/21/13 20:14	1
1,3-Dichloropropane	ND		1.0		ug/L			03/21/13 20:14	1
1,4-Dichlorobenzene	ND		1.0		ug/L			03/21/13 20:14	1
1,4-Dioxane	ND		50		ug/L			03/21/13 20:14	1
2,2-Dichloropropane	ND		1.0		ug/L			03/21/13 20:14	1
2-Butanone (MEK)	ND		10		ug/L			03/21/13 20:14	1
2-Chlorotoluene	ND		1.0		ug/L			03/21/13 20:14	1
2-Hexanone	ND		10		ug/L			03/21/13 20:14	1
4-Chlorotoluene	ND		1.0		ug/L			03/21/13 20:14	1
4-Isopropyltoluene	ND		1.0		ug/L			03/21/13 20:14	1
4-Methyl-2-pentanone (MIBK)	ND		10		ug/L			03/21/13 20:14	1

Client: ERM-Northeast
Project/Site: IDS Wayland

TestAmerica Job ID: 480-34733-1

Client Sample ID: MW1028-20130320-01
Date Collected: 03/20/13 14:00
Date Received: 03/21/13 07:24

Lab Sample ID: 480-34733-13
Matrix: Water

Method: 8260C - Volatile Organic Compounds (GC/MS) (Continued)

Analyte	Result	Qualifier	RL	MDL	Unit	D	Prepared	Analyzed	Dil Fac
Acetone	ND		50		ug/L			03/21/13 20:14	1
Benzene	ND		1.0		ug/L			03/21/13 20:14	1
Bromobenzene	ND		1.0		ug/L			03/21/13 20:14	1
Bromoform	ND		1.0		ug/L			03/21/13 20:14	1
Bromomethane	ND		2.0		ug/L			03/21/13 20:14	1
Carbon disulfide	ND		10		ug/L			03/21/13 20:14	1
Carbon tetrachloride	ND		1.0		ug/L			03/21/13 20:14	1
Chlorobenzene	ND		1.0		ug/L			03/21/13 20:14	1
Chlorobromomethane	ND		1.0		ug/L			03/21/13 20:14	1
Chlorodibromomethane	ND		0.50		ug/L			03/21/13 20:14	1
Chloroethane	ND		2.0		ug/L			03/21/13 20:14	1
Chloroform	ND		1.0		ug/L			03/21/13 20:14	1
Chloromethane	ND		2.0		ug/L			03/21/13 20:14	1
cis-1,2-Dichloroethene	**1.6**		1.0		ug/L			03/21/13 20:14	1
cis-1,3-Dichloropropene	ND		0.40		ug/L			03/21/13 20:14	1
Dichlorobromomethane	ND		0.50		ug/L			03/21/13 20:14	1
Dichlorodifluoromethane	ND		1.0		ug/L			03/21/13 20:14	1
Ethyl ether	ND		1.0		ug/L			03/21/13 20:14	1
Ethylbenzene	ND		1.0		ug/L			03/21/13 20:14	1
Ethylene Dibromide	ND		1.0		ug/L			03/21/13 20:14	1
Hexachlorobutadiene	ND		0.40		ug/L			03/21/13 20:14	1
Isopropyl ether	ND		10		ug/L			03/21/13 20:14	1
Isopropylbenzene	ND		1.0		ug/L			03/21/13 20:14	1
Methyl tert-butyl ether	ND		1.0		ug/L			03/21/13 20:14	1
Methylene Chloride	ND		1.0		ug/L			03/21/13 20:14	1
m-Xylene & p-Xylene	ND		2.0		ug/L			03/21/13 20:14	1
Naphthalene	ND		5.0		ug/L			03/21/13 20:14	1
n-Butylbenzene	ND		1.0		ug/L			03/21/13 20:14	1
N-Propylbenzene	ND		1.0		ug/L			03/21/13 20:14	1
o-Xylene	ND		1.0		ug/L			03/21/13 20:14	1
sec-Butylbenzene	ND		1.0		ug/L			03/21/13 20:14	1
Styrene	ND		1.0		ug/L			03/21/13 20:14	1
Tert-amyl methyl ether	ND		5.0		ug/L			03/21/13 20:14	1
Tert-butyl ethyl ether	ND		5.0		ug/L			03/21/13 20:14	1
tert-Butylbenzene	ND		1.0		ug/L			03/21/13 20:14	1
Tetrachloroethene	ND		1.0		ug/L			03/21/13 20:14	1
Tetrahydrofuran	ND		10		ug/L			03/21/13 20:14	1
Toluene	ND		1.0		ug/L			03/21/13 20:14	1
trans-1,2-Dichloroethene	ND		1.0		ug/L			03/21/13 20:14	1
trans-1,3-Dichloropropene	ND		0.40		ug/L			03/21/13 20:14	1
Trichloroethene	**6.8**		1.0		ug/L			03/21/13 20:14	1
Trichlorofluoromethane	ND		1.0		ug/L			03/21/13 20:14	1
Vinyl chloride	ND		0.50		ug/L			03/21/13 20:14	1
Dibromomethane	ND		1.0		ug/L			03/21/13 20:14	1

Surrogate	*%Recovery*	*Qualifier*	*Limits*	*Prepared*	*Analyzed*	*Dil Fac*
Toluene-d8 (Surr)	*99*		*70 - 130*		*03/21/13 20:14*	*1*
1,2-Dichloroethane-d4 (Surr)	*94*		*70 - 130*		*03/21/13 20:14*	*1*
4-Bromofluorobenzene (Surr)	*107*		*70 - 130*		*03/21/13 20:14*	*1*

Client: ERM-Northeast
Project/Site: IDS Wayland

TestAmerica Job ID: 480-34733-1

Client Sample ID: MW1027-20130320-01
Date Collected: 03/20/13 15:05
Date Received: 03/21/13 07:24

Lab Sample ID: 480-34733-14
Matrix: Water

Method: 8260C - Volatile Organic Compounds (GC/MS)

Analyte	Result	Qualifier	RL	MDL	Unit	D	Prepared	Analyzed	Dil Fac
1,1,1,2-Tetrachloroethane	ND		1.0		ug/L			03/22/13 03:00	1
1,1,1-Trichloroethane	ND		1.0		ug/L			03/22/13 03:00	1
1,1,2,2-Tetrachloroethane	ND		0.50		ug/L			03/22/13 03:00	1
1,1,2-Trichloroethane	ND		1.0		ug/L			03/22/13 03:00	1
1,1-Dichloroethane	ND		1.0		ug/L			03/22/13 03:00	1
1,1-Dichloroethene	ND		1.0		ug/L			03/22/13 03:00	1
1,1-Dichloropropene	ND		1.0		ug/L			03/22/13 03:00	1
1,2,3-Trichlorobenzene	ND		1.0		ug/L			03/22/13 03:00	1
1,2,3-Trichloropropane	ND		1.0		ug/L			03/22/13 03:00	1
1,2,4-Trichlorobenzene	ND		1.0		ug/L			03/22/13 03:00	1
1,2,4-Trimethylbenzene	ND		1.0		ug/L			03/22/13 03:00	1
1,2-Dibromo-3-Chloropropane	ND		5.0		ug/L			03/22/13 03:00	1
1,2-Dichlorobenzene	ND		1.0		ug/L			03/22/13 03:00	1
1,2-Dichloroethane	ND		1.0		ug/L			03/22/13 03:00	1
1,2-Dichloropropane	ND		1.0		ug/L			03/22/13 03:00	1
1,3,5-Trimethylbenzene	ND		1.0		ug/L			03/22/13 03:00	1
1,3-Dichlorobenzene	ND		1.0		ug/L			03/22/13 03:00	1
1,3-Dichloropropane	ND		1.0		ug/L			03/22/13 03:00	1
1,4-Dichlorobenzene	ND		1.0		ug/L			03/22/13 03:00	1
1,4-Dioxane	ND		50		ug/L			03/22/13 03:00	1
2,2-Dichloropropane	ND		1.0		ug/L			03/22/13 03:00	1
2-Butanone (MEK)	ND	*	10		ug/L			03/22/13 03:00	1
2-Chlorotoluene	ND		1.0		ug/L			03/22/13 03:00	1
2-Hexanone	ND		10		ug/L			03/22/13 03:00	1
4-Chlorotoluene	ND		1.0		ug/L			03/22/13 03:00	1
4-Isopropyltoluene	ND		1.0		ug/L			03/22/13 03:00	1
4-Methyl-2-pentanone (MIBK)	ND		10		ug/L			03/22/13 03:00	1
Acetone	ND		50		ug/L			03/22/13 03:00	1
Benzene	ND		1.0		ug/L			03/22/13 03:00	1
Bromobenzene	ND		1.0		ug/L			03/22/13 03:00	1
Bromoform	ND		1.0		ug/L			03/22/13 03:00	1
Bromomethane	ND		2.0		ug/L			03/22/13 03:00	1
Carbon disulfide	ND		10		ug/L			03/22/13 03:00	1
Carbon tetrachloride	ND		1.0		ug/L			03/22/13 03:00	1
Chlorobenzene	ND		1.0		ug/L			03/22/13 03:00	1
Chlorobromomethane	ND		1.0		ug/L			03/22/13 03:00	1
Chlorodibromomethane	ND		0.50		ug/L			03/22/13 03:00	1
Chloroethane	ND		2.0		ug/L			03/22/13 03:00	1
Chloroform	ND		1.0		ug/L			03/22/13 03:00	1
Chloromethane	ND		2.0		ug/L			03/22/13 03:00	1
cis-1,2-Dichloroethene	ND		1.0		ug/L			03/22/13 03:00	1
cis-1,3-Dichloropropene	ND		0.40		ug/L			03/22/13 03:00	1
Dichlorobromomethane	ND		0.50		ug/L			03/22/13 03:00	1
Dichlorodifluoromethane	ND		1.0		ug/L			03/22/13 03:00	1
Ethyl ether	ND		1.0		ug/L			03/22/13 03:00	1
Ethylbenzene	ND		1.0		ug/L			03/22/13 03:00	1
Ethylene Dibromide	ND		1.0		ug/L			03/22/13 03:00	1
Hexachlorobutadiene	ND		0.40		ug/L			03/22/13 03:00	1
Isopropyl ether	ND		10		ug/L			03/22/13 03:00	1

Client Sample ID: MW1027-20130320-01

Lab Sample ID: 480-34733-14

Date Collected: 03/20/13 15:05

Matrix: Water

Date Received: 03/21/13 07:24

Method: 8260C - Volatile Organic Compounds (GC/MS) (Continued)

Analyte	Result	Qualifier	RL	MDL	Unit	D	Prepared	Analyzed	Dil Fac
Isopropylbenzene	ND		1.0		ug/L			03/22/13 03:00	1
Methyl tert-butyl ether	ND		1.0		ug/L			03/22/13 03:00	1
Methylene Chloride	ND		1.0		ug/L			03/22/13 03:00	1
m-Xylene & p-Xylene	ND		2.0		ug/L			03/22/13 03:00	1
Naphthalene	ND		5.0		ug/L			03/22/13 03:00	1
n-Butylbenzene	ND		1.0		ug/L			03/22/13 03:00	1
N-Propylbenzene	ND		1.0		ug/L			03/22/13 03:00	1
o-Xylene	ND		1.0		ug/L			03/22/13 03:00	1
sec-Butylbenzene	ND		1.0		ug/L			03/22/13 03:00	1
Styrene	ND		1.0		ug/L			03/22/13 03:00	1
Tert-amyl methyl ether	ND		5.0		ug/L			03/22/13 03:00	1
Tert-butyl ethyl ether	ND		5.0		ug/L			03/22/13 03:00	1
tert-Butylbenzene	ND		1.0		ug/L			03/22/13 03:00	1
Tetrachloroethene	ND		1.0		ug/L			03/22/13 03:00	1
Tetrahydrofuran	ND		10		ug/L			03/22/13 03:00	1
Toluene	ND		1.0		ug/L			03/22/13 03:00	1
trans-1,2-Dichloroethene	ND		1.0		ug/L			03/22/13 03:00	1
trans-1,3-Dichloropropene	ND		0.40		ug/L			03/22/13 03:00	1
Trichloroethene	ND		1.0		ug/L			03/22/13 03:00	1
Trichlorofluoromethane	ND		1.0		ug/L			03/22/13 03:00	1
Vinyl chloride	ND		0.50		ug/L			03/22/13 03:00	1
Dibromomethane	ND		1.0		ug/L			03/22/13 03:00	1

Surrogate	*%Recovery*	*Qualifier*	*Limits*	*Prepared*	*Analyzed*	*Dil Fac*
Toluene-d8 (Surr)	*97*		*70 - 130*		*03/22/13 03:00*	*1*
1,2-Dichloroethane-d4 (Surr)	*94*		*70 - 130*		*03/22/13 03:00*	*1*
4-Bromofluorobenzene (Surr)	*100*		*70 - 130*		*03/22/13 03:00*	*1*

Client Sample ID: TB001-20130320-01

Lab Sample ID: 480-34733-15

Date Collected: 03/20/13 13:13

Matrix: Water

Date Received: 03/21/13 07:24

Method: 8260C - Volatile Organic Compounds (GC/MS)

Analyte	Result	Qualifier	RL	MDL	Unit	D	Prepared	Analyzed	Dil Fac
1,1,1,2-Tetrachloroethane	ND		1.0		ug/L			03/22/13 03:23	1
1,1,1-Trichloroethane	ND		1.0		ug/L			03/22/13 03:23	1
1,1,2,2-Tetrachloroethane	ND		0.50		ug/L			03/22/13 03:23	1
1,1,2-Trichloroethane	ND		1.0		ug/L			03/22/13 03:23	1
1,1-Dichloroethane	ND		1.0		ug/L			03/22/13 03:23	1
1,1-Dichloroethene	ND		1.0		ug/L			03/22/13 03:23	1
1,1-Dichloropropene	ND		1.0		ug/L			03/22/13 03:23	1
1,2,3-Trichlorobenzene	ND		1.0		ug/L			03/22/13 03:23	1
1,2,3-Trichloropropane	ND		1.0		ug/L			03/22/13 03:23	1
1,2,4-Trichlorobenzene	ND		1.0		ug/L			03/22/13 03:23	1
1,2,4-Trimethylbenzene	ND		1.0		ug/L			03/22/13 03:23	1
1,2-Dibromo-3-Chloropropane	ND		5.0		ug/L			03/22/13 03:23	1
1,2-Dichlorobenzene	ND		1.0		ug/L			03/22/13 03:23	1
1,2-Dichloroethane	ND		1.0		ug/L			03/22/13 03:23	1
1,2-Dichloropropane	ND		1.0		ug/L			03/22/13 03:23	1
1,3,5-Trimethylbenzene	ND		1.0		ug/L			03/22/13 03:23	1

Client: ERM-Northeast
Project/Site: IDS Wayland

TestAmerica Job ID: 480-34733-1

Client Sample ID: TB001-20130320-01
Date Collected: 03/20/13 13:13
Date Received: 03/21/13 07:24

Lab Sample ID: 480-34733-15
Matrix: Water

Method: 8260C - Volatile Organic Compounds (GC/MS) (Continued)

Analyte	Result	Qualifier	RL	MDL	Unit	D	Prepared	Analyzed	Dil Fac
1,3-Dichlorobenzene	ND		1.0		ug/L			03/22/13 03:23	1
1,3-Dichloropropane	ND		1.0		ug/L			03/22/13 03:23	1
1,4-Dichlorobenzene	ND		1.0		ug/L			03/22/13 03:23	1
1,4-Dioxane	ND		50		ug/L			03/22/13 03:23	1
2,2-Dichloropropane	ND		1.0		ug/L			03/22/13 03:23	1
2-Butanone (MEK)	ND	*	10		ug/L			03/22/13 03:23	1
2-Chlorotoluene	ND		1.0		ug/L			03/22/13 03:23	1
2-Hexanone	ND		10		ug/L			03/22/13 03:23	1
4-Chlorotoluene	ND		1.0		ug/L			03/22/13 03:23	1
4-Isopropyltoluene	ND		1.0		ug/L			03/22/13 03:23	1
4-Methyl-2-pentanone (MIBK)	ND		10		ug/L			03/22/13 03:23	1
Acetone	ND		50		ug/L			03/22/13 03:23	1
Benzene	ND		1.0		ug/L			03/22/13 03:23	1
Bromobenzene	ND		1.0		ug/L			03/22/13 03:23	1
Bromoform	ND		1.0		ug/L			03/22/13 03:23	1
Bromomethane	ND		2.0		ug/L			03/22/13 03:23	1
Carbon disulfide	ND		10		ug/L			03/22/13 03:23	1
Carbon tetrachloride	ND		1.0		ug/L			03/22/13 03:23	1
Chlorobenzene	ND		1.0		ug/L			03/22/13 03:23	1
Chlorobromomethane	ND		1.0		ug/L			03/22/13 03:23	1
Chlorodibromomethane	ND		0.50		ug/L			03/22/13 03:23	1
Chloroethane	ND		2.0		ug/L			03/22/13 03:23	1
Chloroform	ND		1.0		ug/L			03/22/13 03:23	1
Chloromethane	ND		2.0		ug/L			03/22/13 03:23	1
cis-1,2-Dichloroethene	ND		1.0		ug/L			03/22/13 03:23	1
cis-1,3-Dichloropropene	ND		0.40		ug/L			03/22/13 03:23	1
Dichlorobromomethane	ND		0.50		ug/L			03/22/13 03:23	1
Dichlorodifluoromethane	ND		1.0		ug/L			03/22/13 03:23	1
Ethyl ether	ND		1.0		ug/L			03/22/13 03:23	1
Ethylbenzene	ND		1.0		ug/L			03/22/13 03:23	1
Ethylene Dibromide	ND		1.0		ug/L			03/22/13 03:23	1
Hexachlorobutadiene	ND		0.40		ug/L			03/22/13 03:23	1
Isopropyl ether	ND		10		ug/L			03/22/13 03:23	1
Isopropylbenzene	ND		1.0		ug/L			03/22/13 03:23	1
Methyl tert-butyl ether	ND		1.0		ug/L			03/22/13 03:23	1
Methylene Chloride	ND		1.0		ug/L			03/22/13 03:23	1
m-Xylene & p-Xylene	ND		2.0		ug/L			03/22/13 03:23	1
Naphthalene	ND		5.0		ug/L			03/22/13 03:23	1
n-Butylbenzene	ND		1.0		ug/L			03/22/13 03:23	1
N-Propylbenzene	ND		1.0		ug/L			03/22/13 03:23	1
o-Xylene	ND		1.0		ug/L			03/22/13 03:23	1
sec-Butylbenzene	ND		1.0		ug/L			03/22/13 03:23	1
Styrene	ND		1.0		ug/L			03/22/13 03:23	1
Tert-amyl methyl ether	ND		5.0		ug/L			03/22/13 03:23	1
Tert-butyl ethyl ether	ND		5.0		ug/L			03/22/13 03:23	1
tert-Butylbenzene	ND		1.0		ug/L			03/22/13 03:23	1
Tetrachloroethene	ND		1.0		ug/L			03/22/13 03:23	1
Tetrahydrofuran	ND		10		ug/L			03/22/13 03:23	1
Toluene	ND		1.0		ug/L			03/22/13 03:23	1

Client: ERM-Northeast
Project/Site: IDS Wayland

TestAmerica Job ID: 480-34733-1

Client Sample ID: TB001-20130320-01
Date Collected: 03/20/13 13:13
Date Received: 03/21/13 07:24

Lab Sample ID: 480-34733-15
Matrix: Water

Method: 8260C - Volatile Organic Compounds (GC/MS) (Continued)

Analyte	Result	Qualifier	RL	MDL	Unit	D	Prepared	Analyzed	Dil Fac
trans-1,2-Dichloroethene	ND		1.0		ug/L			03/22/13 03:23	1
trans-1,3-Dichloropropene	ND		0.40		ug/L			03/22/13 03:23	1
Trichloroethene	ND		1.0		ug/L			03/22/13 03:23	1
Trichlorofluoromethane	ND		1.0		ug/L			03/22/13 03:23	1
Vinyl chloride	ND		0.50		ug/L			03/22/13 03:23	1
Dibromomethane	ND		1.0		ug/L			03/22/13 03:23	1

Surrogate	*%Recovery*	*Qualifier*	*Limits*	*Prepared*	*Analyzed*	*Dil Fac*
Toluene-d8 (Surr)	*95*		*70 - 130*		*03/22/13 03:23*	*1*
1,2-Dichloroethane-d4 (Surr)	*96*		*70 - 130*		*03/22/13 03:23*	*1*
4-Bromofluorobenzene (Surr)	*98*		*70 - 130*		*03/22/13 03:23*	*1*

Surrogate Summary

Client: ERM-Northeast
Project/Site: IDS Wayland

TestAmerica Job ID: 480-34733-1

Method: 8260B SIM - Volatile Organic Compounds (GC/MS)

Matrix: Water **Prep Type: Total/NA**

		Percent Surrogate Recovery (Acceptance Limits)							
Lab Sample ID	Client Sample ID	BA-d9 (Sur (50-150)	DBFM (50-150)						
480-34733-6	MW1025M-20130320-01	106	88						
480-34733-7	MW1022-20130320-01	113	91						
480-34733-8	MW1023-20130320-01	96	89						
480-34733-10	MW1033-20130320-01	110	92						
480-34733-11	MW1034-20130320-01	99	89						
LCS 480-108998/3	Lab Control Sample	105	88						
LCSD 480-108998/4	Lab Control Sample Dup	108	88						
MB 480-108998/5	Method Blank	114	88						

Surrogate Legend

TBA-d9 (Surr) = TBA-d9 (Surr)

DBFM = Dibromofluoromethane (Surr)

Method: 8260C - Volatile Organic Compounds (GC/MS)

Matrix: Water **Prep Type: Total/NA**

		Percent Surrogate Recovery (Acceptance Limits)							
Lab Sample ID	Client Sample ID	TOL (70-130)	12DCE (70-130)	BFB (70-130)					
480-34733-1	MW1010M-20130320-01	97	96	102					
480-34733-2	MW1010D-20130320-01	98	96	102					
480-34733-3	MW1006-20130320-01	98	98	100					
480-34733-4	MW1030-20130320-01	96	98	99					
480-34733-5	MW1015D-20130320-01	98	98	103					
480-34733-6	MW1025M-20130320-01	97	95	101					
480-34733-6 - DL	MW1025M-20130320-01	96	96	100					
480-34733-7	MW1022-20130320-01	99	93	105					
480-34733-8	MW1023-20130320-01	98	93	106					
480-34733-9	DUP003-20130320-01	98	93	107					
480-34733-10	MW1033-20130320-01	100	95	107					
480-34733-11	MW1034-20130320-01	101	95	108					
480-34733-12	DUP002-20130320-01	98	95	106					
480-34733-13	MW1028-20130320-01	99	94	107					
480-34733-14	MW1027-20130320-01	97	94	100					
480-34733-15	TB001-20130320-01	95	96	98					
LCS 480-108441/4	Lab Control Sample	97	95	104					
LCS 480-108444/4	Lab Control Sample	99	97	104					
LCS 480-108596/4	Lab Control Sample	97	94	102					
LCSD 480-108441/5	Lab Control Sample Dup	98	95	103					
LCSD 480-108444/5	Lab Control Sample Dup	99	97	103					
LCSD 480-108596/5	Lab Control Sample Dup	98	94	102					
MB 480-108441/7	Method Blank	98	94	104					
MB 480-108444/7	Method Blank	96	96	100					
MB 480-108596/7	Method Blank	97	95	101					

Surrogate Legend

TOL = Toluene-d8 (Surr)

12DCE = 1,2-Dichloroethane-d4 (Surr)

BFB = 4-Bromofluorobenzene (Surr)

Surrogate Summary

Client: ERM-Northeast
Project/Site: IDS Wayland

TestAmerica Job ID: 480-34733-1

Method: 522 MOD - 1,4 Dioxane (GC/MS SIM)

Matrix: Water **Prep Type: Total/NA**

		Percent Surrogate Recovery (Acceptance Limits)							
		14DD8							
Lab Sample ID	**Client Sample ID**	**(70-130)**							
480-34733-7	MW1022-20130320-01	88							
480-34733-8	MW1023-20130320-01	85							
480-34733-10	MW1033-20130320-01	78							
480-34733-11	MW1034-20130320-01	84							
LCS 200-53504/2-A	Lab Control Sample	84							
MB 200-53504/1-A	Method Blank	79							

Surrogate Legend

14DD8 = 1,4-Dioxane-d8 (Surr)

Method: 8260B SIM - Volatile Organic Compounds (GC/MS)

Lab Sample ID: MB 480-108998/5 — **Client Sample ID: Method Blank**
Matrix: Water — **Prep Type: Total/NA**
Analysis Batch: 108998

Analyte	MB Result	MB Qualifier	RL	MDL	Unit	D	Prepared	Analyzed	Dil Fac
1,4-Dioxane	ND		1.6		ug/L			03/25/13 12:48	1

Surrogate	*MB %Recovery*	*MB Qualifier*	*Limits*	*Prepared*	*Analyzed*	*Dil Fac*
TBA-d9 (Surr)	*114*		*50 - 150*		*03/25/13 12:48*	*1*
Dibromofluoromethane (Surr)	*88*		*50 - 150*		*03/25/13 12:48*	*1*

Lab Sample ID: LCS 480-108998/3 — **Client Sample ID: Lab Control Sample**
Matrix: Water — **Prep Type: Total/NA**
Analysis Batch: 108998

Analyte			Spike Added	LCS Result	LCS Qualifier	Unit	D	%Rec	%Rec. Limits		
1,4-Dioxane			16.0	16.2		ug/L		101			

Surrogate	*LCS %Recovery*	*LCS Qualifier*	*Limits*
TBA-d9 (Surr)	*105*		*50 - 150*
Dibromofluoromethane (Surr)	*88*		*50 - 150*

Lab Sample ID: LCSD 480-108998/4 — **Client Sample ID: Lab Control Sample Dup**
Matrix: Water — **Prep Type: Total/NA**
Analysis Batch: 108998

Analyte			Spike Added	LCSD Result	LCSD Qualifier	Unit	D	%Rec	%Rec. Limits	RPD	RPD Limit
1,4-Dioxane			16.0	16.0		ug/L		100		2	

Surrogate	*LCSD %Recovery*	*LCSD Qualifier*	*Limits*
TBA-d9 (Surr)	*108*		*50 - 150*
Dibromofluoromethane (Surr)	*88*		*50 - 150*

Method: 8260C - Volatile Organic Compounds (GC/MS)

Lab Sample ID: MB 480-108441/7 — **Client Sample ID: Method Blank**
Matrix: Water — **Prep Type: Total/NA**
Analysis Batch: 108441

Analyte	MB Result	MB Qualifier	RL	MDL	Unit	D	Prepared	Analyzed	Dil Fac
1,1,1,2-Tetrachloroethane	ND		1.0		ug/L			03/21/13 11:20	1
1,1,1-Trichloroethane	ND		1.0		ug/L			03/21/13 11:20	1
1,1,2,2-Tetrachloroethane	ND		0.50		ug/L			03/21/13 11:20	1
1,1,2-Trichloroethane	ND		1.0		ug/L			03/21/13 11:20	1
1,1-Dichloroethane	ND		1.0		ug/L			03/21/13 11:20	1
1,1-Dichloroethene	ND		1.0		ug/L			03/21/13 11:20	1
1,1-Dichloropropene	ND		1.0		ug/L			03/21/13 11:20	1
1,2,3-Trichlorobenzene	ND		1.0		ug/L			03/21/13 11:20	1
1,2,3-Trichloropropane	ND		1.0		ug/L			03/21/13 11:20	1
1,2,4-Trichlorobenzene	ND		1.0		ug/L			03/21/13 11:20	1
1,2,4-Trimethylbenzene	ND		1.0		ug/L			03/21/13 11:20	1
1,2-Dibromo-3-Chloropropane	ND		5.0		ug/L			03/21/13 11:20	1

Method: 8260C - Volatile Organic Compounds (GC/MS) (Continued)

Lab Sample ID: MB 480-108441/7
Matrix: Water
Analysis Batch: 108441

Client Sample ID: Method Blank
Prep Type: Total/NA

Analyte	MB Result	MB Qualifier	RL	MDL	Unit	D	Prepared	Analyzed	Dil Fac
1,2-Dichlorobenzene	ND		1.0		ug/L			03/21/13 11:20	1
1,2-Dichloroethane	ND		1.0		ug/L			03/21/13 11:20	1
1,2-Dichloropropane	ND		1.0		ug/L			03/21/13 11:20	1
1,3,5-Trimethylbenzene	ND		1.0		ug/L			03/21/13 11:20	1
1,3-Dichlorobenzene	ND		1.0		ug/L			03/21/13 11:20	1
1,3-Dichloropropane	ND		1.0		ug/L			03/21/13 11:20	1
1,4-Dichlorobenzene	ND		1.0		ug/L			03/21/13 11:20	1
1,4-Dioxane	ND		50		ug/L			03/21/13 11:20	1
2,2-Dichloropropane	ND		1.0		ug/L			03/21/13 11:20	1
2-Butanone (MEK)	ND		10		ug/L			03/21/13 11:20	1
2-Chlorotoluene	ND		1.0		ug/L			03/21/13 11:20	1
2-Hexanone	ND		10		ug/L			03/21/13 11:20	1
4-Chlorotoluene	ND		1.0		ug/L			03/21/13 11:20	1
4-Isopropyltoluene	ND		1.0		ug/L			03/21/13 11:20	1
4-Methyl-2-pentanone (MIBK)	ND		10		ug/L			03/21/13 11:20	1
Acetone	ND		50		ug/L			03/21/13 11:20	1
Benzene	ND		1.0		ug/L			03/21/13 11:20	1
Bromobenzene	ND		1.0		ug/L			03/21/13 11:20	1
Bromoform	ND		1.0		ug/L			03/21/13 11:20	1
Bromomethane	ND		2.0		ug/L			03/21/13 11:20	1
Carbon disulfide	ND		10		ug/L			03/21/13 11:20	1
Carbon tetrachloride	ND		1.0		ug/L			03/21/13 11:20	1
Chlorobenzene	ND		1.0		ug/L			03/21/13 11:20	1
Chlorobromomethane	ND		1.0		ug/L			03/21/13 11:20	1
Chlorodibromomethane	ND		0.50		ug/L			03/21/13 11:20	1
Chloroethane	ND		2.0		ug/L			03/21/13 11:20	1
Chloroform	ND		1.0		ug/L			03/21/13 11:20	1
Chloromethane	ND		2.0		ug/L			03/21/13 11:20	1
cis-1,2-Dichloroethene	ND		1.0		ug/L			03/21/13 11:20	1
cis-1,3-Dichloropropene	ND		0.40		ug/L			03/21/13 11:20	1
Dichlorobromomethane	ND		0.50		ug/L			03/21/13 11:20	1
Dichlorodifluoromethane	ND		1.0		ug/L			03/21/13 11:20	1
Ethyl ether	ND		1.0		ug/L			03/21/13 11:20	1
Ethylbenzene	ND		1.0		ug/L			03/21/13 11:20	1
Ethylene Dibromide	ND		1.0		ug/L			03/21/13 11:20	1
Hexachlorobutadiene	ND		0.40		ug/L			03/21/13 11:20	1
Isopropyl ether	ND		10		ug/L			03/21/13 11:20	1
Isopropylbenzene	ND		1.0		ug/L			03/21/13 11:20	1
Methyl tert-butyl ether	ND		1.0		ug/L			03/21/13 11:20	1
Methylene Chloride	ND		1.0		ug/L			03/21/13 11:20	1
m-Xylene & p-Xylene	ND		2.0		ug/L			03/21/13 11:20	1
Naphthalene	ND		5.0		ug/L			03/21/13 11:20	1
n-Butylbenzene	ND		1.0		ug/L			03/21/13 11:20	1
N-Propylbenzene	ND		1.0		ug/L			03/21/13 11:20	1
o-Xylene	ND		1.0		ug/L			03/21/13 11:20	1
sec-Butylbenzene	ND		1.0		ug/L			03/21/13 11:20	1
Styrene	ND		1.0		ug/L			03/21/13 11:20	1
Tert-amyl methyl ether	ND		5.0		ug/L			03/21/13 11:20	1

Method: 8260C - Volatile Organic Compounds (GC/MS) (Continued)

Lab Sample ID: MB 480-108441/7
Matrix: Water
Analysis Batch: 108441

Client Sample ID: Method Blank
Prep Type: Total/NA

Analyte	MB Result	MB Qualifier	RL	MDL	Unit	D	Prepared	Analyzed	Dil Fac
Tert-butyl ethyl ether	ND		5.0		ug/L			03/21/13 11:20	1
tert-Butylbenzene	ND		1.0		ug/L			03/21/13 11:20	1
Tetrachloroethene	ND		1.0		ug/L			03/21/13 11:20	1
Tetrahydrofuran	ND		10		ug/L			03/21/13 11:20	1
Toluene	ND		1.0		ug/L			03/21/13 11:20	1
trans-1,2-Dichloroethene	ND		1.0		ug/L			03/21/13 11:20	1
trans-1,3-Dichloropropene	ND		0.40		ug/L			03/21/13 11:20	1
Trichloroethene	ND		1.0		ug/L			03/21/13 11:20	1
Trichlorofluoromethane	ND		1.0		ug/L			03/21/13 11:20	1
Vinyl chloride	ND		0.50		ug/L			03/21/13 11:20	1
Dibromomethane	ND		1.0		ug/L			03/21/13 11:20	1

Surrogate	*MB %Recovery*	*MB Qualifier*	*Limits*	*Prepared*	*Analyzed*	*Dil Fac*
Toluene-d8 (Surr)	*98*		*70 - 130*		*03/21/13 11:20*	*1*
1,2-Dichloroethane-d4 (Surr)	*94*		*70 - 130*		*03/21/13 11:20*	*1*
4-Bromofluorobenzene (Surr)	*104*		*70 - 130*		*03/21/13 11:20*	*1*

Lab Sample ID: LCS 480-108441/4
Matrix: Water
Analysis Batch: 108441

Client Sample ID: Lab Control Sample
Prep Type: Total/NA

Analyte	Spike Added	LCS Result	LCS Qualifier	Unit	D	%Rec	%Rec. Limits
1,1,1,2-Tetrachloroethane	25.0	25.3		ug/L		101	70 - 130
1,1,1-Trichloroethane	25.0	26.7		ug/L		107	70 - 130
1,1,2,2-Tetrachloroethane	25.0	23.5		ug/L		94	70 - 130
1,1,2-Trichloroethane	25.0	24.1		ug/L		97	70 - 130
1,1-Dichloroethane	25.0	25.1		ug/L		100	70 - 130
1,1-Dichloroethene	25.0	27.3		ug/L		109	70 - 130
1,1-Dichloropropene	25.0	26.9		ug/L		108	70 - 130
1,2,3-Trichlorobenzene	25.0	24.0		ug/L		96	70 - 130
1,2,3-Trichloropropane	25.0	24.7		ug/L		99	70 - 130
1,2,4-Trichlorobenzene	25.0	24.4		ug/L		98	70 - 130
1,2,4-Trimethylbenzene	25.0	23.9		ug/L		96	70 - 130
1,2-Dibromo-3-Chloropropane	25.0	22.4		ug/L		90	70 - 130
1,2-Dichlorobenzene	25.0	23.6		ug/L		94	70 - 130
1,2-Dichloroethane	25.0	23.9		ug/L		96	70 - 130
1,2-Dichloropropane	25.0	23.8		ug/L		95	70 - 130
1,3,5-Trimethylbenzene	25.0	23.7		ug/L		95	70 - 130
1,3-Dichlorobenzene	25.0	24.0		ug/L		96	70 - 130
1,3-Dichloropropane	25.0	24.5		ug/L		98	70 - 130
1,4-Dichlorobenzene	25.0	23.5		ug/L		94	70 - 130
1,4-Dioxane	1000	1030		ug/L		103	70 - 130
2,2-Dichloropropane	25.0	28.4		ug/L		113	70 - 130
2-Butanone (MEK)	125	144		ug/L		115	70 - 130
2-Chlorotoluene	25.0	24.9		ug/L		100	70 - 130
2-Hexanone	125	98.2		ug/L		79	70 - 130
4-Chlorotoluene	25.0	25.4		ug/L		101	70 - 130
4-Isopropyltoluene	25.0	23.7		ug/L		95	70 - 130

Method: 8260C - Volatile Organic Compounds (GC/MS) (Continued)

Lab Sample ID: LCS 480-108441/4
Matrix: Water
Analysis Batch: 108441

Client Sample ID: Lab Control Sample
Prep Type: Total/NA

Analyte	Spike Added	LCS Result	LCS Qualifier	Unit	D	%Rec	%Rec. Limits
4-Methyl-2-pentanone (MIBK)	125	96.8		ug/L		77	70 - 130
Acetone	125	107		ug/L		86	70 - 130
Benzene	25.0	25.7		ug/L		103	70 - 130
Bromobenzene	25.0	24.0		ug/L		96	70 - 130
Bromoform	25.0	25.2		ug/L		101	70 - 130
Bromomethane	25.0	28.0		ug/L		112	70 - 130
Carbon disulfide	25.0	25.4		ug/L		102	70 - 130
Carbon tetrachloride	25.0	26.6		ug/L		106	70 - 130
Chlorobenzene	25.0	24.1		ug/L		96	70 - 130
Chlorobromomethane	25.0	27.2		ug/L		109	70 - 130
Chlorodibromomethane	25.0	25.0		ug/L		100	70 - 130
Chloroethane	25.0	24.8		ug/L		99	70 - 130
Chloroform	25.0	25.7		ug/L		103	70 - 130
Chloromethane	25.0	19.5		ug/L		78	70 - 130
cis-1,2-Dichloroethene	25.0	26.5		ug/L		106	70 - 130
cis-1,3-Dichloropropene	25.0	25.2		ug/L		101	70 - 130
Dichlorobromomethane	25.0	25.7		ug/L		103	70 - 130
Dichlorodifluoromethane	50.0	57.2		ug/L		114	70 - 130
Ethyl ether	25.0	23.6		ug/L		94	70 - 130
Ethylbenzene	25.0	24.1		ug/L		96	70 - 130
Ethylene Dibromide	25.0	25.0		ug/L		100	70 - 130
Hexachlorobutadiene	25.0	22.5		ug/L		90	70 - 130
Isopropyl ether	25.0	19.8		ug/L		79	70 - 130
Isopropylbenzene	25.0	24.1		ug/L		96	70 - 130
Methyl tert-butyl ether	25.0	28.3		ug/L		113	70 - 130
Methylene Chloride	25.0	26.1		ug/L		104	70 - 130
m-Xylene & p-Xylene	50.0	49.2		ug/L		98	70 - 130
Naphthalene	25.0	23.9		ug/L		96	70 - 130
n-Butylbenzene	25.0	23.1		ug/L		92	70 - 130
N-Propylbenzene	25.0	23.6		ug/L		94	70 - 130
o-Xylene	25.0	24.1		ug/L		97	70 - 130
sec-Butylbenzene	25.0	23.6		ug/L		94	70 - 130
Styrene	25.0	24.3		ug/L		97	70 - 130
Tert-amyl methyl ether	25.0	27.4		ug/L		110	70 - 130
Tert-butyl ethyl ether	25.0	23.6		ug/L		95	70 - 130
tert-Butylbenzene	25.0	24.1		ug/L		96	70 - 130
Tetrachloroethene	25.0	24.9		ug/L		100	70 - 130
Tetrahydrofuran	125	98.4		ug/L		79	70 - 130
Toluene	25.0	25.1		ug/L		100	70 - 130
trans-1,2-Dichloroethene	25.0	27.1		ug/L		108	70 - 130
trans-1,3-Dichloropropene	25.0	25.0		ug/L		100	70 - 130
Trichloroethene	25.0	26.2		ug/L		105	70 - 130
Trichlorofluoromethane	25.0	28.4		ug/L		114	70 - 130
Vinyl chloride	25.0	26.9		ug/L		108	70 - 130
Dibromomethane	25.0	25.2		ug/L		101	70 - 130

Surrogate	*LCS %Recovery*	*LCS Qualifier*	*Limits*
Toluene-d8 (Surr)	*97*		*70 - 130*

Method: 8260C - Volatile Organic Compounds (GC/MS) (Continued)

Lab Sample ID: LCS 480-108441/4
Matrix: Water
Analysis Batch: 108441

Client Sample ID: Lab Control Sample
Prep Type: Total/NA

Surrogate	LCS %Recovery	LCS Qualifier	Limits
1,2-Dichloroethane-d4 (Surr)	95		70 - 130
4-Bromofluorobenzene (Surr)	104		70 - 130

Lab Sample ID: LCSD 480-108441/5
Matrix: Water
Analysis Batch: 108441

Client Sample ID: Lab Control Sample Dup
Prep Type: Total/NA

Analyte	Spike Added	LCSD Result	LCSD Qualifier	Unit	D	%Rec	%Rec. Limits	RPD	RPD Limit
1,1,1,2-Tetrachloroethane	25.0	24.8		ug/L		99	70 - 130	2	20
1,1,1-Trichloroethane	25.0	25.4		ug/L		102	70 - 130	5	20
1,1,2,2-Tetrachloroethane	25.0	23.6		ug/L		94	70 - 130	0	20
1,1,2-Trichloroethane	25.0	24.0		ug/L		96	70 - 130	1	20
1,1-Dichloroethane	25.0	24.0		ug/L		96	70 - 130	5	20
1,1-Dichloroethene	25.0	25.7		ug/L		103	70 - 130	6	20
1,1-Dichloropropene	25.0	25.4		ug/L		102	70 - 130	6	20
1,2,3-Trichlorobenzene	25.0	24.0		ug/L		96	70 - 130	0	20
1,2,3-Trichloropropane	25.0	24.7		ug/L		99	70 - 130	0	20
1,2,4-Trichlorobenzene	25.0	24.0		ug/L		96	70 - 130	2	20
1,2,4-Trimethylbenzene	25.0	23.2		ug/L		93	70 - 130	3	20
1,2-Dibromo-3-Chloropropane	25.0	22.5		ug/L		90	70 - 130	0	20
1,2-Dichlorobenzene	25.0	23.6		ug/L		94	70 - 130	0	20
1,2-Dichloroethane	25.0	23.3		ug/L		93	70 - 130	3	20
1,2-Dichloropropane	25.0	23.1		ug/L		93	70 - 130	3	20
1,3,5-Trimethylbenzene	25.0	23.3		ug/L		93	70 - 130	2	20
1,3-Dichlorobenzene	25.0	23.7		ug/L		95	70 - 130	1	20
1,3-Dichloropropane	25.0	24.6		ug/L		99	70 - 130	1	20
1,4-Dichlorobenzene	25.0	23.4		ug/L		94	70 - 130	0	20
1,4-Dioxane	1000	1110		ug/L		111	70 - 130	8	20
2,2-Dichloropropane	25.0	26.7		ug/L		107	70 - 130	6	20
2-Butanone (MEK)	125	142		ug/L		114	70 - 130	1	20
2-Chlorotoluene	25.0	25.1		ug/L		101	70 - 130	1	20
2-Hexanone	125	99.4		ug/L		79	70 - 130	1	20
4-Chlorotoluene	25.0	24.3		ug/L		97	70 - 130	4	20
4-Isopropyltoluene	25.0	23.1		ug/L		92	70 - 130	3	20
4-Methyl-2-pentanone (MIBK)	125	98.1		ug/L		78	70 - 130	1	20
Acetone	125	106		ug/L		85	70 - 130	1	20
Benzene	25.0	25.0		ug/L		100	70 - 130	3	20
Bromobenzene	25.0	23.9		ug/L		96	70 - 130	0	20
Bromoform	25.0	25.7		ug/L		103	70 - 130	2	20
Bromomethane	25.0	23.7		ug/L		95	70 - 130	17	20
Carbon disulfide	25.0	24.5		ug/L		98	70 - 130	3	20
Carbon tetrachloride	25.0	25.5		ug/L		102	70 - 130	4	20
Chlorobenzene	25.0	23.7		ug/L		95	70 - 130	2	20
Chlorobromomethane	25.0	26.6		ug/L		106	70 - 130	2	20
Chlorodibromomethane	25.0	25.0		ug/L		100	70 - 130	0	20
Chloroethane	25.0	23.0		ug/L		92	70 - 130	7	20
Chloroform	25.0	24.9		ug/L		100	70 - 130	3	20
Chloromethane	25.0	18.8		ug/L		75	70 - 130	4	20

Method: 8260C - Volatile Organic Compounds (GC/MS) (Continued)

Lab Sample ID: LCSD 480-108441/5
Matrix: Water
Analysis Batch: 108441

Client Sample ID: Lab Control Sample Dup
Prep Type: Total/NA

Analyte	Spike Added	LCSD Result	LCSD Qualifier	Unit	D	%Rec	%Rec. Limits	RPD	RPD Limit
cis-1,2-Dichloroethene	25.0	25.8		ug/L		103	70 - 130	3	20
cis-1,3-Dichloropropene	25.0	24.7		ug/L		99	70 - 130	2	20
Dichlorobromomethane	25.0	25.3		ug/L		101	70 - 130	2	20
Dichlorodifluoromethane	50.0	53.0		ug/L		106	70 - 130	8	20
Ethyl ether	25.0	23.1		ug/L		93	70 - 130	2	20
Ethylbenzene	25.0	23.8		ug/L		95	70 - 130	1	20
Ethylene Dibromide	25.0	25.1		ug/L		100	70 - 130	0	20
Hexachlorobutadiene	25.0	22.0		ug/L		88	70 - 130	2	20
Isopropyl ether	25.0	19.2		ug/L		77	70 - 130	3	20
Isopropylbenzene	25.0	23.5		ug/L		94	70 - 130	3	20
Methyl tert-butyl ether	25.0	27.5		ug/L		110	70 - 130	3	20
Methylene Chloride	25.0	24.6		ug/L		99	70 - 130	6	20
m-Xylene & p-Xylene	50.0	47.7		ug/L		95	70 - 130	3	20
Naphthalene	25.0	24.0		ug/L		96	70 - 130	0	20
n-Butylbenzene	25.0	22.8		ug/L		91	70 - 130	1	20
N-Propylbenzene	25.0	23.1		ug/L		92	70 - 130	2	20
o-Xylene	25.0	23.6		ug/L		94	70 - 130	2	20
sec-Butylbenzene	25.0	23.1		ug/L		92	70 - 130	2	20
Styrene	25.0	24.2		ug/L		97	70 - 130	0	20
Tert-amyl methyl ether	25.0	26.7		ug/L		107	70 - 130	3	20
Tert-butyl ethyl ether	25.0	23.2		ug/L		93	70 - 130	2	20
tert-Butylbenzene	25.0	23.6		ug/L		94	70 - 130	2	20
Tetrachloroethene	25.0	24.4		ug/L		98	70 - 130	2	20
Tetrahydrofuran	125	97.0		ug/L		78	70 - 130	1	20
Toluene	25.0	24.4		ug/L		98	70 - 130	3	20
trans-1,2-Dichloroethene	25.0	25.9		ug/L		104	70 - 130	5	20
trans-1,3-Dichloropropene	25.0	24.7		ug/L		99	70 - 130	1	20
Trichloroethene	25.0	25.6		ug/L		103	70 - 130	2	20
Trichlorofluoromethane	25.0	26.7		ug/L		107	70 - 130	6	20
Vinyl chloride	25.0	25.2		ug/L		101	70 - 130	7	20
Dibromomethane	25.0	25.3		ug/L		101	70 - 130	0	20

Surrogate	*LCSD %Recovery*	*LCSD Qualifier*	*Limits*
Toluene-d8 (Surr)	*98*		*70 - 130*
1,2-Dichloroethane-d4 (Surr)	*95*		*70 - 130*
4-Bromofluorobenzene (Surr)	*103*		*70 - 130*

Lab Sample ID: MB 480-108444/7
Matrix: Water
Analysis Batch: 108444

Client Sample ID: Method Blank
Prep Type: Total/NA

Analyte	MB Result	MB Qualifier	RL	MDL	Unit	D	Prepared	Analyzed	Dil Fac
1,1,1,2-Tetrachloroethane	ND		1.0		ug/L			03/21/13 10:59	1
1,1,1-Trichloroethane	ND		1.0		ug/L			03/21/13 10:59	1
1,1,2,2-Tetrachloroethane	ND		0.50		ug/L			03/21/13 10:59	1
1,1,2-Trichloroethane	ND		1.0		ug/L			03/21/13 10:59	1
1,1-Dichloroethane	ND		1.0		ug/L			03/21/13 10:59	1
1,1-Dichloroethene	ND		1.0		ug/L			03/21/13 10:59	1

Method: 8260C - Volatile Organic Compounds (GC/MS) (Continued)

Lab Sample ID: MB 480-108444/7
Matrix: Water
Analysis Batch: 108444

Client Sample ID: Method Blank
Prep Type: Total/NA

Analyte	MB Result	MB Qualifier	RL	MDL	Unit	D	Prepared	Analyzed	Dil Fac
1,1-Dichloropropene	ND		1.0		ug/L			03/21/13 10:59	1
1,2,3-Trichlorobenzene	ND		1.0		ug/L			03/21/13 10:59	1
1,2,3-Trichloropropane	ND		1.0		ug/L			03/21/13 10:59	1
1,2,4-Trichlorobenzene	ND		1.0		ug/L			03/21/13 10:59	1
1,2,4-Trimethylbenzene	ND		1.0		ug/L			03/21/13 10:59	1
1,2-Dibromo-3-Chloropropane	ND		5.0		ug/L			03/21/13 10:59	1
1,2-Dichlorobenzene	ND		1.0		ug/L			03/21/13 10:59	1
1,2-Dichloroethane	ND		1.0		ug/L			03/21/13 10:59	1
1,2-Dichloropropane	ND		1.0		ug/L			03/21/13 10:59	1
1,3,5-Trimethylbenzene	ND		1.0		ug/L			03/21/13 10:59	1
1,3-Dichlorobenzene	ND		1.0		ug/L			03/21/13 10:59	1
1,3-Dichloropropane	ND		1.0		ug/L			03/21/13 10:59	1
1,4-Dichlorobenzene	ND		1.0		ug/L			03/21/13 10:59	1
1,4-Dioxane	ND		50		ug/L			03/21/13 10:59	1
2,2-Dichloropropane	ND		1.0		ug/L			03/21/13 10:59	1
2-Butanone (MEK)	ND		10		ug/L			03/21/13 10:59	1
2-Chlorotoluene	ND		1.0		ug/L			03/21/13 10:59	1
2-Hexanone	ND		10		ug/L			03/21/13 10:59	1
4-Chlorotoluene	ND		1.0		ug/L			03/21/13 10:59	1
4-Isopropyltoluene	ND		1.0		ug/L			03/21/13 10:59	1
4-Methyl-2-pentanone (MIBK)	ND		10		ug/L			03/21/13 10:59	1
Acetone	ND		50		ug/L			03/21/13 10:59	1
Benzene	ND		1.0		ug/L			03/21/13 10:59	1
Bromobenzene	ND		1.0		ug/L			03/21/13 10:59	1
Bromoform	ND		1.0		ug/L			03/21/13 10:59	1
Bromomethane	ND		2.0		ug/L			03/21/13 10:59	1
Carbon disulfide	ND		10		ug/L			03/21/13 10:59	1
Carbon tetrachloride	ND		1.0		ug/L			03/21/13 10:59	1
Chlorobenzene	ND		1.0		ug/L			03/21/13 10:59	1
Chlorobromomethane	ND		1.0		ug/L			03/21/13 10:59	1
Chlorodibromomethane	ND		0.50		ug/L			03/21/13 10:59	1
Chloroethane	ND		2.0		ug/L			03/21/13 10:59	1
Chloroform	ND		1.0		ug/L			03/21/13 10:59	1
Chloromethane	ND		2.0		ug/L			03/21/13 10:59	1
cis-1,2-Dichloroethene	ND		1.0		ug/L			03/21/13 10:59	1
cis-1,3-Dichloropropene	ND		0.40		ug/L			03/21/13 10:59	1
Dichlorobromomethane	ND		0.50		ug/L			03/21/13 10:59	1
Dichlorodifluoromethane	ND		1.0		ug/L			03/21/13 10:59	1
Ethyl ether	ND		1.0		ug/L			03/21/13 10:59	1
Ethylbenzene	ND		1.0		ug/L			03/21/13 10:59	1
Ethylene Dibromide	ND		1.0		ug/L			03/21/13 10:59	1
Hexachlorobutadiene	ND		0.40		ug/L			03/21/13 10:59	1
Isopropyl ether	ND		10		ug/L			03/21/13 10:59	1
Isopropylbenzene	ND		1.0		ug/L			03/21/13 10:59	1
Methyl tert-butyl ether	ND		1.0		ug/L			03/21/13 10:59	1
Methylene Chloride	ND		1.0		ug/L			03/21/13 10:59	1
m-Xylene & p-Xylene	ND		2.0		ug/L			03/21/13 10:59	1
Naphthalene	ND		5.0		ug/L			03/21/13 10:59	1

Method: 8260C - Volatile Organic Compounds (GC/MS) (Continued)

Lab Sample ID: MB 480-108444/7
Matrix: Water
Analysis Batch: 108444

Client Sample ID: Method Blank
Prep Type: Total/NA

Analyte	MB Result	MB Qualifier	RL	MDL	Unit	D	Prepared	Analyzed	Dil Fac
n-Butylbenzene	ND		1.0		ug/L			03/21/13 10:59	1
N-Propylbenzene	ND		1.0		ug/L			03/21/13 10:59	1
o-Xylene	ND		1.0		ug/L			03/21/13 10:59	1
sec-Butylbenzene	ND		1.0		ug/L			03/21/13 10:59	1
Styrene	ND		1.0		ug/L			03/21/13 10:59	1
Tert-amyl methyl ether	ND		5.0		ug/L			03/21/13 10:59	1
Tert-butyl ethyl ether	ND		5.0		ug/L			03/21/13 10:59	1
tert-Butylbenzene	ND		1.0		ug/L			03/21/13 10:59	1
Tetrachloroethene	ND		1.0		ug/L			03/21/13 10:59	1
Tetrahydrofuran	ND		10		ug/L			03/21/13 10:59	1
Toluene	ND		1.0		ug/L			03/21/13 10:59	1
trans-1,2-Dichloroethene	ND		1.0		ug/L			03/21/13 10:59	1
trans-1,3-Dichloropropene	ND		0.40		ug/L			03/21/13 10:59	1
Trichloroethene	ND		1.0		ug/L			03/21/13 10:59	1
Trichlorofluoromethane	ND		1.0		ug/L			03/21/13 10:59	1
Vinyl chloride	ND		0.50		ug/L			03/21/13 10:59	1
Dibromomethane	ND		1.0		ug/L			03/21/13 10:59	1

Surrogate	*MB %Recovery*	*MB Qualifier*	*Limits*	*Prepared*	*Analyzed*	*Dil Fac*
Toluene-d8 (Surr)	*96*		*70 - 130*		*03/21/13 10:59*	*1*
1,2-Dichloroethane-d4 (Surr)	*96*		*70 - 130*		*03/21/13 10:59*	*1*
4-Bromofluorobenzene (Surr)	*100*		*70 - 130*		*03/21/13 10:59*	*1*

Lab Sample ID: LCS 480-108444/4
Matrix: Water
Analysis Batch: 108444

Client Sample ID: Lab Control Sample
Prep Type: Total/NA

Analyte	Spike Added	LCS Result	LCS Qualifier	Unit	D	%Rec	%Rec. Limits
1,1,1,2-Tetrachloroethane	25.0	24.1		ug/L		97	70 - 130
1,1,1-Trichloroethane	25.0	23.1		ug/L		93	70 - 130
1,1,2,2-Tetrachloroethane	25.0	23.2		ug/L		93	70 - 130
1,1,2-Trichloroethane	25.0	23.3		ug/L		93	70 - 130
1,1-Dichloroethane	25.0	23.2		ug/L		93	70 - 130
1,1-Dichloroethene	25.0	23.6		ug/L		94	70 - 130
1,1-Dichloropropene	25.0	23.8		ug/L		95	70 - 130
1,2,3-Trichlorobenzene	25.0	24.2		ug/L		97	70 - 130
1,2,3-Trichloropropane	25.0	23.8		ug/L		95	70 - 130
1,2,4-Trichlorobenzene	25.0	24.9		ug/L		100	70 - 130
1,2,4-Trimethylbenzene	25.0	22.6		ug/L		91	70 - 130
1,2-Dibromo-3-Chloropropane	25.0	24.2		ug/L		97	70 - 130
1,2-Dichlorobenzene	25.0	23.1		ug/L		92	70 - 130
1,2-Dichloroethane	25.0	22.6		ug/L		91	70 - 130
1,2-Dichloropropane	25.0	23.5		ug/L		94	70 - 130
1,3,5-Trimethylbenzene	25.0	22.6		ug/L		90	70 - 130
1,3-Dichlorobenzene	25.0	23.0		ug/L		92	70 - 130
1,3-Dichloropropane	25.0	22.8		ug/L		91	70 - 130
1,4-Dichlorobenzene	25.0	23.2		ug/L		93	70 - 130
1,4-Dioxane	1000	1050		ug/L		105	70 - 130

Method: 8260C - Volatile Organic Compounds (GC/MS) (Continued)

Lab Sample ID: LCS 480-108444/4
Matrix: Water
Analysis Batch: 108444

Client Sample ID: Lab Control Sample
Prep Type: Total/NA

Analyte	Spike Added	LCS Result	LCS Qualifier	Unit	D	%Rec	%Rec. Limits
2,2-Dichloropropane	25.0	22.4		ug/L		90	70 - 130
2-Butanone (MEK)	125	174	*	ug/L		139	70 - 130
2-Chlorotoluene	25.0	22.3		ug/L		89	70 - 130
2-Hexanone	125	119		ug/L		95	70 - 130
4-Chlorotoluene	25.0	20.0		ug/L		80	70 - 130
4-Isopropyltoluene	25.0	23.4		ug/L		94	70 - 130
4-Methyl-2-pentanone (MIBK)	125	119		ug/L		95	70 - 130
Acetone	125	136		ug/L		109	70 - 130
Benzene	25.0	23.1		ug/L		92	70 - 130
Bromobenzene	25.0	23.1		ug/L		92	70 - 130
Bromoform	25.0	24.9		ug/L		100	70 - 130
Bromomethane	25.0	19.1		ug/L		76	70 - 130
Carbon disulfide	25.0	23.3		ug/L		93	70 - 130
Carbon tetrachloride	25.0	23.7		ug/L		95	70 - 130
Chlorobenzene	25.0	23.3		ug/L		93	70 - 130
Chlorobromomethane	25.0	25.1		ug/L		100	70 - 130
Chlorodibromomethane	25.0	24.2		ug/L		97	70 - 130
Chloroethane	25.0	23.5		ug/L		94	70 - 130
Chloroform	25.0	23.0		ug/L		92	70 - 130
Chloromethane	25.0	22.3		ug/L		89	70 - 130
cis-1,2-Dichloroethene	25.0	24.3		ug/L		97	70 - 130
cis-1,3-Dichloropropene	25.0	24.2		ug/L		97	70 - 130
Dichlorobromomethane	25.0	23.2		ug/L		93	70 - 130
Dichlorodifluoromethane	50.0	56.5		ug/L		113	70 - 130
Ethyl ether	25.0	24.8		ug/L		99	70 - 130
Ethylbenzene	25.0	22.8		ug/L		91	70 - 130
Ethylene Dibromide	25.0	23.7		ug/L		95	70 - 130
Hexachlorobutadiene	25.0	23.1		ug/L		93	70 - 130
Isopropyl ether	25.0	24.8		ug/L		99	70 - 130
Isopropylbenzene	25.0	22.4		ug/L		89	70 - 130
Methyl tert-butyl ether	25.0	24.4		ug/L		98	70 - 130
Methylene Chloride	25.0	22.3		ug/L		89	70 - 130
m-Xylene & p-Xylene	50.0	46.2		ug/L		92	70 - 130
Naphthalene	25.0	24.2		ug/L		97	70 - 130
n-Butylbenzene	25.0	22.8		ug/L		91	70 - 130
N-Propylbenzene	25.0	22.7		ug/L		91	70 - 130
o-Xylene	25.0	23.1		ug/L		93	70 - 130
sec-Butylbenzene	25.0	22.8		ug/L		91	70 - 130
Styrene	25.0	23.5		ug/L		94	70 - 130
Tert-amyl methyl ether	25.0	24.9		ug/L		99	70 - 130
Tert-butyl ethyl ether	25.0	24.4		ug/L		98	70 - 130
tert-Butylbenzene	25.0	23.6		ug/L		95	70 - 130
Tetrachloroethene	25.0	24.7		ug/L		99	70 - 130
Tetrahydrofuran	125	128		ug/L		103	70 - 130
Toluene	25.0	22.8		ug/L		91	70 - 130
trans-1,2-Dichloroethene	25.0	23.4		ug/L		93	70 - 130
trans-1,3-Dichloropropene	25.0	23.4		ug/L		94	70 - 130
Trichloroethene	25.0	23.5		ug/L		94	70 - 130

Method: 8260C - Volatile Organic Compounds (GC/MS) (Continued)

Lab Sample ID: LCS 480-108444/4
Matrix: Water
Analysis Batch: 108444

Client Sample ID: Lab Control Sample
Prep Type: Total/NA

Analyte	Spike Added	LCS Result	LCS Qualifier	Unit	D	%Rec	%Rec. Limits
Trichlorofluoromethane	25.0	25.6		ug/L		103	70 - 130
Vinyl chloride	25.0	21.9		ug/L		88	70 - 130
Dibromomethane	25.0	24.4		ug/L		97	70 - 130

Surrogate	*LCS %Recovery*	*LCS Qualifier*	*Limits*
Toluene-d8 (Surr)	*99*		*70 - 130*
1,2-Dichloroethane-d4 (Surr)	*97*		*70 - 130*
4-Bromofluorobenzene (Surr)	*104*		*70 - 130*

Lab Sample ID: LCSD 480-108444/5
Matrix: Water
Analysis Batch: 108444

Client Sample ID: Lab Control Sample Dup
Prep Type: Total/NA

Analyte	Spike Added	LCSD Result	LCSD Qualifier	Unit	D	%Rec	%Rec. Limits	RPD	RPD Limit
1,1,1,2-Tetrachloroethane	25.0	23.2		ug/L		93	70 - 130	4	20
1,1,1-Trichloroethane	25.0	22.0		ug/L		88	70 - 130	5	20
1,1,2,2-Tetrachloroethane	25.0	23.5		ug/L		94	70 - 130	1	20
1,1,2-Trichloroethane	25.0	23.5		ug/L		94	70 - 130	1	20
1,1-Dichloroethane	25.0	22.5		ug/L		90	70 - 130	3	20
1,1-Dichloroethene	25.0	21.9		ug/L		88	70 - 130	7	20
1,1-Dichloropropene	25.0	22.7		ug/L		91	70 - 130	4	20
1,2,3-Trichlorobenzene	25.0	23.2		ug/L		93	70 - 130	4	20
1,2,3-Trichloropropane	25.0	24.0		ug/L		96	70 - 130	1	20
1,2,4-Trichlorobenzene	25.0	24.3		ug/L		97	70 - 130	2	20
1,2,4-Trimethylbenzene	25.0	22.5		ug/L		90	70 - 130	1	20
1,2-Dibromo-3-Chloropropane	25.0	24.5		ug/L		98	70 - 130	1	20
1,2-Dichlorobenzene	25.0	23.1		ug/L		92	70 - 130	0	20
1,2-Dichloroethane	25.0	22.3		ug/L		89	70 - 130	2	20
1,2-Dichloropropane	25.0	22.7		ug/L		91	70 - 130	4	20
1,3,5-Trimethylbenzene	25.0	22.0		ug/L		88	70 - 130	3	20
1,3-Dichlorobenzene	25.0	23.3		ug/L		93	70 - 130	1	20
1,3-Dichloropropane	25.0	22.2		ug/L		89	70 - 130	2	20
1,4-Dichlorobenzene	25.0	23.0		ug/L		92	70 - 130	1	20
1,4-Dioxane	1000	973		ug/L		97	70 - 130	8	20
2,2-Dichloropropane	25.0	21.5		ug/L		86	70 - 130	4	20
2-Butanone (MEK)	125	169	*	ug/L		136	70 - 130	3	20
2-Chlorotoluene	25.0	22.5		ug/L		90	70 - 130	1	20
2-Hexanone	125	118		ug/L		94	70 - 130	1	20
4-Chlorotoluene	25.0	19.9		ug/L		80	70 - 130	0	20
4-Isopropyltoluene	25.0	22.8		ug/L		91	70 - 130	3	20
4-Methyl-2-pentanone (MIBK)	125	118		ug/L		95	70 - 130	1	20
Acetone	125	120		ug/L		96	70 - 130	13	20
Benzene	25.0	22.4		ug/L		89	70 - 130	3	20
Bromobenzene	25.0	23.4		ug/L		93	70 - 130	1	20
Bromoform	25.0	24.4		ug/L		98	70 - 130	2	20
Bromomethane	25.0	22.4		ug/L		90	70 - 130	16	20
Carbon disulfide	25.0	22.2		ug/L		89	70 - 130	5	20
Carbon tetrachloride	25.0	22.5		ug/L		90	70 - 130	5	20

Method: 8260C - Volatile Organic Compounds (GC/MS) (Continued)

Lab Sample ID: LCSD 480-108444/5
Matrix: Water
Analysis Batch: 108444

Client Sample ID: Lab Control Sample Dup
Prep Type: Total/NA

Analyte	Spike Added	LCSD Result	LCSD Qualifier	Unit	D	%Rec	%Rec. Limits	RPD	RPD Limit
Chlorobenzene	25.0	22.8		ug/L		91	70 - 130	3	20
Chlorobromomethane	25.0	24.7		ug/L		99	70 - 130	2	20
Chlorodibromomethane	25.0	23.8		ug/L		95	70 - 130	2	20
Chloroethane	25.0	22.7		ug/L		91	70 - 130	3	20
Chloroform	25.0	21.9		ug/L		88	70 - 130	5	20
Chloromethane	25.0	21.6		ug/L		86	70 - 130	3	20
cis-1,2-Dichloroethene	25.0	22.9		ug/L		91	70 - 130	6	20
cis-1,3-Dichloropropene	25.0	23.4		ug/L		94	70 - 130	4	20
Dichlorobromomethane	25.0	22.6		ug/L		90	70 - 130	2	20
Dichlorodifluoromethane	50.0	53.7		ug/L		107	70 - 130	5	20
Ethyl ether	25.0	24.3		ug/L		97	70 - 130	2	20
Ethylbenzene	25.0	22.1		ug/L		88	70 - 130	3	20
Ethylene Dibromide	25.0	23.5		ug/L		94	70 - 130	1	20
Hexachlorobutadiene	25.0	22.1		ug/L		88	70 - 130	5	20
Isopropyl ether	25.0	24.2		ug/L		97	70 - 130	3	20
Isopropylbenzene	25.0	22.1		ug/L		88	70 - 130	1	20
Methyl tert-butyl ether	25.0	24.1		ug/L		97	70 - 130	1	20
Methylene Chloride	25.0	21.2		ug/L		85	70 - 130	5	20
m-Xylene & p-Xylene	50.0	44.5		ug/L		89	70 - 130	4	20
Naphthalene	25.0	23.5		ug/L		94	70 - 130	3	20
n-Butylbenzene	25.0	22.4		ug/L		90	70 - 130	2	20
N-Propylbenzene	25.0	22.3		ug/L		89	70 - 130	2	20
o-Xylene	25.0	22.8		ug/L		91	70 - 130	1	20
sec-Butylbenzene	25.0	22.6		ug/L		90	70 - 130	1	20
Styrene	25.0	22.7		ug/L		91	70 - 130	3	20
Tert-amyl methyl ether	25.0	24.5		ug/L		98	70 - 130	2	20
Tert-butyl ethyl ether	25.0	23.8		ug/L		95	70 - 130	3	20
tert-Butylbenzene	25.0	22.7		ug/L		91	70 - 130	4	20
Tetrachloroethene	25.0	23.8		ug/L		95	70 - 130	4	20
Tetrahydrofuran	125	122		ug/L		98	70 - 130	5	20
Toluene	25.0	22.2		ug/L		89	70 - 130	3	20
trans-1,2-Dichloroethene	25.0	22.9		ug/L		92	70 - 130	2	20
trans-1,3-Dichloropropene	25.0	22.9		ug/L		92	70 - 130	2	20
Trichloroethene	25.0	22.8		ug/L		91	70 - 130	3	20
Trichlorofluoromethane	25.0	23.7		ug/L		95	70 - 130	8	20
Vinyl chloride	25.0	21.0		ug/L		84	70 - 130	5	20
Dibromomethane	25.0	23.6		ug/L		95	70 - 130	3	20

Surrogate	*LCSD %Recovery*	*LCSD Qualifier*	*Limits*
Toluene-d8 (Surr)	*99*		*70 - 130*
1,2-Dichloroethane-d4 (Surr)	*97*		*70 - 130*
4-Bromofluorobenzene (Surr)	*103*		*70 - 130*

Method: 8260C - Volatile Organic Compounds (GC/MS) (Continued)

Lab Sample ID: MB 480-108596/7
Matrix: Water
Analysis Batch: 108596

Client Sample ID: Method Blank
Prep Type: Total/NA

Analyte	MB Result	MB Qualifier	RL	MDL	Unit	D	Prepared	Analyzed	Dil Fac
1,1,1,2-Tetrachloroethane	ND		1.0		ug/L			03/22/13 00:17	1
1,1,1-Trichloroethane	ND		1.0		ug/L			03/22/13 00:17	1
1,1,2,2-Tetrachloroethane	ND		0.50		ug/L			03/22/13 00:17	1
1,1,2-Trichloroethane	ND		1.0		ug/L			03/22/13 00:17	1
1,1-Dichloroethane	ND		1.0		ug/L			03/22/13 00:17	1
1,1-Dichloroethene	ND		1.0		ug/L			03/22/13 00:17	1
1,1-Dichloropropene	ND		1.0		ug/L			03/22/13 00:17	1
1,2,3-Trichlorobenzene	ND		1.0		ug/L			03/22/13 00:17	1
1,2,3-Trichloropropane	ND		1.0		ug/L			03/22/13 00:17	1
1,2,4-Trichlorobenzene	ND		1.0		ug/L			03/22/13 00:17	1
1,2,4-Trimethylbenzene	ND		1.0		ug/L			03/22/13 00:17	1
1,2-Dibromo-3-Chloropropane	ND		5.0		ug/L			03/22/13 00:17	1
1,2-Dichlorobenzene	ND		1.0		ug/L			03/22/13 00:17	1
1,2-Dichloroethane	ND		1.0		ug/L			03/22/13 00:17	1
1,2-Dichloropropane	ND		1.0		ug/L			03/22/13 00:17	1
1,3,5-Trimethylbenzene	ND		1.0		ug/L			03/22/13 00:17	1
1,3-Dichlorobenzene	ND		1.0		ug/L			03/22/13 00:17	1
1,3-Dichloropropane	ND		1.0		ug/L			03/22/13 00:17	1
1,4-Dichlorobenzene	ND		1.0		ug/L			03/22/13 00:17	1
1,4-Dioxane	ND		50		ug/L			03/22/13 00:17	1
2,2-Dichloropropane	ND		1.0		ug/L			03/22/13 00:17	1
2-Butanone (MEK)	ND		10		ug/L			03/22/13 00:17	1
2-Chlorotoluene	ND		1.0		ug/L			03/22/13 00:17	1
2-Hexanone	ND		10		ug/L			03/22/13 00:17	1
4-Chlorotoluene	ND		1.0		ug/L			03/22/13 00:17	1
4-Isopropyltoluene	ND		1.0		ug/L			03/22/13 00:17	1
4-Methyl-2-pentanone (MIBK)	ND		10		ug/L			03/22/13 00:17	1
Acetone	ND		50		ug/L			03/22/13 00:17	1
Benzene	ND		1.0		ug/L			03/22/13 00:17	1
Bromobenzene	ND		1.0		ug/L			03/22/13 00:17	1
Bromoform	ND		1.0		ug/L			03/22/13 00:17	1
Bromomethane	ND		2.0		ug/L			03/22/13 00:17	1
Carbon disulfide	ND		10		ug/L			03/22/13 00:17	1
Carbon tetrachloride	ND		1.0		ug/L			03/22/13 00:17	1
Chlorobenzene	ND		1.0		ug/L			03/22/13 00:17	1
Chlorobromomethane	ND		1.0		ug/L			03/22/13 00:17	1
Chlorodibromomethane	ND		0.50		ug/L			03/22/13 00:17	1
Chloroethane	ND		2.0		ug/L			03/22/13 00:17	1
Chloroform	ND		1.0		ug/L			03/22/13 00:17	1
Chloromethane	ND		2.0		ug/L			03/22/13 00:17	1
cis-1,2-Dichloroethene	ND		1.0		ug/L			03/22/13 00:17	1
cis-1,3-Dichloropropene	ND		0.40		ug/L			03/22/13 00:17	1
Dichlorobromomethane	ND		0.50		ug/L			03/22/13 00:17	1
Dichlorodifluoromethane	ND		1.0		ug/L			03/22/13 00:17	1
Ethyl ether	ND		1.0		ug/L			03/22/13 00:17	1
Ethylbenzene	ND		1.0		ug/L			03/22/13 00:17	1
Ethylene Dibromide	ND		1.0		ug/L			03/22/13 00:17	1
Hexachlorobutadiene	ND		0.40		ug/L			03/22/13 00:17	1

Method: 8260C - Volatile Organic Compounds (GC/MS) (Continued)

Lab Sample ID: MB 480-108596/7
Matrix: Water
Analysis Batch: 108596

Client Sample ID: Method Blank
Prep Type: Total/NA

Analyte	MB Result	MB Qualifier	RL	MDL	Unit	D	Prepared	Analyzed	Dil Fac
Isopropyl ether	ND		10		ug/L			03/22/13 00:17	1
Isopropylbenzene	ND		1.0		ug/L			03/22/13 00:17	1
Methyl tert-butyl ether	ND		1.0		ug/L			03/22/13 00:17	1
Methylene Chloride	ND		1.0		ug/L			03/22/13 00:17	1
m-Xylene & p-Xylene	ND		2.0		ug/L			03/22/13 00:17	1
Naphthalene	ND		5.0		ug/L			03/22/13 00:17	1
n-Butylbenzene	ND		1.0		ug/L			03/22/13 00:17	1
N-Propylbenzene	ND		1.0		ug/L			03/22/13 00:17	1
o-Xylene	ND		1.0		ug/L			03/22/13 00:17	1
sec-Butylbenzene	ND		1.0		ug/L			03/22/13 00:17	1
Styrene	ND		1.0		ug/L			03/22/13 00:17	1
Tert-amyl methyl ether	ND		5.0		ug/L			03/22/13 00:17	1
Tert-butyl ethyl ether	ND		5.0		ug/L			03/22/13 00:17	1
tert-Butylbenzene	ND		1.0		ug/L			03/22/13 00:17	1
Tetrachloroethene	ND		1.0		ug/L			03/22/13 00:17	1
Tetrahydrofuran	ND		10		ug/L			03/22/13 00:17	1
Toluene	ND		1.0		ug/L			03/22/13 00:17	1
trans-1,2-Dichloroethene	ND		1.0		ug/L			03/22/13 00:17	1
trans-1,3-Dichloropropene	ND		0.40		ug/L			03/22/13 00:17	1
Trichloroethene	ND		1.0		ug/L			03/22/13 00:17	1
Trichlorofluoromethane	ND		1.0		ug/L			03/22/13 00:17	1
Vinyl chloride	ND		0.50		ug/L			03/22/13 00:17	1
Dibromomethane	ND		1.0		ug/L			03/22/13 00:17	1

Surrogate	*MB %Recovery*	*MB Qualifier*	*Limits*	*Prepared*	*Analyzed*	*Dil Fac*
Toluene-d8 (Surr)	*97*		*70 - 130*		*03/22/13 00:17*	*1*
1,2-Dichloroethane-d4 (Surr)	*95*		*70 - 130*		*03/22/13 00:17*	*1*
4-Bromofluorobenzene (Surr)	*101*		*70 - 130*		*03/22/13 00:17*	*1*

Lab Sample ID: LCS 480-108596/4
Matrix: Water
Analysis Batch: 108596

Client Sample ID: Lab Control Sample
Prep Type: Total/NA

Analyte	Spike Added	LCS Result	LCS Qualifier	Unit	D	%Rec	%Rec. Limits
1,1,1,2-Tetrachloroethane	25.0	23.4		ug/L		94	70 - 130
1,1,1-Trichloroethane	25.0	22.3		ug/L		89	70 - 130
1,1,2,2-Tetrachloroethane	25.0	24.0		ug/L		96	70 - 130
1,1,2-Trichloroethane	25.0	23.3		ug/L		93	70 - 130
1,1-Dichloroethane	25.0	23.5		ug/L		94	70 - 130
1,1-Dichloroethene	25.0	23.2		ug/L		93	70 - 130
1,1-Dichloropropene	25.0	23.7		ug/L		95	70 - 130
1,2,3-Trichlorobenzene	25.0	24.4		ug/L		98	70 - 130
1,2,3-Trichloropropane	25.0	24.1		ug/L		96	70 - 130
1,2,4-Trichlorobenzene	25.0	25.4		ug/L		102	70 - 130
1,2,4-Trimethylbenzene	25.0	23.4		ug/L		94	70 - 130
1,2-Dibromo-3-Chloropropane	25.0	25.0		ug/L		100	70 - 130
1,2-Dichlorobenzene	25.0	23.9		ug/L		96	70 - 130
1,2-Dichloroethane	25.0	22.9		ug/L		92	70 - 130

Method: 8260C - Volatile Organic Compounds (GC/MS) (Continued)

Lab Sample ID: LCS 480-108596/4
Matrix: Water
Analysis Batch: 108596

Client Sample ID: Lab Control Sample
Prep Type: Total/NA

Analyte	Spike Added	LCS Result	LCS Qualifier	Unit	D	%Rec	%Rec. Limits
1,2-Dichloropropane	25.0	23.5		ug/L		94	70 - 130
1,3,5-Trimethylbenzene	25.0	23.2		ug/L		93	70 - 130
1,3-Dichlorobenzene	25.0	23.7		ug/L		95	70 - 130
1,3-Dichloropropane	25.0	23.4		ug/L		94	70 - 130
1,4-Dichlorobenzene	25.0	23.8		ug/L		95	70 - 130
1,4-Dioxane	1000	1010		ug/L		101	70 - 130
2,2-Dichloropropane	25.0	20.8		ug/L		83	70 - 130
2-Butanone (MEK)	125	173	*	ug/L		138	70 - 130
2-Chlorotoluene	25.0	23.2		ug/L		93	70 - 130
2-Hexanone	125	115		ug/L		92	70 - 130
4-Chlorotoluene	25.0	20.7		ug/L		83	70 - 130
4-Isopropyltoluene	25.0	23.9		ug/L		96	70 - 130
4-Methyl-2-pentanone (MIBK)	125	117		ug/L		93	70 - 130
Acetone	125	117		ug/L		93	70 - 130
Benzene	25.0	23.5		ug/L		94	70 - 130
Bromobenzene	25.0	23.6		ug/L		95	70 - 130
Bromoform	25.0	24.2		ug/L		97	70 - 130
Bromomethane	25.0	21.5		ug/L		86	70 - 130
Carbon disulfide	25.0	21.3		ug/L		85	70 - 130
Carbon tetrachloride	25.0	22.4		ug/L		90	70 - 130
Chlorobenzene	25.0	23.7		ug/L		95	70 - 130
Chlorobromomethane	25.0	25.4		ug/L		102	70 - 130
Chlorodibromomethane	25.0	24.3		ug/L		97	70 - 130
Chloroethane	25.0	22.3		ug/L		89	70 - 130
Chloroform	25.0	23.3		ug/L		93	70 - 130
Chloromethane	25.0	23.3		ug/L		93	70 - 130
cis-1,2-Dichloroethene	25.0	24.5		ug/L		98	70 - 130
cis-1,3-Dichloropropene	25.0	24.4		ug/L		97	70 - 130
Dichlorobromomethane	25.0	23.6		ug/L		94	70 - 130
Dichlorodifluoromethane	50.0	53.0		ug/L		106	70 - 130
Ethyl ether	25.0	24.5		ug/L		98	70 - 130
Ethylbenzene	25.0	23.1		ug/L		92	70 - 130
Ethylene Dibromide	25.0	24.2		ug/L		97	70 - 130
Hexachlorobutadiene	25.0	23.3		ug/L		93	70 - 130
Isopropyl ether	25.0	25.2		ug/L		101	70 - 130
Isopropylbenzene	25.0	23.1		ug/L		92	70 - 130
Methyl tert-butyl ether	25.0	23.4		ug/L		94	70 - 130
Methylene Chloride	25.0	22.8		ug/L		91	70 - 130
m-Xylene & p-Xylene	50.0	47.8		ug/L		96	70 - 130
Naphthalene	25.0	24.7		ug/L		99	70 - 130
n-Butylbenzene	25.0	23.2		ug/L		93	70 - 130
N-Propylbenzene	25.0	22.8		ug/L		91	70 - 130
o-Xylene	25.0	23.8		ug/L		95	70 - 130
sec-Butylbenzene	25.0	23.3		ug/L		93	70 - 130
Styrene	25.0	23.7		ug/L		95	70 - 130
Tert-amyl methyl ether	25.0	24.7		ug/L		99	70 - 130
Tert-butyl ethyl ether	25.0	24.5		ug/L		98	70 - 130
tert-Butylbenzene	25.0	24.0		ug/L		96	70 - 130

Method: 8260C - Volatile Organic Compounds (GC/MS) (Continued)

Lab Sample ID: LCS 480-108596/4
Matrix: Water
Analysis Batch: 108596

Client Sample ID: Lab Control Sample
Prep Type: Total/NA

Analyte	Spike Added	LCS Result	LCS Qualifier	Unit	D	%Rec	%Rec. Limits
Tetrachloroethene	25.0	25.2		ug/L		101	70 - 130
Tetrahydrofuran	125	119		ug/L		95	70 - 130
Toluene	25.0	23.6		ug/L		94	70 - 130
trans-1,2-Dichloroethene	25.0	23.9		ug/L		96	70 - 130
trans-1,3-Dichloropropene	25.0	23.1		ug/L		93	70 - 130
Trichloroethene	25.0	24.1		ug/L		97	70 - 130
Trichlorofluoromethane	25.0	24.5		ug/L		98	70 - 130
Vinyl chloride	25.0	22.4		ug/L		89	70 - 130
Dibromomethane	25.0	24.3		ug/L		97	70 - 130

Surrogate	*LCS %Recovery*	*LCS Qualifier*	*Limits*
Toluene-d8 (Surr)	*97*		*70 - 130*
1,2-Dichloroethane-d4 (Surr)	*94*		*70 - 130*
4-Bromofluorobenzene (Surr)	*102*		*70 - 130*

Lab Sample ID: LCSD 480-108596/5
Matrix: Water
Analysis Batch: 108596

Client Sample ID: Lab Control Sample Dup
Prep Type: Total/NA

Analyte	Spike Added	LCSD Result	LCSD Qualifier	Unit	D	%Rec	%Rec. Limits	RPD	RPD Limit
1,1,1,2-Tetrachloroethane	25.0	24.6		ug/L		98	70 - 130	5	20
1,1,1-Trichloroethane	25.0	22.5		ug/L		90	70 - 130	1	20
1,1,2,2-Tetrachloroethane	25.0	23.6		ug/L		94	70 - 130	1	20
1,1,2-Trichloroethane	25.0	23.9		ug/L		96	70 - 130	2	20
1,1-Dichloroethane	25.0	22.7		ug/L		91	70 - 130	3	20
1,1-Dichloroethene	25.0	21.9		ug/L		88	70 - 130	6	20
1,1-Dichloropropene	25.0	23.5		ug/L		94	70 - 130	1	20
1,2,3-Trichlorobenzene	25.0	24.6		ug/L		98	70 - 130	1	20
1,2,3-Trichloropropane	25.0	23.9		ug/L		96	70 - 130	1	20
1,2,4-Trichlorobenzene	25.0	25.5		ug/L		102	70 - 130	1	20
1,2,4-Trimethylbenzene	25.0	23.2		ug/L		93	70 - 130	1	20
1,2-Dibromo-3-Chloropropane	25.0	22.9		ug/L		92	70 - 130	9	20
1,2-Dichlorobenzene	25.0	23.6		ug/L		95	70 - 130	1	20
1,2-Dichloroethane	25.0	22.6		ug/L		90	70 - 130	2	20
1,2-Dichloropropane	25.0	23.6		ug/L		95	70 - 130	1	20
1,3,5-Trimethylbenzene	25.0	22.6		ug/L		90	70 - 130	2	20
1,3-Dichlorobenzene	25.0	23.8		ug/L		95	70 - 130	0	20
1,3-Dichloropropane	25.0	23.0		ug/L		92	70 - 130	2	20
1,4-Dichlorobenzene	25.0	23.9		ug/L		96	70 - 130	0	20
1,4-Dioxane	1000	912		ug/L		91	70 - 130	11	20
2,2-Dichloropropane	25.0	21.9		ug/L		87	70 - 130	5	20
2-Butanone (MEK)	125	161		ug/L		128	70 - 130	7	20
2-Chlorotoluene	25.0	22.6		ug/L		90	70 - 130	3	20
2-Hexanone	125	109		ug/L		87	70 - 130	6	20
4-Chlorotoluene	25.0	20.2		ug/L		81	70 - 130	2	20
4-Isopropyltoluene	25.0	23.4		ug/L		93	70 - 130	2	20
4-Methyl-2-pentanone (MIBK)	125	111		ug/L		89	70 - 130	5	20
Acetone	125	109		ug/L		87	70 - 130	7	20

Method: 8260C - Volatile Organic Compounds (GC/MS) (Continued)

Lab Sample ID: LCSD 480-108596/5
Matrix: Water
Analysis Batch: 108596

Client Sample ID: Lab Control Sample Dup
Prep Type: Total/NA

Analyte	Spike Added	LCSD Result	LCSD Qualifier	Unit	D	%Rec	%Rec. Limits	RPD	RPD Limit
Benzene	25.0	23.2		ug/L		93	70 - 130	1	20
Bromobenzene	25.0	23.7		ug/L		95	70 - 130	0	20
Bromoform	25.0	24.2		ug/L		97	70 - 130	0	20
Bromomethane	25.0	26.3		ug/L		105	70 - 130	20	20
Carbon disulfide	25.0	21.1		ug/L		84	70 - 130	1	20
Carbon tetrachloride	25.0	22.2		ug/L		89	70 - 130	1	20
Chlorobenzene	25.0	23.4		ug/L		94	70 - 130	1	20
Chlorobromomethane	25.0	25.2		ug/L		101	70 - 130	1	20
Chlorodibromomethane	25.0	24.2		ug/L		97	70 - 130	0	20
Chloroethane	25.0	23.3		ug/L		93	70 - 130	4	20
Chloroform	25.0	22.9		ug/L		92	70 - 130	2	20
Chloromethane	25.0	23.0		ug/L		92	70 - 130	1	20
cis-1,2-Dichloroethene	25.0	23.8		ug/L		95	70 - 130	3	20
cis-1,3-Dichloropropene	25.0	24.4		ug/L		98	70 - 130	0	20
Dichlorobromomethane	25.0	23.4		ug/L		94	70 - 130	1	20
Dichlorodifluoromethane	50.0	51.8		ug/L		104	70 - 130	2	20
Ethyl ether	25.0	25.0		ug/L		100	70 - 130	2	20
Ethylbenzene	25.0	22.8		ug/L		91	70 - 130	1	20
Ethylene Dibromide	25.0	23.7		ug/L		95	70 - 130	2	20
Hexachlorobutadiene	25.0	23.5		ug/L		94	70 - 130	1	20
Isopropyl ether	25.0	24.8		ug/L		99	70 - 130	2	20
Isopropylbenzene	25.0	22.8		ug/L		91	70 - 130	1	20
Methyl tert-butyl ether	25.0	23.3		ug/L		93	70 - 130	0	20
Methylene Chloride	25.0	22.6		ug/L		90	70 - 130	1	20
m-Xylene & p-Xylene	50.0	46.2		ug/L		92	70 - 130	3	20
Naphthalene	25.0	24.0		ug/L		96	70 - 130	3	20
n-Butylbenzene	25.0	22.5		ug/L		90	70 - 130	3	20
N-Propylbenzene	25.0	22.6		ug/L		90	70 - 130	1	20
o-Xylene	25.0	23.5		ug/L		94	70 - 130	2	20
sec-Butylbenzene	25.0	23.2		ug/L		93	70 - 130	0	20
Styrene	25.0	23.3		ug/L		93	70 - 130	2	20
Tert-amyl methyl ether	25.0	24.9		ug/L		99	70 - 130	1	20
Tert-butyl ethyl ether	25.0	24.5		ug/L		98	70 - 130	0	20
tert-Butylbenzene	25.0	23.4		ug/L		94	70 - 130	2	20
Tetrachloroethene	25.0	24.5		ug/L		98	70 - 130	3	20
Tetrahydrofuran	125	114		ug/L		91	70 - 130	4	20
Toluene	25.0	22.9		ug/L		91	70 - 130	3	20
trans-1,2-Dichloroethene	25.0	24.0		ug/L		96	70 - 130	0	20
trans-1,3-Dichloropropene	25.0	23.2		ug/L		93	70 - 130	0	20
Trichloroethene	25.0	23.7		ug/L		95	70 - 130	2	20
Trichlorofluoromethane	25.0	24.0		ug/L		96	70 - 130	2	20
Vinyl chloride	25.0	22.4		ug/L		90	70 - 130	0	20
Dibromomethane	25.0	24.4		ug/L		98	70 - 130	0	20

Surrogate	*LCSD %Recovery*	*LCSD Qualifier*	*Limits*
Toluene-d8 (Surr)	*98*		*70 - 130*
1,2-Dichloroethane-d4 (Surr)	*94*		*70 - 130*
4-Bromofluorobenzene (Surr)	*102*		*70 - 130*

Method: 522 MOD - 1,4 Dioxane (GC/MS SIM)

Lab Sample ID: MB 200-53504/1-A
Matrix: Water
Analysis Batch: 53519

Client Sample ID: Method Blank
Prep Type: Total/NA
Prep Batch: 53504

Analyte	MB Result	MB Qualifier	RL	MDL	Unit	D	Prepared	Analyzed	Dil Fac
1,4-Dioxane	ND		0.20		ug/L		03/27/13 14:05	03/27/13 18:12	1

Surrogate	*MB %Recovery*	*MB Qualifier*	*Limits*	*Prepared*	*Analyzed*	*Dil Fac*
1,4-Dioxane-d8 (Surr)	*79*		*70 - 130*	*03/27/13 14:05*	*03/27/13 18:12*	*1*

Lab Sample ID: LCS 200-53504/2-A
Matrix: Water
Analysis Batch: 53519

Client Sample ID: Lab Control Sample
Prep Type: Total/NA
Prep Batch: 53504

Analyte			Spike Added	LCS Result	LCS Qualifier	Unit	D	%Rec	%Rec. Limits		
1,4-Dioxane			8.00	6.67		ug/L		83	70 - 130		

Surrogate	*LCS %Recovery*	*LCS Qualifier*	*Limits*
1,4-Dioxane-d8 (Surr)	*84*		*70 - 130*

QC Association Summary

Client: ERM-Northeast
Project/Site: IDS Wayland

TestAmerica Job ID: 480-34733-1

GC/MS VOA

Analysis Batch: 108441

Lab Sample ID	Client Sample ID	Prep Type	Matrix	Method	Prep Batch
480-34733-7	MW1022-20130320-01	Total/NA	Water	8260C	
480-34733-8	MW1023-20130320-01	Total/NA	Water	8260C	
480-34733-9	DUP003-20130320-01	Total/NA	Water	8260C	
480-34733-10	MW1033-20130320-01	Total/NA	Water	8260C	
480-34733-11	MW1034-20130320-01	Total/NA	Water	8260C	
480-34733-12	DUP002-20130320-01	Total/NA	Water	8260C	
480-34733-13	MW1028-20130320-01	Total/NA	Water	8260C	
LCS 480-108441/4	Lab Control Sample	Total/NA	Water	8260C	
LCSD 480-108441/5	Lab Control Sample Dup	Total/NA	Water	8260C	
MB 480-108441/7	Method Blank	Total/NA	Water	8260C	

Analysis Batch: 108444

Lab Sample ID	Client Sample ID	Prep Type	Matrix	Method	Prep Batch
480-34733-1	MW1010M-20130320-01	Total/NA	Water	8260C	
480-34733-2	MW1010D-20130320-01	Total/NA	Water	8260C	
480-34733-3	MW1006-20130320-01	Total/NA	Water	8260C	
480-34733-4	MW1030-20130320-01	Total/NA	Water	8260C	
480-34733-5	MW1015D-20130320-01	Total/NA	Water	8260C	
480-34733-6	MW1025M-20130320-01	Total/NA	Water	8260C	
LCS 480-108444/4	Lab Control Sample	Total/NA	Water	8260C	
LCSD 480-108444/5	Lab Control Sample Dup	Total/NA	Water	8260C	
MB 480-108444/7	Method Blank	Total/NA	Water	8260C	

Analysis Batch: 108596

Lab Sample ID	Client Sample ID	Prep Type	Matrix	Method	Prep Batch
480-34733-6 - DL	MW1025M-20130320-01	Total/NA	Water	8260C	
480-34733-14	MW1027-20130320-01	Total/NA	Water	8260C	
480-34733-15	TB001-20130320-01	Total/NA	Water	8260C	
LCS 480-108596/4	Lab Control Sample	Total/NA	Water	8260C	
LCSD 480-108596/5	Lab Control Sample Dup	Total/NA	Water	8260C	
MB 480-108596/7	Method Blank	Total/NA	Water	8260C	

Analysis Batch: 108998

Lab Sample ID	Client Sample ID	Prep Type	Matrix	Method	Prep Batch
480-34733-6	MW1025M-20130320-01	Total/NA	Water	8260B SIM	
480-34733-7	MW1022-20130320-01	Total/NA	Water	8260B SIM	
480-34733-8	MW1023-20130320-01	Total/NA	Water	8260B SIM	
480-34733-10	MW1033-20130320-01	Total/NA	Water	8260B SIM	
480-34733-11	MW1034-20130320-01	Total/NA	Water	8260B SIM	
LCS 480-108998/3	Lab Control Sample	Total/NA	Water	8260B SIM	
LCSD 480-108998/4	Lab Control Sample Dup	Total/NA	Water	8260B SIM	
MB 480-108998/5	Method Blank	Total/NA	Water	8260B SIM	

GC/MS Semi VOA

Prep Batch: 53504

Lab Sample ID	Client Sample ID	Prep Type	Matrix	Method	Prep Batch
480-34733-7	MW1022-20130320-01	Total/NA	Water	3535A	
480-34733-8	MW1023-20130320-01	Total/NA	Water	3535A	
480-34733-10	MW1033-20130320-01	Total/NA	Water	3535A	

GC/MS Semi VOA (Continued)

Prep Batch: 53504 (Continued)

Lab Sample ID	Client Sample ID	Prep Type	Matrix	Method	Prep Batch
480-34733-11	MW1034-20130320-01	Total/NA	Water	3535A	
LCS 200-53504/2-A	Lab Control Sample	Total/NA	Water	3535A	
MB 200-53504/1-A	Method Blank	Total/NA	Water	3535A	

Analysis Batch: 53519

Lab Sample ID	Client Sample ID	Prep Type	Matrix	Method	Prep Batch
480-34733-7	MW1022-20130320-01	Total/NA	Water	522 MOD	53504
480-34733-8	MW1023-20130320-01	Total/NA	Water	522 MOD	53504
480-34733-10	MW1033-20130320-01	Total/NA	Water	522 MOD	53504
480-34733-11	MW1034-20130320-01	Total/NA	Water	522 MOD	53504
LCS 200-53504/2-A	Lab Control Sample	Total/NA	Water	522 MOD	53504
MB 200-53504/1-A	Method Blank	Total/NA	Water	522 MOD	53504

Lab Chronicle

Client: ERM-Northeast
Project/Site: IDS Wayland

TestAmerica Job ID: 480-34733-1

Client Sample ID: MW1010M-20130320-01 — Lab Sample ID: 480-34733-1

Date Collected: 03/20/13 11:30 — **Matrix: Water**
Date Received: 03/21/13 07:24

Prep Type	Batch Type	Batch Method	Run	Dilution Factor	Batch Number	Prepared or Analyzed	Analyst	Lab
Total/NA	Analysis	8260C		1	108444	03/21/13 16:41	LH	TAL BUF

Client Sample ID: MW1010D-20130320-01 — Lab Sample ID: 480-34733-2

Date Collected: 03/20/13 12:45 — **Matrix: Water**
Date Received: 03/21/13 07:24

Prep Type	Batch Type	Batch Method	Run	Dilution Factor	Batch Number	Prepared or Analyzed	Analyst	Lab
Total/NA	Analysis	8260C		1	108444	03/21/13 17:05	LH	TAL BUF

Client Sample ID: MW1006-20130320-01 — Lab Sample ID: 480-34733-3

Date Collected: 03/20/13 14:00 — **Matrix: Water**
Date Received: 03/21/13 07:24

Prep Type	Batch Type	Batch Method	Run	Dilution Factor	Batch Number	Prepared or Analyzed	Analyst	Lab
Total/NA	Analysis	8260C		1	108444	03/21/13 17:29	LH	TAL BUF

Client Sample ID: MW1030-20130320-01 — Lab Sample ID: 480-34733-4

Date Collected: 03/20/13 15:00 — **Matrix: Water**
Date Received: 03/21/13 07:24

Prep Type	Batch Type	Batch Method	Run	Dilution Factor	Batch Number	Prepared or Analyzed	Analyst	Lab
Total/NA	Analysis	8260C		1	108444	03/21/13 17:52	LH	TAL BUF

Client Sample ID: MW1015D-20130320-01 — Lab Sample ID: 480-34733-5

Date Collected: 03/20/13 12:10 — **Matrix: Water**
Date Received: 03/21/13 07:24

Prep Type	Batch Type	Batch Method	Run	Dilution Factor	Batch Number	Prepared or Analyzed	Analyst	Lab
Total/NA	Analysis	8260C		1	108444	03/21/13 18:16	LH	TAL BUF

Client Sample ID: MW1025M-20130320-01 — Lab Sample ID: 480-34733-6

Date Collected: 03/20/13 14:40 — **Matrix: Water**
Date Received: 03/21/13 07:24

Prep Type	Batch Type	Batch Method	Run	Dilution Factor	Batch Number	Prepared or Analyzed	Analyst	Lab
Total/NA	Analysis	8260C		1	108444	03/21/13 18:40	LH	TAL BUF
Total/NA	Analysis	8260C	DL	4	108596	03/22/13 02:36	LH	TAL BUF
Total/NA	Analysis	8260B SIM		1	108998	03/25/13 13:37	TRB	TAL BUF

Lab Chronicle

Client: ERM-Northeast
Project/Site: IDS Wayland

TestAmerica Job ID: 480-34733-1

Client Sample ID: MW1022-20130320-01 — Lab Sample ID: 480-34733-7

Date Collected: 03/20/13 13:00 — **Matrix: Water**
Date Received: 03/21/13 07:24

Prep Type	Batch Type	Batch Method	Run	Dilution Factor	Batch Number	Prepared or Analyzed	Analyst	Lab
Total/NA	Analysis	8260C		1	108441	03/21/13 17:42	RL	TAL BUF
Total/NA	Analysis	8260B SIM		1	108998	03/25/13 14:02	TRB	TAL BUF
Total/NA	Prep	3535A			53504	03/27/13 14:05	JAB	TAL BUR
Total/NA	Analysis	522 MOD		1	53519	03/27/13 18:58	RJH	TAL BUR

Client Sample ID: MW1023-20130320-01 — Lab Sample ID: 480-34733-8

Date Collected: 03/20/13 15:10 — **Matrix: Water**
Date Received: 03/21/13 07:24

Prep Type	Batch Type	Batch Method	Run	Dilution Factor	Batch Number	Prepared or Analyzed	Analyst	Lab
Total/NA	Analysis	8260C		1	108441	03/21/13 18:08	RL	TAL BUF
Total/NA	Analysis	8260B SIM		1	108998	03/25/13 14:26	TRB	TAL BUF
Total/NA	Prep	3535A			53504	03/27/13 14:05	JAB	TAL BUR
Total/NA	Analysis	522 MOD		1	53519	03/27/13 19:14	RJH	TAL BUR

Client Sample ID: DUP003-20130320-01 — Lab Sample ID: 480-34733-9

Date Collected: 03/20/13 14:14 — **Matrix: Water**
Date Received: 03/21/13 07:24

Prep Type	Batch Type	Batch Method	Run	Dilution Factor	Batch Number	Prepared or Analyzed	Analyst	Lab
Total/NA	Analysis	8260C		1	108441	03/21/13 18:33	RL	TAL BUF

Client Sample ID: MW1033-20130320-01 — Lab Sample ID: 480-34733-10

Date Collected: 03/20/13 12:25 — **Matrix: Water**
Date Received: 03/21/13 07:24

Prep Type	Batch Type	Batch Method	Run	Dilution Factor	Batch Number	Prepared or Analyzed	Analyst	Lab
Total/NA	Analysis	8260C		1	108441	03/21/13 18:58	RL	TAL BUF
Total/NA	Analysis	8260B SIM		1	108998	03/25/13 14:50	TRB	TAL BUF
Total/NA	Prep	3535A			53504	03/27/13 14:05	JAB	TAL BUR
Total/NA	Analysis	522 MOD		1	53519	03/27/13 19:30	RJH	TAL BUR

Client Sample ID: MW1034-20130320-01 — Lab Sample ID: 480-34733-11

Date Collected: 03/20/13 11:15 — **Matrix: Water**
Date Received: 03/21/13 07:24

Prep Type	Batch Type	Batch Method	Run	Dilution Factor	Batch Number	Prepared or Analyzed	Analyst	Lab
Total/NA	Analysis	8260C		1	108441	03/21/13 19:23	RL	TAL BUF
Total/NA	Analysis	8260B SIM		1	108998	03/25/13 15:14	TRB	TAL BUF
Total/NA	Prep	3535A			53504	03/27/13 14:05	JAB	TAL BUR
Total/NA	Analysis	522 MOD		1	53519	03/27/13 19:45	RJH	TAL BUR

Lab Chronicle

Client: ERM-Northeast
Project/Site: IDS Wayland

TestAmerica Job ID: 480-34733-1

Client Sample ID: DUP002-20130320-01 — Lab Sample ID: 480-34733-12

Date Collected: 03/20/13 11:11 — **Matrix: Water**
Date Received: 03/21/13 07:24

Prep Type	Batch Type	Batch Method	Run	Dilution Factor	Batch Number	Prepared or Analyzed	Analyst	Lab
Total/NA	Analysis	8260C		1	108441	03/21/13 19:49	RL	TAL BUF

Client Sample ID: MW1028-20130320-01 — Lab Sample ID: 480-34733-13

Date Collected: 03/20/13 14:00 — **Matrix: Water**
Date Received: 03/21/13 07:24

Prep Type	Batch Type	Batch Method	Run	Dilution Factor	Batch Number	Prepared or Analyzed	Analyst	Lab
Total/NA	Analysis	8260C		1	108441	03/21/13 20:14	RL	TAL BUF

Client Sample ID: MW1027-20130320-01 — Lab Sample ID: 480-34733-14

Date Collected: 03/20/13 15:05 — **Matrix: Water**
Date Received: 03/21/13 07:24

Prep Type	Batch Type	Batch Method	Run	Dilution Factor	Batch Number	Prepared or Analyzed	Analyst	Lab
Total/NA	Analysis	8260C		1	108596	03/22/13 03:00	LH	TAL BUF

Client Sample ID: TB001-20130320-01 — Lab Sample ID: 480-34733-15

Date Collected: 03/20/13 13:13 — **Matrix: Water**
Date Received: 03/21/13 07:24

Prep Type	Batch Type	Batch Method	Run	Dilution Factor	Batch Number	Prepared or Analyzed	Analyst	Lab
Total/NA	Analysis	8260C		1	108596	03/22/13 03:23	LH	TAL BUF

Laboratory References:

TAL BUF = TestAmerica Buffalo, 10 Hazelwood Drive, Amherst, NY 14228-2298, TEL (716)691-2600

TAL BUR = TestAmerica Burlington, 30 Community Drive, Suite 11, South Burlington, VT 05403, TEL (802)660-1990

Certification Summary

Client: ERM-Northeast
Project/Site: IDS Wayland

TestAmerica Job ID: 480-34733-1

Laboratory: TestAmerica Buffalo

All certifications held by this laboratory are listed. Not all certifications are applicable to this report.

Authority	Program	EPA Region	Certification ID	Expiration Date
Arkansas DEQ	State Program	6	88-0686	07-06-13
California	NELAP	9	1169CA	09-30-13
Connecticut	State Program	1	PH-0568	09-30-14
Florida	NELAP	4	E87672	06-30-13
Georgia	State Program	4	N/A	03-31-13
Georgia	State Program	4	956	06-30-13
Georgia	State Program	4	956	06-30-13
Illinois	NELAP	5	200003	09-30-13
Iowa	State Program	7	374	03-01-13
Kansas	NELAP	7	E-10187	01-31-14
Kentucky	State Program	4	90029	12-31-13
Kentucky (UST)	State Program	4	30	04-01-13
Louisiana	NELAP	6	02031	06-30-13
Maine	State Program	1	NY00044	12-04-13
Maryland	State Program	3	294	03-31-13
Massachusetts	State Program	1	M-NY044	06-30-13
Michigan	State Program	5	9937	04-01-13
Minnesota	NELAP	5	036-999-337	12-31-13
New Hampshire	NELAP	1	2973	09-11-13
New Hampshire	NELAP	1	2337	11-17-13
New Jersey	NELAP	2	NY455	06-30-13
New York	NELAP	2	10026	03-31-13
North Dakota	State Program	8	R-176	03-31-13
Oklahoma	State Program	6	9421	08-31-13
Oregon	NELAP	10	NY200003	06-09-13
Pennsylvania	NELAP	3	68-00281	07-31-13
Rhode Island	State Program	1	LAO00328	12-31-13
Tennessee	State Program	4	TN02970	04-01-13
Texas	NELAP	6	T104704412-11-2	07-31-13
USDA	Federal		P330-11-00386	11-22-14
Virginia	NELAP	3	460185	09-14-13
Washington	State Program	10	C784	02-10-14
West Virginia DEP	State Program	3	252	09-30-13
Wisconsin	State Program	5	998310390	08-31-13

Laboratory: TestAmerica Burlington

All certifications held by this laboratory are listed. Not all certifications are applicable to this report.

Authority	Program	EPA Region	Certification ID	Expiration Date
Connecticut	State Program	1	PH-0751	09-30-13
DE Haz. Subst. Cleanup Act (HSCA)	State Program	3	NA	02-13-15
Florida	NELAP	4	E87467	06-30-13
L-A-B	DoD ELAP		L2336	10-26-13
Louisiana	NELAP	6	176292	06-30-13
Maine	State Program	1	VT00008	04-17-13
Minnesota	NELAP	5	050-999-436	12-31-13
New Hampshire	NELAP	1	200610	12-18-13
New Jersey	NELAP	2	VT972	06-30-13
New York	NELAP	2	10391	04-01-13
Pennsylvania	NELAP	3	68-00489	04-30-13
Rhode Island	State Program	1	LAO00298	12-30-13
USDA	Federal		P330-11-00093	02-17-14

Laboratory: TestAmerica Burlington (Continued)

All certifications held by this laboratory are listed. Not all certifications are applicable to this report.

Authority	Program	EPA Region	Certification ID	Expiration Date
Vermont	State Program	1	VT-4000	12-31-13
Virginia	NELAP	3	460209	12-14-13

Method Summary

Client: ERM-Northeast
Project/Site: IDS Wayland

TestAmerica Job ID: 480-34733-1

Method	Method Description	Protocol	Laboratory
8260B SIM	Volatile Organic Compounds (GC/MS)	SW846	TAL BUF
8260C	Volatile Organic Compounds (GC/MS)	MA DEP	TAL BUF
522 MOD	1,4 Dioxane (GC/MS SIM)	EPA	TAL BUR

Protocol References:

EPA = US Environmental Protection Agency

MA DEP = Massachusetts Department Of Environmental Protection

SW846 = "Test Methods For Evaluating Solid Waste, Physical/Chemical Methods", Third Edition, November 1986 And Its Updates.

Laboratory References:

TAL BUF = TestAmerica Buffalo, 10 Hazelwood Drive, Amherst, NY 14228-2298, TEL (716)691-2600

TAL BUR = TestAmerica Burlington, 30 Community Drive, Suite 11, South Burlington, VT 05403, TEL (802)660-1990

Sample Summary

Client: ERM-Northeast
Project/Site: IDS Wayland

TestAmerica Job ID: 480-34733-1

Lab Sample ID	Client Sample ID	Matrix	Collected	Received
480-34733-1	MW1010M-20130320-01	Water	03/20/13 11:30	03/21/13 07:24
480-34733-2	MW1010D-20130320-01	Water	03/20/13 12:45	03/21/13 07:24
480-34733-3	MW1006-20130320-01	Water	03/20/13 14:00	03/21/13 07:24
480-34733-4	MW1030-20130320-01	Water	03/20/13 15:00	03/21/13 07:24
480-34733-5	MW1015D-20130320-01	Water	03/20/13 12:10	03/21/13 07:24
480-34733-6	MW1025M-20130320-01	Water	03/20/13 14:40	03/21/13 07:24
480-34733-7	MW1022-20130320-01	Water	03/20/13 13:00	03/21/13 07:24
480-34733-8	MW1023-20130320-01	Water	03/20/13 15:10	03/21/13 07:24
480-34733-9	DUP003-20130320-01	Water	03/20/13 14:14	03/21/13 07:24
480-34733-10	MW1033-20130320-01	Water	03/20/13 12:25	03/21/13 07:24
480-34733-11	MW1034-20130320-01	Water	03/20/13 11:15	03/21/13 07:24
480-34733-12	DUP002-20130320-01	Water	03/20/13 11:11	03/21/13 07:24
480-34733-13	MW1028-20130320-01	Water	03/20/13 14:00	03/21/13 07:24
480-34733-14	MW1027-20130320-01	Water	03/20/13 15:05	03/21/13 07:24
480-34733-15	TB001-20130320-01	Water	03/20/13 13:13	03/21/13 07:24

Login Sample Receipt Checklist

Client: ERM-Northeast

Job Number: 480-34733-1

Login Number: 34733
List Number: 1
Creator: Kolb, Chris M

List Source: TestAmerica Buffalo

Question	Answer	Comment
Radioactivity either was not measured or, if measured, is at or below background	N/A	
The cooler's custody seal, if present, is intact.	True	
The cooler or samples do not appear to have been compromised or tampered with.	True	
Samples were received on ice.	True	
Cooler Temperature is acceptable.	True	
Cooler Temperature is recorded.	True	
COC is present.	True	
COC is filled out in ink and legible.	True	
COC is filled out with all pertinent information.	True	
Is the Field Sampler's name present on COC?	True	
There are no discrepancies between the sample IDs on the containers and the COC.	True	
Samples are received within Holding Time.	True	
Sample containers have legible labels.	True	
Containers are not broken or leaking.	True	
Sample collection date/times are provided.	True	
Appropriate sample containers are used.	True	
Sample bottles are completely filled.	True	
Sample Preservation Verified	True	
There is sufficient vol. for all requested analyses, incl. any requested MS/MSDs	True	
VOA sample vials do not have headspace or bubble is <6mm (1/4") in diameter.	True	
If necessary, staff have been informed of any short hold time or quick TAT needs	True	
Multiphasic samples are not present.	True	
Samples do not require splitting or compositing.	True	
Sampling Company provided.	True	
Samples received within 48 hours of sampling.	True	
Samples requiring field filtration have been filtered in the field.	True	
Chlorine Residual checked.	N/A	

Login Sample Receipt Checklist

Client: ERM-Northeast

Job Number: 480-34733-1

Login Number: 34733
List Number: 1
Creator: Gagne, Eric

List Source: TestAmerica Burlington
List Creation: 03/22/13 12:35 PM

Question	Answer	Comment
Radioactivity wasn't checked or is </= background as measured by a survey meter.	N/A	Lab does not accept radioactive samples.
The cooler's custody seal, if present, is intact.	True	587249
Sample custody seals, if present, are intact.	True	
The cooler or samples do not appear to have been compromised or tampered with.	True	
Samples were received on ice.	True	
Cooler Temperature is acceptable.	True	
Cooler Temperature is recorded.	True	4.2ºC IR GUN ID 181. CF 0
COC is present.	True	
COC is filled out in ink and legible.	True	
COC is filled out with all pertinent information.	True	
Is the Field Sampler's name present on COC?	True	
There are no discrepancies between the containers received and the COC.	True	
Samples are received within Holding Time.	True	
Sample containers have legible labels.	True	
Containers are not broken or leaking.	False	Refer to Job Narrative for details.
Sample collection date/times are provided.	True	
Appropriate sample containers are used.	True	
Sample bottles are completely filled.	True	
Sample Preservation Verified.	True	
There is sufficient vol. for all requested analyses, incl. any requested MS/MSDs	True	
Containers requiring zero headspace have no headspace or bubble is <6mm (1/4").	True	
Multiphasic samples are not present.	True	
Samples do not require splitting or compositing.	True	
Residual Chlorine Checked.	N/A	

TestAmerica Westfield
Westfield Executive Park 53 Southampton Road
Westfield, MA 01085
Phone (413) 572-4000 Fax (413) 572-3707

Boston Service Center
240 Bear Hill Rd. Suite 104
Waltham, MA 02451
Phone (781) 466-6900 Fax (781) 466-6901

Chain of Custody Record

TestAmerica
THE LEADER IN ENVIRONMENTAL TESTING

Client Information	Sampler: Stacey Braga	Lab PM:	Carrier Tracking No(s):	COC No: 22857
Client Contact: Jason Flattery	Phone: 978-875-0426	E-Mail:		Page: 1/2
Company: ERM				Job #: 480-34733
Address: 1 Beacon St, 5th Floor	Due Date Requested:			
City: Boston	TAT Requested (days):			
State, Zip: MA 02108				
Phone: 1-617-447-0757	Quote #:			
Email: Jason.Flattery.com	PO #:			
Project Name/number: Raytheon Wayland 0167058	WO #:			
Site: Wayland	SSOW#:			

Analysis Requested

Preservation Codes:
A - HCL, B - NaOH, C - Zn Acetate, D - Nitric Acid, E - NaHSO4, F - MeOH, H - Ascorbic Acid, I - Ice, J - DI Water, M - Hexane, N - None, P - Na2O4S, Q - Na2SO3, R - Na2S2SO3, S - H2SO4, Z - other (specify)

Regulatory programs:
MCP [X] GW1/S1 [ ]
RCP [ ] CT RSR [ ]
DEP Form [ ] EDD Required [ ]

Sample Identification	Sample Date	Sample Time	Sample Type (C=comp, G=grab)	Matrix (W=water, S=solid, O=waste/oil, BT=Tissue, A=Air)	Sampler's Initials	Field Filtered Sample?	Perform MS/MSD?	8260MCP	8260 SIM 1-4, Dioxane	522 1,4-Dioxane	Total Number of containers	Special Instructions/Note:
			Preservation Code:									
MW1010M-20130320-01	3/20/13	11:30		W	CC			3				Preserved with ascorbic acid (7 day hold time)
MW1010D-20130320-01	3/20/13	12:45		W	CC			3				
MW1006-20130320-01	3/20/13	14:00		W	CC			3				
MW1030-20130320-01	3/20/13	15:00		W	CC			3				
MW1015D-20130320-01	3/20/13	12:10		W	SB			3				
MW1025M-20130320-01	3/20/13	14:40 ~~13:40~~		W	SB			3	2	1		522 to be run after SIM
MW1022-20130320-01	3/20/13	13:00		W	BM			3	2	1		522 to be run after SIM
MW1023-20130320-01	3/20/13	15:10		W	BM			3	2	1		522 to be run after SIM
DUP 003-20130320-01	3/20/13	14:14		W	BM			3				
MW1033-20130320-01	3/20/13	12:25		W	SC			3	2	1		522 to be run after SIM

Possible Hazard Identification
[X] Non-Hazard [ ] Flammable [ ] Skin Irritant [ ] Poison B [ ] Unknown [ ] Radiological

Sample Disposal (A fee may be assessed if samples are retained longer than 1 month)
[ ] Return To Client [ ] Disposal By Lab [ ] Archive For ____ Months

Deliverable Requested: I, II, III, IV, Other (specify)

Special Instructions/QC Requirements:

Relinquished by:	Date/Time:	Company	Received by:	Date/Time:	Company
[signature]	3/20/13 15:50	ERM	[signature]	3/20/13 1550	TAC
[signature]	3/20/13 1632	TAC	[signature]	03/21/13 0100	TA
Relinquished by:	Date/Time:	Company	Received by:	Date/Time:	Company

Custody Seals Intact: Δ Yes Δ No
Custody Seal No.:
Cooler Temperature(s) °C and Other Remarks: 2.3 ICE #1

TAL-8245-360 1111

TestAmerica Westfield
Westfield Executive Park 53 Southampton Road
Westfield, MA 01085
Phone (413) 572-4000 Fax (413) 572-3707

Boston Service Center
240 Bear Hill Rd. Suite 104
Waltham, MA 02451
Phone (781) 466-6900 Fax (781) 466-6901

Chain of Custody Record

TestAmerica
THE LEADER IN ENVIRONMENTAL TESTING

Client Information
Client Contact: Jason Flattery
Company: ERM
Address: 1 Beacon St, 5th Floor
City: Boston
State, Zip: MA 02108
Phone: 1-617-447-0757
Email: Jason.Flattery.com
Project Name/number: Raytheon Wayland 0167058
Site: Wayland

Sampler: Stacey Bragg
Phone: 978-875-0426
Lab PM:
E-Mail:
Carrier Tracking No(s):
COC No: 22867
Page: 2/2
Job #:

Due Date Requested:
TAT Requested (days):
Quote #:
PO #:
WO #:
SSOW#:

Analysis Requested

Preservation Codes:
A - HCL, B - NaOH, C - Zn Acetate, D - Nitric Acid, E - NaHSO4, F - MeOH, H - Ascorbic Acid, I - Ice, J - DI Water, M - Hexane, N - None, P - Na2O4S, Q - Na2SO3, R - Na2S2SO3, S - H2SO4, Z - other (specify)

Regulatory programs:
MCP ☑ GW1/S1 ☐
RCP ☐ CT RSR ☐
DEP Form ☐ EDD Required ☐

Sample Identification	Sample Date	Sample Time	Sample Type (C=Comp, G=grab)	Matrix (W=water, S=solid, O=waste/oil, BT=Tissue, A=Air)	Sampler's Initials	Field Filtered Sample?	Perform MS/MSD?	8260 MCP	8260 JIM 1,4-Dioxane	522 1,4-Dioxane	Total Number of containers	Special Instructions/Note:
			Preservation Code:									
MW1034-20130320-01	3/20/13	11:15		W	SC			3	2	1		
DUP002-20130320-01	3/20/13	11:11		W	SC			3				
MW1028-20130320-01	3/20/13	14:00		W	SC			3				
MW1027-20130320-01	3/20/13	15:05		W	SC			3				
TB001-20130320-01	3/20/13	13:13		W				2				

Possible Hazard Identification
☐ Non-Hazard ☐ Flammable ☐ Skin Irritant ☐ Poison B ☐ Unknown ☐ Radiological

Sample Disposal (A fee may be assessed if samples are retained longer than 1 month)
☐ Return To Client ☐ Disposal By Lab ☐ Archive For _____ Months

Deliverable Requested: I, II, III, IV, Other (specify)

Special Instructions/QC Requirements:

Relinquished by:	Date/Time:	Company	Received by:	Date/Time:	Company
[signature]	3/20/13 1550	ERM	[signature]	3/20/13 1550	TAL
[signature]	3/20/13 1638	TAL	[signature]	03/21/13 0100	

Custody Seals Intact: Δ Yes Δ No
Custody Seal No.:
Cooler Temperature(s) °C and Other Remarks: 2.3 ICE #1

TAL-8245-360 1111

Page 87 of 97

3/26/2013

TestAmerica

THE LEADER IN ENVIRONMENTAL TESTING

ANALYTICAL REPORT

TestAmerica Laboratories, Inc.
TestAmerica Buffalo
10 Hazelwood Drive
Amherst, NY 14228-2298
Tel: (716)691-2600

TestAmerica Job ID: 480-34804-1
Client Project/Site: IDS Wayland

For:
ERM-Northeast
One Beacon Steet
5th Floor
Boston, Massachusetts 02108

Attn: Jason Flattery

Authorized for release by:
3/29/2013 4:07:44 PM
Brian Fischer
Project Manager II
brian.fischer@testamericainc.com

Designee for

Becky Mason
Project Manager II
becky.mason@testamericainc.com

LINKS

Review your project results through TotalAccess

Have a Question? Ask The Expert

Visit us at: www.testamericainc.com

The test results in this report meet all 2003 NELAC and 2009 TNI requirements for accredited parameters, exceptions are noted in this report. This report may not be reproduced except in full, and with written approval from the laboratory. For questions please contact the Project Manager at the e-mail address or telephone number listed on this page.

This report has been electronically signed and authorized by the signatory. Electronic signature is intended to be the legally binding equivalent of a traditionally handwritten signature.

Results relate only to the items tested and the sample(s) as received by the laboratory.

Table of Contents

Cover Page 1
Table of Contents 2
Definitions/Glossary 3
Case Narrative 4
Detection Summary 6
Client Sample Results 7
Surrogate Summary 13
QC Sample Results 14
QC Association Summary 24
Lab Chronicle 25
Certification Summary 26
Method Summary 27
Sample Summary 28
Receipt Checklists 29
Chain of Custody 30

Definitions/Glossary

Client: ERM-Northeast
Project/Site: IDS Wayland

TestAmerica Job ID: 480-34804-1

Qualifiers

GC/MS VOA

Qualifier	Qualifier Description
*	LCS or LCSD exceeds the control limits

Glossary

Abbreviation	These commonly used abbreviations may or may not be present in this report.
¤	Listed under the "D" column to designate that the result is reported on a dry weight basis
%R	Percent Recovery
CNF	Contains no Free Liquid
DER	Duplicate error ratio (normalized absolute difference)
DL, RA, RE, IN	Indicates a Dilution, Re-analysis, Re-extraction, or additional Initial metals/anion analysis of the sample
DLC	Decision level concentration
MDA	Minimum detectable activity
EDL	Estimated Detection Limit
MDC	Minimum detectable concentration
MDL	Method Detection Limit
ML	Minimum Level (Dioxin)
ND	Not detected at the reporting limit (or MDL or EDL if shown)
PQL	Practical Quantitation Limit
QC	Quality Control
RER	Relative error ratio
RL	Reporting Limit or Requested Limit (Radiochemistry)
RPD	Relative Percent Difference, a measure of the relative difference between two points
TEF	Toxicity Equivalent Factor (Dioxin)
TEQ	Toxicity Equivalent Quotient (Dioxin)

Job ID: 480-34804-1

Laboratory: TestAmerica Buffalo

Narrative

Job Narrative
480-34804-1

With the exceptions noted as flags or footnotes, standard analytical protocols were followed in the analysis of the samples and no problems were encountered or anomalies observed. In addition all laboratory quality control samples were within established control limits, with any exceptions noted below. Each sample was analyzed to achieve the lowest possible reporting limit within the constraints of the method. In some cases, due to interference or analytes present at high concentrations, samples were diluted. For diluted samples, the reporting limits are adjusted relative to the dilution required.

Calculations are performed before rounding to avoid round-off errors in calculated results.

All holding times were met and proper preservation noted for the methods performed on these samples, unless otherwise detailed in the individual sections below.

TestAmerica's Reporting Limits (RLs) for this report may not always meet client specified method reporting limits due to various reasons such as methodology, dilutions, matrix or moisture content (soils). TestAmerica's pivot table EDD documents which compound(s) exceed certain regulatory standards. If not included with your deliverables, please contact your Project Manager about the availability of this EDD for your report.

Receipt
The samples were received on 3/22/2013 12:30 PM; the samples arrived in good condition, properly preserved and, where required, on ice. The temperature of the cooler at receipt was 0.8º C.

Note: All samples that require thermal preservation are considered acceptable if the arrival temperature is within the method's specified temperature range or for general analysis, ranging from 6°C to just above the freezing temperature of water. Samples that are hand delivered, immediately following collection, may not meet these criteria; however, they will be considered acceptable according to NELAC and State standards, if there is evidence that the chilling process has begun, such as stored and transported to the laboratory on ice

GC/MS VOA
Method(s) 8260C: The continuing calibration verification (CCV) for Bromoform associated with batch 108684 recovered above the MCP upper control limit. MCP protocol allows for 20% of the target compounds to be outside the 20% difference but not over 40% difference.

Method(s) 8260C: The laboratory control sample (LCS) and / or the laboratory control sample duplicate (LCSD) for batch 108684 exceeded control limits for the following analytes: 2-Butanone. This is due to the coelution with Ethyl Acetate in the mega mix spike solution.

Method(s) 8260C: The following samples were diluted to bring the concentration of target analytes within the calibration range: MW217M-20130321-01 (480-34804-3). Elevated reporting limits (RLs) are provided.

Method(s) 8260, 8260C: The laboratory control sample (LCS) and / or the laboratory control sample duplicate (LCSD) for batch 108964 exceeded control limits for the following analyte: 2-Butanone (MEK). This is due to the coelution with Ethyl acetate in the mega mix spike solution.

No other analytical or quality issues were noted.

MassDEP Analytical Protocol Certification Form

Laboratory Name: **TestAmerica Buffalo** Project #: **480-34804-1**

Project Location: **IDS Wayland** RTN:

This form provides certifications for the following data set: list Laboratory Sample ID Number(s):

1 thru 3

Matrices: [x] Groundwater/Surface Water [ ] Soil/Sediment [ ] Drinking Water [ ] Air [ ] Other:

CAM Protocols (check all that apply below):

8260 VOC CAM II A [x]	7470/7471 Hg CAM III B [ ]	Mass DEP VPH CAM IV A [ ]	8081 Pesticides CAM V B [ ]	7196 Hex Cr CAM VI B [ ]	Mass DEP APH CAM IX A [ ]
8270 SVOC CAM II B [ ]	7010 Metals CAM III C [ ]	Mass DEP EPH CAM IV B [ ]	8151 Herbicides CAM V C [ ]	8330 Explosives CAM VIII A [ ]	TO-15 VOC CAM IX B [ ]
6010 Metals CAM III A [ ]	6020 Metals CAM III D [ ]	8082 PCB CAM V A [ ]	9014 Total Cyanide/PAC CAM VI A [ ]	6860 Perchlorate CAM VIII B [ ]	

Affirmative Responses to Questions A through F are required for "Presumptive Certainty" status

A	Were all samples received in a condition consistent with those described on the Chain-of-Custody, properly preserved (including temperature) in the field or laboratory, and prepared/analyzed within method holding time.	[x] Yes [ ] No
B	Were the analytical method(s) and all associated QC requirements specified in the selected CAM protocol(s) followed?	[x] Yes [ ] No
C	Were all required corrective actions and analytical response actions specified in the selected CAM protocol(s) implemented for all identified performance standard non-conformances?	[x] Yes [ ] No
D	Does the laboratory report comply with all the reporting requirements specified in CAM VII A, "Quality Assurance and Quality Control Guidelines for the Acquisition and Reporting of Analytical Data"?	[x] Yes [ ] No
E	a. VPH, EPH and APH Methods only: Was each method conducted without significant modification(s)? (Refer to the individual method(s) for a list of significant modifications). b. APH and TO-15 Methods only: Was the complete analyte list reported for each method?	[ ] Yes [ ] No [ ] Yes [ ] No
F	Were all applicable CAM protocol QC and performance standard non-conformances identified and evaluated in a laboratory narrative (including all "No" responses to Questions A through E)?	[x] Yes [ ] No

Responses to Questions G, H and I below are required for "Presumptive Certainty" status

G	Were the reporting limits at or below all CAM reporting limits specified in the selected CAM protocol(s)?	[ ] Yes [x] No[1]

***Data User Note:* Data that achieve "Presumptive Certainty" status may not necessarily meet the data usability and representativeness requirements described in 310 CMR 40. 1056 (2)(k) and WCS-07-350**

H	Were **all** QC performance standards specified in the CAM protocol(s) achieved?	[ ] Yes [x] No[1]
I	Were results reported for the complete analyte list specified in the selected CAM protocol(s) ?	[x] Yes [ ] No[1]

[1] All negative responses must be addressed in an attached laboratory narrative.

I, the undersigned, attest under the pains and penalties of perjury that, based upon my personal inquiry of those responsible for obtaining the information, the material contained in this analytical report is, to the best of my knowledge and belief, is accurate and complete.

Signature: Position: Project Manager

Printed Name: Brian J. Fischer Date: 3/29/2013

Detection Summary

Client: ERM-Northeast
Project/Site: IDS Wayland

TestAmerica Job ID: 480-34804-1

Client Sample ID: MW217D-20130321-01 — Lab Sample ID: 480-34804-1

Analyte	Result	Qualifier	RL	MDL	Unit	Dil Fac	D	Method	Prep Type
Trichloroethene	1.9		1.0		ug/L	1		8260C	Total/NA

Client Sample ID: MW217S-20130321-01 — Lab Sample ID: 480-34804-2

No Detections.

Client Sample ID: MW217M-20130321-01 — Lab Sample ID: 480-34804-3

Analyte	Result	Qualifier	RL	MDL	Unit	Dil Fac	D	Method	Prep Type
1,1-Dichloroethane	2.0		1.0		ug/L	1		8260C	Total/NA
1,2-Dichlorobenzene	1.4		1.0		ug/L	1		8260C	Total/NA
Tert-amyl methyl ether	86		5.0		ug/L	1		8260C	Total/NA
Trichloroethene	6.4		1.0		ug/L	1		8260C	Total/NA
Methyl tert-butyl ether - DL	250		4.0		ug/L	4		8260C	Total/NA

This Detection Summary does not include radiochemical test results.

Client: ERM-Northeast
Project/Site: IDS Wayland

TestAmerica Job ID: 480-34804-1

Client Sample ID: MW217D-20130321-01
Date Collected: 03/21/13 09:20
Date Received: 03/22/13 12:30

Lab Sample ID: 480-34804-1
Matrix: Water

Method: 8260C - Volatile Organic Compounds (GC/MS)

Analyte	Result	Qualifier	RL	MDL	Unit	D	Prepared	Analyzed	Dil Fac
1,1,1,2-Tetrachloroethane	ND		1.0		ug/L			03/22/13 15:41	1
1,1,1-Trichloroethane	ND		1.0		ug/L			03/22/13 15:41	1
1,1,2,2-Tetrachloroethane	ND		0.50		ug/L			03/22/13 15:41	1
1,1,2-Trichloroethane	ND		1.0		ug/L			03/22/13 15:41	1
1,1-Dichloroethane	ND		1.0		ug/L			03/22/13 15:41	1
1,1-Dichloroethene	ND		1.0		ug/L			03/22/13 15:41	1
1,1-Dichloropropene	ND		1.0		ug/L			03/22/13 15:41	1
1,2,3-Trichlorobenzene	ND		1.0		ug/L			03/22/13 15:41	1
1,2,3-Trichloropropane	ND		1.0		ug/L			03/22/13 15:41	1
1,2,4-Trichlorobenzene	ND		1.0		ug/L			03/22/13 15:41	1
1,2,4-Trimethylbenzene	ND		1.0		ug/L			03/22/13 15:41	1
1,2-Dibromo-3-Chloropropane	ND		5.0		ug/L			03/22/13 15:41	1
1,2-Dichlorobenzene	ND		1.0		ug/L			03/22/13 15:41	1
1,2-Dichloroethane	ND		1.0		ug/L			03/22/13 15:41	1
1,2-Dichloropropane	ND		1.0		ug/L			03/22/13 15:41	1
1,3,5-Trimethylbenzene	ND		1.0		ug/L			03/22/13 15:41	1
1,3-Dichlorobenzene	ND		1.0		ug/L			03/22/13 15:41	1
1,3-Dichloropropane	ND		1.0		ug/L			03/22/13 15:41	1
1,4-Dichlorobenzene	ND		1.0		ug/L			03/22/13 15:41	1
1,4-Dioxane	ND		50		ug/L			03/22/13 15:41	1
2,2-Dichloropropane	ND		1.0		ug/L			03/22/13 15:41	1
2-Butanone (MEK)	ND	*	10		ug/L			03/22/13 15:41	1
2-Chlorotoluene	ND		1.0		ug/L			03/22/13 15:41	1
2-Hexanone	ND		10		ug/L			03/22/13 15:41	1
4-Chlorotoluene	ND		1.0		ug/L			03/22/13 15:41	1
4-Isopropyltoluene	ND		1.0		ug/L			03/22/13 15:41	1
4-Methyl-2-pentanone (MIBK)	ND		10		ug/L			03/22/13 15:41	1
Acetone	ND		50		ug/L			03/22/13 15:41	1
Benzene	ND		1.0		ug/L			03/22/13 15:41	1
Bromobenzene	ND		1.0		ug/L			03/22/13 15:41	1
Bromoform	ND		1.0		ug/L			03/22/13 15:41	1
Bromomethane	ND		2.0		ug/L			03/22/13 15:41	1
Carbon disulfide	ND		10		ug/L			03/22/13 15:41	1
Carbon tetrachloride	ND		1.0		ug/L			03/22/13 15:41	1
Chlorobenzene	ND		1.0		ug/L			03/22/13 15:41	1
Chlorobromomethane	ND		1.0		ug/L			03/22/13 15:41	1
Chlorodibromomethane	ND		0.50		ug/L			03/22/13 15:41	1
Chloroethane	ND		2.0		ug/L			03/22/13 15:41	1
Chloroform	ND		1.0		ug/L			03/22/13 15:41	1
Chloromethane	ND		2.0		ug/L			03/22/13 15:41	1
cis-1,2-Dichloroethene	ND		1.0		ug/L			03/22/13 15:41	1
cis-1,3-Dichloropropene	ND		0.40		ug/L			03/22/13 15:41	1
Dichlorobromomethane	ND		0.50		ug/L			03/22/13 15:41	1
Dichlorodifluoromethane	ND		1.0		ug/L			03/22/13 15:41	1
Ethyl ether	ND		1.0		ug/L			03/22/13 15:41	1
Ethylbenzene	ND		1.0		ug/L			03/22/13 15:41	1
Ethylene Dibromide	ND		1.0		ug/L			03/22/13 15:41	1
Hexachlorobutadiene	ND		0.40		ug/L			03/22/13 15:41	1
Isopropyl ether	ND		10		ug/L			03/22/13 15:41	1

Client Sample ID: MW217D-20130321-01

Lab Sample ID: 480-34804-1

Date Collected: 03/21/13 09:20

Matrix: Water

Date Received: 03/22/13 12:30

Method: 8260C - Volatile Organic Compounds (GC/MS) (Continued)

Analyte	Result	Qualifier	RL	MDL	Unit	D	Prepared	Analyzed	Dil Fac
Isopropylbenzene	ND		1.0		ug/L			03/22/13 15:41	1
Methyl tert-butyl ether	ND		1.0		ug/L			03/22/13 15:41	1
Methylene Chloride	ND		1.0		ug/L			03/22/13 15:41	1
m-Xylene & p-Xylene	ND		2.0		ug/L			03/22/13 15:41	1
Naphthalene	ND		5.0		ug/L			03/22/13 15:41	1
n-Butylbenzene	ND		1.0		ug/L			03/22/13 15:41	1
N-Propylbenzene	ND		1.0		ug/L			03/22/13 15:41	1
o-Xylene	ND		1.0		ug/L			03/22/13 15:41	1
sec-Butylbenzene	ND		1.0		ug/L			03/22/13 15:41	1
Styrene	ND		1.0		ug/L			03/22/13 15:41	1
Tert-amyl methyl ether	ND		5.0		ug/L			03/22/13 15:41	1
Tert-butyl ethyl ether	ND		5.0		ug/L			03/22/13 15:41	1
tert-Butylbenzene	ND		1.0		ug/L			03/22/13 15:41	1
Tetrachloroethene	ND		1.0		ug/L			03/22/13 15:41	1
Tetrahydrofuran	ND		10		ug/L			03/22/13 15:41	1
Toluene	ND		1.0		ug/L			03/22/13 15:41	1
trans-1,2-Dichloroethene	ND		1.0		ug/L			03/22/13 15:41	1
trans-1,3-Dichloropropene	ND		0.40		ug/L			03/22/13 15:41	1
Trichloroethene	**1.9**		1.0		ug/L			03/22/13 15:41	1
Trichlorofluoromethane	ND		1.0		ug/L			03/22/13 15:41	1
Vinyl chloride	ND		0.50		ug/L			03/22/13 15:41	1
Dibromomethane	ND		1.0		ug/L			03/22/13 15:41	1

Surrogate	*%Recovery*	*Qualifier*	*Limits*	*Prepared*	*Analyzed*	*Dil Fac*
Toluene-d8 (Surr)	*98*		*70 - 130*		*03/22/13 15:41*	*1*
1,2-Dichloroethane-d4 (Surr)	*96*		*70 - 130*		*03/22/13 15:41*	*1*
4-Bromofluorobenzene (Surr)	*102*		*70 - 130*		*03/22/13 15:41*	*1*

Client Sample ID: MW217S-20130321-01

Lab Sample ID: 480-34804-2

Date Collected: 03/21/13 11:45

Matrix: Water

Date Received: 03/22/13 12:30

Method: 8260C - Volatile Organic Compounds (GC/MS)

Analyte	Result	Qualifier	RL	MDL	Unit	D	Prepared	Analyzed	Dil Fac
1,1,1,2-Tetrachloroethane	ND		1.0		ug/L			03/22/13 16:05	1
1,1,1-Trichloroethane	ND		1.0		ug/L			03/22/13 16:05	1
1,1,2,2-Tetrachloroethane	ND		0.50		ug/L			03/22/13 16:05	1
1,1,2-Trichloroethane	ND		1.0		ug/L			03/22/13 16:05	1
1,1-Dichloroethane	ND		1.0		ug/L			03/22/13 16:05	1
1,1-Dichloroethene	ND		1.0		ug/L			03/22/13 16:05	1
1,1-Dichloropropene	ND		1.0		ug/L			03/22/13 16:05	1
1,2,3-Trichlorobenzene	ND		1.0		ug/L			03/22/13 16:05	1
1,2,3-Trichloropropane	ND		1.0		ug/L			03/22/13 16:05	1
1,2,4-Trichlorobenzene	ND		1.0		ug/L			03/22/13 16:05	1
1,2,4-Trimethylbenzene	ND		1.0		ug/L			03/22/13 16:05	1
1,2-Dibromo-3-Chloropropane	ND		5.0		ug/L			03/22/13 16:05	1
1,2-Dichlorobenzene	ND		1.0		ug/L			03/22/13 16:05	1
1,2-Dichloroethane	ND		1.0		ug/L			03/22/13 16:05	1
1,2-Dichloropropane	ND		1.0		ug/L			03/22/13 16:05	1
1,3,5-Trimethylbenzene	ND		1.0		ug/L			03/22/13 16:05	1

Client: ERM-Northeast
Project/Site: IDS Wayland

TestAmerica Job ID: 480-34804-1

Client Sample ID: MW217S-20130321-01
Date Collected: 03/21/13 11:45
Date Received: 03/22/13 12:30

Lab Sample ID: 480-34804-2
Matrix: Water

Method: 8260C - Volatile Organic Compounds (GC/MS) (Continued)

Analyte	Result	Qualifier	RL	MDL	Unit	D	Prepared	Analyzed	Dil Fac
1,3-Dichlorobenzene	ND		1.0		ug/L			03/22/13 16:05	1
1,3-Dichloropropane	ND		1.0		ug/L			03/22/13 16:05	1
1,4-Dichlorobenzene	ND		1.0		ug/L			03/22/13 16:05	1
1,4-Dioxane	ND		50		ug/L			03/22/13 16:05	1
2,2-Dichloropropane	ND		1.0		ug/L			03/22/13 16:05	1
2-Butanone (MEK)	ND	*	10		ug/L			03/22/13 16:05	1
2-Chlorotoluene	ND		1.0		ug/L			03/22/13 16:05	1
2-Hexanone	ND		10		ug/L			03/22/13 16:05	1
4-Chlorotoluene	ND		1.0		ug/L			03/22/13 16:05	1
4-Isopropyltoluene	ND		1.0		ug/L			03/22/13 16:05	1
4-Methyl-2-pentanone (MIBK)	ND		10		ug/L			03/22/13 16:05	1
Acetone	ND		50		ug/L			03/22/13 16:05	1
Benzene	ND		1.0		ug/L			03/22/13 16:05	1
Bromobenzene	ND		1.0		ug/L			03/22/13 16:05	1
Bromoform	ND		1.0		ug/L			03/22/13 16:05	1
Bromomethane	ND		2.0		ug/L			03/22/13 16:05	1
Carbon disulfide	ND		10		ug/L			03/22/13 16:05	1
Carbon tetrachloride	ND		1.0		ug/L			03/22/13 16:05	1
Chlorobenzene	ND		1.0		ug/L			03/22/13 16:05	1
Chlorobromomethane	ND		1.0		ug/L			03/22/13 16:05	1
Chlorodibromomethane	ND		0.50		ug/L			03/22/13 16:05	1
Chloroethane	ND		2.0		ug/L			03/22/13 16:05	1
Chloroform	ND		1.0		ug/L			03/22/13 16:05	1
Chloromethane	ND		2.0		ug/L			03/22/13 16:05	1
cis-1,2-Dichloroethene	ND		1.0		ug/L			03/22/13 16:05	1
cis-1,3-Dichloropropene	ND		0.40		ug/L			03/22/13 16:05	1
Dichlorobromomethane	ND		0.50		ug/L			03/22/13 16:05	1
Dichlorodifluoromethane	ND		1.0		ug/L			03/22/13 16:05	1
Ethyl ether	ND		1.0		ug/L			03/22/13 16:05	1
Ethylbenzene	ND		1.0		ug/L			03/22/13 16:05	1
Ethylene Dibromide	ND		1.0		ug/L			03/22/13 16:05	1
Hexachlorobutadiene	ND		0.40		ug/L			03/22/13 16:05	1
Isopropyl ether	ND		10		ug/L			03/22/13 16:05	1
Isopropylbenzene	ND		1.0		ug/L			03/22/13 16:05	1
Methyl tert-butyl ether	ND		1.0		ug/L			03/22/13 16:05	1
Methylene Chloride	ND		1.0		ug/L			03/22/13 16:05	1
m-Xylene & p-Xylene	ND		2.0		ug/L			03/22/13 16:05	1
Naphthalene	ND		5.0		ug/L			03/22/13 16:05	1
n-Butylbenzene	ND		1.0		ug/L			03/22/13 16:05	1
N-Propylbenzene	ND		1.0		ug/L			03/22/13 16:05	1
o-Xylene	ND		1.0		ug/L			03/22/13 16:05	1
sec-Butylbenzene	ND		1.0		ug/L			03/22/13 16:05	1
Styrene	ND		1.0		ug/L			03/22/13 16:05	1
Tert-amyl methyl ether	ND		5.0		ug/L			03/22/13 16:05	1
Tert-butyl ethyl ether	ND		5.0		ug/L			03/22/13 16:05	1
tert-Butylbenzene	ND		1.0		ug/L			03/22/13 16:05	1
Tetrachloroethene	ND		1.0		ug/L			03/22/13 16:05	1
Tetrahydrofuran	ND		10		ug/L			03/22/13 16:05	1
Toluene	ND		1.0		ug/L			03/22/13 16:05	1

Client Sample ID: MW217S-20130321-01

Lab Sample ID: 480-34804-2

Date Collected: 03/21/13 11:45

Matrix: Water

Date Received: 03/22/13 12:30

Method: 8260C - Volatile Organic Compounds (GC/MS) (Continued)

Analyte	Result	Qualifier	RL	MDL	Unit	D	Prepared	Analyzed	Dil Fac
trans-1,2-Dichloroethene	ND		1.0		ug/L			03/22/13 16:05	1
trans-1,3-Dichloropropene	ND		0.40		ug/L			03/22/13 16:05	1
Trichloroethene	ND		1.0		ug/L			03/22/13 16:05	1
Trichlorofluoromethane	ND		1.0		ug/L			03/22/13 16:05	1
Vinyl chloride	ND		0.50		ug/L			03/22/13 16:05	1
Dibromomethane	ND		1.0		ug/L			03/22/13 16:05	1

Surrogate	*%Recovery*	*Qualifier*	*Limits*	*Prepared*	*Analyzed*	*Dil Fac*
Toluene-d8 (Surr)	*97*		*70 - 130*		*03/22/13 16:05*	*1*
1,2-Dichloroethane-d4 (Surr)	*95*		*70 - 130*		*03/22/13 16:05*	*1*
4-Bromofluorobenzene (Surr)	*101*		*70 - 130*		*03/22/13 16:05*	*1*

Client Sample ID: MW217M-20130321-01

Lab Sample ID: 480-34804-3

Date Collected: 03/21/13 10:30

Matrix: Water

Date Received: 03/22/13 12:30

Method: 8260C - Volatile Organic Compounds (GC/MS)

Analyte	Result	Qualifier	RL	MDL	Unit	D	Prepared	Analyzed	Dil Fac
1,1,1,2-Tetrachloroethane	ND		1.0		ug/L			03/22/13 16:29	1
1,1,1-Trichloroethane	ND		1.0		ug/L			03/22/13 16:29	1
1,1,2,2-Tetrachloroethane	ND		0.50		ug/L			03/22/13 16:29	1
1,1,2-Trichloroethane	ND		1.0		ug/L			03/22/13 16:29	1
1,1-Dichloroethane	**2.0**		1.0		ug/L			03/22/13 16:29	1
1,1-Dichloroethene	ND		1.0		ug/L			03/22/13 16:29	1
1,1-Dichloropropene	ND		1.0		ug/L			03/22/13 16:29	1
1,2,3-Trichlorobenzene	ND		1.0		ug/L			03/22/13 16:29	1
1,2,3-Trichloropropane	ND		1.0		ug/L			03/22/13 16:29	1
1,2,4-Trichlorobenzene	ND		1.0		ug/L			03/22/13 16:29	1
1,2,4-Trimethylbenzene	ND		1.0		ug/L			03/22/13 16:29	1
1,2-Dibromo-3-Chloropropane	ND		5.0		ug/L			03/22/13 16:29	1
1,2-Dichlorobenzene	**1.4**		1.0		ug/L			03/22/13 16:29	1
1,2-Dichloroethane	ND		1.0		ug/L			03/22/13 16:29	1
1,2-Dichloropropane	ND		1.0		ug/L			03/22/13 16:29	1
1,3,5-Trimethylbenzene	ND		1.0		ug/L			03/22/13 16:29	1
1,3-Dichlorobenzene	ND		1.0		ug/L			03/22/13 16:29	1
1,3-Dichloropropane	ND		1.0		ug/L			03/22/13 16:29	1
1,4-Dichlorobenzene	ND		1.0		ug/L			03/22/13 16:29	1
1,4-Dioxane	ND		50		ug/L			03/22/13 16:29	1
2,2-Dichloropropane	ND		1.0		ug/L			03/22/13 16:29	1
2-Butanone (MEK)	ND	*	10		ug/L			03/22/13 16:29	1
2-Chlorotoluene	ND		1.0		ug/L			03/22/13 16:29	1
2-Hexanone	ND		10		ug/L			03/22/13 16:29	1
4-Chlorotoluene	ND		1.0		ug/L			03/22/13 16:29	1
4-Isopropyltoluene	ND		1.0		ug/L			03/22/13 16:29	1
4-Methyl-2-pentanone (MIBK)	ND		10		ug/L			03/22/13 16:29	1
Acetone	ND		50		ug/L			03/22/13 16:29	1
Benzene	ND		1.0		ug/L			03/22/13 16:29	1
Bromobenzene	ND		1.0		ug/L			03/22/13 16:29	1
Bromoform	ND		1.0		ug/L			03/22/13 16:29	1
Bromomethane	ND		2.0		ug/L			03/22/13 16:29	1

Client Sample ID: MW217M-20130321-01
Date Collected: 03/21/13 10:30
Date Received: 03/22/13 12:30

Lab Sample ID: 480-34804-3
Matrix: Water

Method: 8260C - Volatile Organic Compounds (GC/MS) (Continued)

Analyte	Result	Qualifier	RL	MDL	Unit	D	Prepared	Analyzed	Dil Fac
Carbon disulfide	ND		10		ug/L			03/22/13 16:29	1
Carbon tetrachloride	ND		1.0		ug/L			03/22/13 16:29	1
Chlorobenzene	ND		1.0		ug/L			03/22/13 16:29	1
Chlorobromomethane	ND		1.0		ug/L			03/22/13 16:29	1
Chlorodibromomethane	ND		0.50		ug/L			03/22/13 16:29	1
Chloroethane	ND		2.0		ug/L			03/22/13 16:29	1
Chloroform	ND		1.0		ug/L			03/22/13 16:29	1
Chloromethane	ND		2.0		ug/L			03/22/13 16:29	1
cis-1,2-Dichloroethene	ND		1.0		ug/L			03/22/13 16:29	1
cis-1,3-Dichloropropene	ND		0.40		ug/L			03/22/13 16:29	1
Dichlorobromomethane	ND		0.50		ug/L			03/22/13 16:29	1
Dichlorodifluoromethane	ND		1.0		ug/L			03/22/13 16:29	1
Ethyl ether	ND		1.0		ug/L			03/22/13 16:29	1
Ethylbenzene	ND		1.0		ug/L			03/22/13 16:29	1
Ethylene Dibromide	ND		1.0		ug/L			03/22/13 16:29	1
Hexachlorobutadiene	ND		0.40		ug/L			03/22/13 16:29	1
Isopropyl ether	ND		10		ug/L			03/22/13 16:29	1
Isopropylbenzene	ND		1.0		ug/L			03/22/13 16:29	1
Methylene Chloride	ND		1.0		ug/L			03/22/13 16:29	1
m-Xylene & p-Xylene	ND		2.0		ug/L			03/22/13 16:29	1
Naphthalene	ND		5.0		ug/L			03/22/13 16:29	1
n-Butylbenzene	ND		1.0		ug/L			03/22/13 16:29	1
N-Propylbenzene	ND		1.0		ug/L			03/22/13 16:29	1
o-Xylene	ND		1.0		ug/L			03/22/13 16:29	1
sec-Butylbenzene	ND		1.0		ug/L			03/22/13 16:29	1
Styrene	ND		1.0		ug/L			03/22/13 16:29	1
Tert-amyl methyl ether	**86**		5.0		ug/L			03/22/13 16:29	1
Tert-butyl ethyl ether	ND		5.0		ug/L			03/22/13 16:29	1
tert-Butylbenzene	ND		1.0		ug/L			03/22/13 16:29	1
Tetrachloroethene	ND		1.0		ug/L			03/22/13 16:29	1
Tetrahydrofuran	ND		10		ug/L			03/22/13 16:29	1
Toluene	ND		1.0		ug/L			03/22/13 16:29	1
trans-1,2-Dichloroethene	ND		1.0		ug/L			03/22/13 16:29	1
trans-1,3-Dichloropropene	ND		0.40		ug/L			03/22/13 16:29	1
Trichloroethene	**6.4**		1.0		ug/L			03/22/13 16:29	1
Trichlorofluoromethane	ND		1.0		ug/L			03/22/13 16:29	1
Vinyl chloride	ND		0.50		ug/L			03/22/13 16:29	1
Dibromomethane	ND		1.0		ug/L			03/22/13 16:29	1

Surrogate	*%Recovery*	*Qualifier*	*Limits*	*Prepared*	*Analyzed*	*Dil Fac*
Toluene-d8 (Surr)	*96*		*70 - 130*		*03/22/13 16:29*	*1*
1,2-Dichloroethane-d4 (Surr)	*94*		*70 - 130*		*03/22/13 16:29*	*1*
4-Bromofluorobenzene (Surr)	*98*		*70 - 130*		*03/22/13 16:29*	*1*

Method: 8260C - Volatile Organic Compounds (GC/MS) - DL

Analyte	Result	Qualifier	RL	MDL	Unit	D	Prepared	Analyzed	Dil Fac
Methyl tert-butyl ether	**250**		4.0		ug/L			03/25/13 12:34	4

Surrogate	*%Recovery*	*Qualifier*	*Limits*	*Prepared*	*Analyzed*	*Dil Fac*
Toluene-d8 (Surr)	*98*		*70 - 130*		*03/25/13 12:34*	*4*

Client: ERM-Northeast
Project/Site: IDS Wayland

TestAmerica Job ID: 480-34804-1

Client Sample ID: MW217M-20130321-01
Date Collected: 03/21/13 10:30
Date Received: 03/22/13 12:30

Lab Sample ID: 480-34804-3
Matrix: Water

Method: 8260C - Volatile Organic Compounds (GC/MS) - DL (Continued)

Surrogate	%Recovery	Qualifier	Limits	Prepared	Analyzed	Dil Fac
1,2-Dichloroethane-d4 (Surr)	92		70 - 130		03/25/13 12:34	4
4-Bromofluorobenzene (Surr)	99		70 - 130		03/25/13 12:34	4

Surrogate Summary

Client: ERM-Northeast
Project/Site: IDS Wayland

TestAmerica Job ID: 480-34804-1

Method: 8260C - Volatile Organic Compounds (GC/MS)

Matrix: Water **Prep Type: Total/NA**

		Percent Surrogate Recovery (Acceptance Limits)		
		TOL	12DCE	BFB
Lab Sample ID	Client Sample ID	(70-130)	(70-130)	(70-130)
480-34804-1	MW217D-20130321-01	98	96	102
480-34804-2	MW217S-20130321-01	97	95	101
480-34804-3	MW217M-20130321-01	96	94	98
480-34804-3 - DL	MW217M-20130321-01	98	92	99
LCS 480-108684/4	Lab Control Sample	97	93	102
LCS 480-108964/4	Lab Control Sample	96	90	102
LCSD 480-108684/5	Lab Control Sample Dup	98	92	103
LCSD 480-108964/5	Lab Control Sample Dup	96	92	102
MB 480-108684/7	Method Blank	96	94	99
MB 480-108964/7	Method Blank	96	94	99

Surrogate Legend

TOL = Toluene-d8 (Surr)

12DCE = 1,2-Dichloroethane-d4 (Surr)

BFB = 4-Bromofluorobenzene (Surr)

Method: 8260C - Volatile Organic Compounds (GC/MS)

Lab Sample ID: MB 480-108684/7
Matrix: Water
Analysis Batch: 108684

Client Sample ID: Method Blank
Prep Type: Total/NA

Analyte	MB Result	MB Qualifier	RL	MDL	Unit	D	Prepared	Analyzed	Dil Fac
1,1,1,2-Tetrachloroethane	ND		1.0		ug/L			03/22/13 11:37	1
1,1,1-Trichloroethane	ND		1.0		ug/L			03/22/13 11:37	1
1,1,2,2-Tetrachloroethane	ND		0.50		ug/L			03/22/13 11:37	1
1,1,2-Trichloroethane	ND		1.0		ug/L			03/22/13 11:37	1
1,1-Dichloroethane	ND		1.0		ug/L			03/22/13 11:37	1
1,1-Dichloroethene	ND		1.0		ug/L			03/22/13 11:37	1
1,1-Dichloropropene	ND		1.0		ug/L			03/22/13 11:37	1
1,2,3-Trichlorobenzene	ND		1.0		ug/L			03/22/13 11:37	1
1,2,3-Trichloropropane	ND		1.0		ug/L			03/22/13 11:37	1
1,2,4-Trichlorobenzene	ND		1.0		ug/L			03/22/13 11:37	1
1,2,4-Trimethylbenzene	ND		1.0		ug/L			03/22/13 11:37	1
1,2-Dibromo-3-Chloropropane	ND		5.0		ug/L			03/22/13 11:37	1
1,2-Dichlorobenzene	ND		1.0		ug/L			03/22/13 11:37	1
1,2-Dichloroethane	ND		1.0		ug/L			03/22/13 11:37	1
1,2-Dichloropropane	ND		1.0		ug/L			03/22/13 11:37	1
1,3,5-Trimethylbenzene	ND		1.0		ug/L			03/22/13 11:37	1
1,3-Dichlorobenzene	ND		1.0		ug/L			03/22/13 11:37	1
1,3-Dichloropropane	ND		1.0		ug/L			03/22/13 11:37	1
1,4-Dichlorobenzene	ND		1.0		ug/L			03/22/13 11:37	1
1,4-Dioxane	ND		50		ug/L			03/22/13 11:37	1
2,2-Dichloropropane	ND		1.0		ug/L			03/22/13 11:37	1
2-Butanone (MEK)	ND		10		ug/L			03/22/13 11:37	1
2-Chlorotoluene	ND		1.0		ug/L			03/22/13 11:37	1
2-Hexanone	ND		10		ug/L			03/22/13 11:37	1
4-Chlorotoluene	ND		1.0		ug/L			03/22/13 11:37	1
4-Isopropyltoluene	ND		1.0		ug/L			03/22/13 11:37	1
4-Methyl-2-pentanone (MIBK)	ND		10		ug/L			03/22/13 11:37	1
Acetone	ND		50		ug/L			03/22/13 11:37	1
Benzene	ND		1.0		ug/L			03/22/13 11:37	1
Bromobenzene	ND		1.0		ug/L			03/22/13 11:37	1
Bromoform	ND		1.0		ug/L			03/22/13 11:37	1
Bromomethane	ND		2.0		ug/L			03/22/13 11:37	1
Carbon disulfide	ND		10		ug/L			03/22/13 11:37	1
Carbon tetrachloride	ND		1.0		ug/L			03/22/13 11:37	1
Chlorobenzene	ND		1.0		ug/L			03/22/13 11:37	1
Chlorobromomethane	ND		1.0		ug/L			03/22/13 11:37	1
Chlorodibromomethane	ND		0.50		ug/L			03/22/13 11:37	1
Chloroethane	ND		2.0		ug/L			03/22/13 11:37	1
Chloroform	ND		1.0		ug/L			03/22/13 11:37	1
Chloromethane	ND		2.0		ug/L			03/22/13 11:37	1
cis-1,2-Dichloroethene	ND		1.0		ug/L			03/22/13 11:37	1
cis-1,3-Dichloropropene	ND		0.40		ug/L			03/22/13 11:37	1
Dichlorobromomethane	ND		0.50		ug/L			03/22/13 11:37	1
Dichlorodifluoromethane	ND		1.0		ug/L			03/22/13 11:37	1
Ethyl ether	ND		1.0		ug/L			03/22/13 11:37	1
Ethylbenzene	ND		1.0		ug/L			03/22/13 11:37	1
Ethylene Dibromide	ND		1.0		ug/L			03/22/13 11:37	1
Hexachlorobutadiene	ND		0.40		ug/L			03/22/13 11:37	1

Method: 8260C - Volatile Organic Compounds (GC/MS) (Continued)

Lab Sample ID: MB 480-108684/7
Matrix: Water
Analysis Batch: 108684

Client Sample ID: Method Blank
Prep Type: Total/NA

Analyte	MB Result	MB Qualifier	RL	MDL	Unit	D	Prepared	Analyzed	Dil Fac
Isopropyl ether	ND		10		ug/L			03/22/13 11:37	1
Isopropylbenzene	ND		1.0		ug/L			03/22/13 11:37	1
Methyl tert-butyl ether	ND		1.0		ug/L			03/22/13 11:37	1
Methylene Chloride	ND		1.0		ug/L			03/22/13 11:37	1
m-Xylene & p-Xylene	ND		2.0		ug/L			03/22/13 11:37	1
Naphthalene	ND		5.0		ug/L			03/22/13 11:37	1
n-Butylbenzene	ND		1.0		ug/L			03/22/13 11:37	1
N-Propylbenzene	ND		1.0		ug/L			03/22/13 11:37	1
o-Xylene	ND		1.0		ug/L			03/22/13 11:37	1
sec-Butylbenzene	ND		1.0		ug/L			03/22/13 11:37	1
Styrene	ND		1.0		ug/L			03/22/13 11:37	1
Tert-amyl methyl ether	ND		5.0		ug/L			03/22/13 11:37	1
Tert-butyl ethyl ether	ND		5.0		ug/L			03/22/13 11:37	1
tert-Butylbenzene	ND		1.0		ug/L			03/22/13 11:37	1
Tetrachloroethene	ND		1.0		ug/L			03/22/13 11:37	1
Tetrahydrofuran	ND		10		ug/L			03/22/13 11:37	1
Toluene	ND		1.0		ug/L			03/22/13 11:37	1
trans-1,2-Dichloroethene	ND		1.0		ug/L			03/22/13 11:37	1
trans-1,3-Dichloropropene	ND		0.40		ug/L			03/22/13 11:37	1
Trichloroethene	ND		1.0		ug/L			03/22/13 11:37	1
Trichlorofluoromethane	ND		1.0		ug/L			03/22/13 11:37	1
Vinyl chloride	ND		0.50		ug/L			03/22/13 11:37	1
Dibromomethane	ND		1.0		ug/L			03/22/13 11:37	1

Surrogate	*MB %Recovery*	*MB Qualifier*	*Limits*	*Prepared*	*Analyzed*	*Dil Fac*
Toluene-d8 (Surr)	*96*		*70 - 130*		*03/22/13 11:37*	*1*
1,2-Dichloroethane-d4 (Surr)	*94*		*70 - 130*		*03/22/13 11:37*	*1*
4-Bromofluorobenzene (Surr)	*99*		*70 - 130*		*03/22/13 11:37*	*1*

Lab Sample ID: LCS 480-108684/4
Matrix: Water
Analysis Batch: 108684

Client Sample ID: Lab Control Sample
Prep Type: Total/NA

Analyte	Spike Added	LCS Result	LCS Qualifier	Unit	D	%Rec	%Rec. Limits
1,1,1,2-Tetrachloroethane	25.0	23.8		ug/L		95	70 - 130
1,1,1-Trichloroethane	25.0	21.8		ug/L		87	70 - 130
1,1,2,2-Tetrachloroethane	25.0	24.3		ug/L		97	70 - 130
1,1,2-Trichloroethane	25.0	23.8		ug/L		95	70 - 130
1,1-Dichloroethane	25.0	22.7		ug/L		91	70 - 130
1,1-Dichloroethene	25.0	24.1		ug/L		96	70 - 130
1,1-Dichloropropene	25.0	23.4		ug/L		93	70 - 130
1,2,3-Trichlorobenzene	25.0	25.4		ug/L		102	70 - 130
1,2,3-Trichloropropane	25.0	24.8		ug/L		99	70 - 130
1,2,4-Trichlorobenzene	25.0	26.2		ug/L		105	70 - 130
1,2,4-Trimethylbenzene	25.0	23.6		ug/L		95	70 - 130
1,2-Dibromo-3-Chloropropane	25.0	23.7		ug/L		95	70 - 130
1,2-Dichlorobenzene	25.0	24.6		ug/L		98	70 - 130
1,2-Dichloroethane	25.0	22.6		ug/L		90	70 - 130

Method: 8260C - Volatile Organic Compounds (GC/MS) (Continued)

Lab Sample ID: LCS 480-108684/4
Matrix: Water
Analysis Batch: 108684

Client Sample ID: Lab Control Sample
Prep Type: Total/NA

Analyte	Spike Added	LCS Result	LCS Qualifier	Unit	D	%Rec	%Rec. Limits
1,2-Dichloropropane	25.0	23.3		ug/L		93	70 - 130
1,3,5-Trimethylbenzene	25.0	23.5		ug/L		94	70 - 130
1,3-Dichlorobenzene	25.0	24.3		ug/L		97	70 - 130
1,3-Dichloropropane	25.0	23.2		ug/L		93	70 - 130
1,4-Dichlorobenzene	25.0	24.7		ug/L		99	70 - 130
1,4-Dioxane	1000	920		ug/L		92	70 - 130
2,2-Dichloropropane	25.0	21.5		ug/L		86	70 - 130
2-Butanone (MEK)	125	167	*	ug/L		133	70 - 130
2-Chlorotoluene	25.0	23.3		ug/L		93	70 - 130
2-Hexanone	125	117		ug/L		94	70 - 130
4-Chlorotoluene	25.0	20.7		ug/L		83	70 - 130
4-Isopropyltoluene	25.0	24.1		ug/L		97	70 - 130
4-Methyl-2-pentanone (MIBK)	125	116		ug/L		93	70 - 130
Acetone	125	124		ug/L		99	70 - 130
Benzene	25.0	23.2		ug/L		93	70 - 130
Bromobenzene	25.0	24.1		ug/L		96	70 - 130
Bromoform	25.0	22.1		ug/L		89	70 - 130
Bromomethane	25.0	21.7		ug/L		87	70 - 130
Carbon disulfide	25.0	23.4		ug/L		94	70 - 130
Carbon tetrachloride	25.0	22.1		ug/L		88	70 - 130
Chlorobenzene	25.0	23.4		ug/L		94	70 - 130
Chlorobromomethane	25.0	25.4		ug/L		102	70 - 130
Chlorodibromomethane	25.0	22.9		ug/L		92	70 - 130
Chloroethane	25.0	22.5		ug/L		90	70 - 130
Chloroform	25.0	22.5		ug/L		90	70 - 130
Chloromethane	25.0	24.2		ug/L		97	70 - 130
cis-1,2-Dichloroethene	25.0	23.4		ug/L		93	70 - 130
cis-1,3-Dichloropropene	25.0	23.4		ug/L		94	70 - 130
Dichlorobromomethane	25.0	22.7		ug/L		91	70 - 130
Dichlorodifluoromethane	50.0	60.5		ug/L		121	70 - 130
Ethyl ether	25.0	24.6		ug/L		98	70 - 130
Ethylbenzene	25.0	22.8		ug/L		91	70 - 130
Ethylene Dibromide	25.0	23.8		ug/L		95	70 - 130
Hexachlorobutadiene	25.0	24.4		ug/L		98	70 - 130
Isopropyl ether	25.0	24.7		ug/L		99	70 - 130
Isopropylbenzene	25.0	23.2		ug/L		93	70 - 130
Methyl tert-butyl ether	25.0	24.0		ug/L		96	70 - 130
Methylene Chloride	25.0	22.4		ug/L		90	70 - 130
m-Xylene & p-Xylene	50.0	46.9		ug/L		94	70 - 130
Naphthalene	25.0	24.7		ug/L		99	70 - 130
n-Butylbenzene	25.0	23.4		ug/L		94	70 - 130
N-Propylbenzene	25.0	23.1		ug/L		92	70 - 130
o-Xylene	25.0	23.4		ug/L		94	70 - 130
sec-Butylbenzene	25.0	23.8		ug/L		95	70 - 130
Styrene	25.0	23.5		ug/L		94	70 - 130
Tert-amyl methyl ether	25.0	24.2		ug/L		97	70 - 130
Tert-butyl ethyl ether	25.0	23.8		ug/L		95	70 - 130
tert-Butylbenzene	25.0	24.9		ug/L		100	70 - 130

Method: 8260C - Volatile Organic Compounds (GC/MS) (Continued)

Lab Sample ID: LCS 480-108684/4
Matrix: Water
Analysis Batch: 108684

Client Sample ID: Lab Control Sample
Prep Type: Total/NA

Analyte	Spike Added	LCS Result	LCS Qualifier	Unit	D	%Rec	%Rec. Limits
Tetrachloroethene	25.0	24.9		ug/L		100	70 - 130
Tetrahydrofuran	125	122		ug/L		98	70 - 130
Toluene	25.0	23.2		ug/L		93	70 - 130
trans-1,2-Dichloroethene	25.0	24.2		ug/L		97	70 - 130
trans-1,3-Dichloropropene	25.0	22.5		ug/L		90	70 - 130
Trichloroethene	25.0	23.8		ug/L		95	70 - 130
Trichlorofluoromethane	25.0	24.6		ug/L		99	70 - 130
Vinyl chloride	25.0	22.4		ug/L		90	70 - 130
Dibromomethane	25.0	24.0		ug/L		96	70 - 130

Surrogate	*LCS %Recovery*	*LCS Qualifier*	*Limits*
Toluene-d8 (Surr)	*97*		*70 - 130*
1,2-Dichloroethane-d4 (Surr)	*93*		*70 - 130*
4-Bromofluorobenzene (Surr)	*102*		*70 - 130*

Lab Sample ID: LCSD 480-108684/5
Matrix: Water
Analysis Batch: 108684

Client Sample ID: Lab Control Sample Dup
Prep Type: Total/NA

Analyte	Spike Added	LCSD Result	LCSD Qualifier	Unit	D	%Rec	%Rec. Limits	RPD	RPD Limit
1,1,1,2-Tetrachloroethane	25.0	25.3		ug/L		101	70 - 130	6	20
1,1,1-Trichloroethane	25.0	23.4		ug/L		94	70 - 130	7	20
1,1,2,2-Tetrachloroethane	25.0	24.3		ug/L		97	70 - 130	0	20
1,1,2-Trichloroethane	25.0	24.6		ug/L		98	70 - 130	3	20
1,1-Dichloroethane	25.0	23.6		ug/L		94	70 - 130	4	20
1,1-Dichloroethene	25.0	23.5		ug/L		94	70 - 130	2	20
1,1-Dichloropropene	25.0	24.2		ug/L		97	70 - 130	4	20
1,2,3-Trichlorobenzene	25.0	25.7		ug/L		103	70 - 130	1	20
1,2,3-Trichloropropane	25.0	24.5		ug/L		98	70 - 130	1	20
1,2,4-Trichlorobenzene	25.0	26.7		ug/L		107	70 - 130	2	20
1,2,4-Trimethylbenzene	25.0	24.0		ug/L		96	70 - 130	1	20
1,2-Dibromo-3-Chloropropane	25.0	23.3		ug/L		93	70 - 130	1	20
1,2-Dichlorobenzene	25.0	24.6		ug/L		98	70 - 130	0	20
1,2-Dichloroethane	25.0	22.3		ug/L		89	70 - 130	1	20
1,2-Dichloropropane	25.0	23.3		ug/L		93	70 - 130	0	20
1,3,5-Trimethylbenzene	25.0	24.0		ug/L		96	70 - 130	2	20
1,3-Dichlorobenzene	25.0	24.8		ug/L		99	70 - 130	2	20
1,3-Dichloropropane	25.0	23.3		ug/L		93	70 - 130	0	20
1,4-Dichlorobenzene	25.0	24.9		ug/L		100	70 - 130	1	20
1,4-Dioxane	1000	907		ug/L		91	70 - 130	1	20
2,2-Dichloropropane	25.0	22.5		ug/L		90	70 - 130	5	20
2-Butanone (MEK)	125	164	*	ug/L		131	70 - 130	2	20
2-Chlorotoluene	25.0	24.4		ug/L		98	70 - 130	5	20
2-Hexanone	125	117		ug/L		93	70 - 130	0	20
4-Chlorotoluene	25.0	21.2		ug/L		85	70 - 130	2	20
4-Isopropyltoluene	25.0	24.8		ug/L		99	70 - 130	3	20
4-Methyl-2-pentanone (MIBK)	125	117		ug/L		93	70 - 130	1	20
Acetone	125	123		ug/L		99	70 - 130	1	20

Method: 8260C - Volatile Organic Compounds (GC/MS) (Continued)

Lab Sample ID: LCSD 480-108684/5
Matrix: Water
Analysis Batch: 108684

Client Sample ID: Lab Control Sample Dup
Prep Type: Total/NA

Analyte	Spike Added	LCSD Result	LCSD Qualifier	Unit	D	%Rec	%Rec. Limits	RPD	RPD Limit
Benzene	25.0	23.7		ug/L		95	70 - 130	2	20
Bromobenzene	25.0	24.8		ug/L		99	70 - 130	3	20
Bromoform	25.0	23.3		ug/L		93	70 - 130	5	20
Bromomethane	25.0	23.7		ug/L		95	70 - 130	9	20
Carbon disulfide	25.0	24.3		ug/L		97	70 - 130	4	20
Carbon tetrachloride	25.0	23.2		ug/L		93	70 - 130	5	20
Chlorobenzene	25.0	24.4		ug/L		98	70 - 130	4	20
Chlorobromomethane	25.0	25.5		ug/L		102	70 - 130	0	20
Chlorodibromomethane	25.0	24.2		ug/L		97	70 - 130	6	20
Chloroethane	25.0	23.4		ug/L		94	70 - 130	4	20
Chloroform	25.0	22.9		ug/L		92	70 - 130	2	20
Chloromethane	25.0	23.6		ug/L		95	70 - 130	2	20
cis-1,2-Dichloroethene	25.0	24.8		ug/L		99	70 - 130	6	20
cis-1,3-Dichloropropene	25.0	24.0		ug/L		96	70 - 130	2	20
Dichlorobromomethane	25.0	22.7		ug/L		91	70 - 130	0	20
Dichlorodifluoromethane	50.0	62.6		ug/L		125	70 - 130	3	20
Ethyl ether	25.0	24.7		ug/L		99	70 - 130	1	20
Ethylbenzene	25.0	23.9		ug/L		95	70 - 130	5	20
Ethylene Dibromide	25.0	24.5		ug/L		98	70 - 130	3	20
Hexachlorobutadiene	25.0	25.8		ug/L		103	70 - 130	6	20
Isopropyl ether	25.0	25.1		ug/L		101	70 - 130	2	20
Isopropylbenzene	25.0	24.3		ug/L		97	70 - 130	4	20
Methyl tert-butyl ether	25.0	24.0		ug/L		96	70 - 130	0	20
Methylene Chloride	25.0	22.4		ug/L		89	70 - 130	0	20
m-Xylene & p-Xylene	50.0	48.3		ug/L		97	70 - 130	3	20
Naphthalene	25.0	24.8		ug/L		99	70 - 130	0	20
n-Butylbenzene	25.0	24.0		ug/L		96	70 - 130	2	20
N-Propylbenzene	25.0	24.1		ug/L		96	70 - 130	4	20
o-Xylene	25.0	24.5		ug/L		98	70 - 130	5	20
sec-Butylbenzene	25.0	24.5		ug/L		98	70 - 130	3	20
Styrene	25.0	24.3		ug/L		97	70 - 130	3	20
Tert-amyl methyl ether	25.0	24.3		ug/L		97	70 - 130	0	20
Tert-butyl ethyl ether	25.0	24.0		ug/L		96	70 - 130	1	20
tert-Butylbenzene	25.0	25.2		ug/L		101	70 - 130	1	20
Tetrachloroethene	25.0	26.3		ug/L		105	70 - 130	5	20
Tetrahydrofuran	125	119		ug/L		95	70 - 130	3	20
Toluene	25.0	24.2		ug/L		97	70 - 130	4	20
trans-1,2-Dichloroethene	25.0	24.0		ug/L		96	70 - 130	1	20
trans-1,3-Dichloropropene	25.0	23.4		ug/L		94	70 - 130	4	20
Trichloroethene	25.0	24.2		ug/L		97	70 - 130	2	20
Trichlorofluoromethane	25.0	25.2		ug/L		101	70 - 130	2	20
Vinyl chloride	25.0	22.8		ug/L		91	70 - 130	2	20
Dibromomethane	25.0	23.9		ug/L		95	70 - 130	1	20

Surrogate	*LCSD %Recovery*	*LCSD Qualifier*	*Limits*
Toluene-d8 (Surr)	*98*		*70 - 130*
1,2-Dichloroethane-d4 (Surr)	*92*		*70 - 130*
4-Bromofluorobenzene (Surr)	*103*		*70 - 130*

Method: 8260C - Volatile Organic Compounds (GC/MS) (Continued)

Lab Sample ID: MB 480-108964/7
Matrix: Water
Analysis Batch: 108964

Client Sample ID: Method Blank
Prep Type: Total/NA

Analyte	MB Result	MB Qualifier	RL	MDL	Unit	D	Prepared	Analyzed	Dil Fac
1,1,1,2-Tetrachloroethane	ND		1.0		ug/L			03/25/13 11:16	1
1,1,1-Trichloroethane	ND		1.0		ug/L			03/25/13 11:16	1
1,1,2,2-Tetrachloroethane	ND		0.50		ug/L			03/25/13 11:16	1
1,1,2-Trichloroethane	ND		1.0		ug/L			03/25/13 11:16	1
1,1-Dichloroethane	ND		1.0		ug/L			03/25/13 11:16	1
1,1-Dichloroethene	ND		1.0		ug/L			03/25/13 11:16	1
1,1-Dichloropropene	ND		1.0		ug/L			03/25/13 11:16	1
1,2,3-Trichlorobenzene	ND		1.0		ug/L			03/25/13 11:16	1
1,2,3-Trichloropropane	ND		1.0		ug/L			03/25/13 11:16	1
1,2,4-Trichlorobenzene	ND		1.0		ug/L			03/25/13 11:16	1
1,2,4-Trimethylbenzene	ND		1.0		ug/L			03/25/13 11:16	1
1,2-Dibromo-3-Chloropropane	ND		5.0		ug/L			03/25/13 11:16	1
1,2-Dichlorobenzene	ND		1.0		ug/L			03/25/13 11:16	1
1,2-Dichloroethane	ND		1.0		ug/L			03/25/13 11:16	1
1,2-Dichloropropane	ND		1.0		ug/L			03/25/13 11:16	1
1,3,5-Trimethylbenzene	ND		1.0		ug/L			03/25/13 11:16	1
1,3-Dichlorobenzene	ND		1.0		ug/L			03/25/13 11:16	1
1,3-Dichloropropane	ND		1.0		ug/L			03/25/13 11:16	1
1,4-Dichlorobenzene	ND		1.0		ug/L			03/25/13 11:16	1
1,4-Dioxane	ND		50		ug/L			03/25/13 11:16	1
2,2-Dichloropropane	ND		1.0		ug/L			03/25/13 11:16	1
2-Butanone (MEK)	ND		10		ug/L			03/25/13 11:16	1
2-Chlorotoluene	ND		1.0		ug/L			03/25/13 11:16	1
2-Hexanone	ND		10		ug/L			03/25/13 11:16	1
4-Chlorotoluene	ND		1.0		ug/L			03/25/13 11:16	1
4-Isopropyltoluene	ND		1.0		ug/L			03/25/13 11:16	1
4-Methyl-2-pentanone (MIBK)	ND		10		ug/L			03/25/13 11:16	1
Acetone	ND		50		ug/L			03/25/13 11:16	1
Benzene	ND		1.0		ug/L			03/25/13 11:16	1
Bromobenzene	ND		1.0		ug/L			03/25/13 11:16	1
Bromoform	ND		1.0		ug/L			03/25/13 11:16	1
Bromomethane	ND		2.0		ug/L			03/25/13 11:16	1
Carbon disulfide	ND		10		ug/L			03/25/13 11:16	1
Carbon tetrachloride	ND		1.0		ug/L			03/25/13 11:16	1
Chlorobenzene	ND		1.0		ug/L			03/25/13 11:16	1
Chlorobromomethane	ND		1.0		ug/L			03/25/13 11:16	1
Chlorodibromomethane	ND		0.50		ug/L			03/25/13 11:16	1
Chloroethane	ND		2.0		ug/L			03/25/13 11:16	1
Chloroform	ND		1.0		ug/L			03/25/13 11:16	1
Chloromethane	ND		2.0		ug/L			03/25/13 11:16	1
cis-1,2-Dichloroethene	ND		1.0		ug/L			03/25/13 11:16	1
cis-1,3-Dichloropropene	ND		0.40		ug/L			03/25/13 11:16	1
Dichlorobromomethane	ND		0.50		ug/L			03/25/13 11:16	1
Dichlorodifluoromethane	ND		1.0		ug/L			03/25/13 11:16	1
Ethyl ether	ND		1.0		ug/L			03/25/13 11:16	1
Ethylbenzene	ND		1.0		ug/L			03/25/13 11:16	1
Ethylene Dibromide	ND		1.0		ug/L			03/25/13 11:16	1
Hexachlorobutadiene	ND		0.40		ug/L			03/25/13 11:16	1

Method: 8260C - Volatile Organic Compounds (GC/MS) (Continued)

Lab Sample ID: MB 480-108964/7
Matrix: Water
Analysis Batch: 108964

Client Sample ID: Method Blank
Prep Type: Total/NA

Analyte	MB Result	MB Qualifier	RL	MDL	Unit	D	Prepared	Analyzed	Dil Fac
Isopropyl ether	ND		10		ug/L			03/25/13 11:16	1
Isopropylbenzene	ND		1.0		ug/L			03/25/13 11:16	1
Methyl tert-butyl ether	ND		1.0		ug/L			03/25/13 11:16	1
Methylene Chloride	ND		1.0		ug/L			03/25/13 11:16	1
m-Xylene & p-Xylene	ND		2.0		ug/L			03/25/13 11:16	1
Naphthalene	ND		5.0		ug/L			03/25/13 11:16	1
n-Butylbenzene	ND		1.0		ug/L			03/25/13 11:16	1
N-Propylbenzene	ND		1.0		ug/L			03/25/13 11:16	1
o-Xylene	ND		1.0		ug/L			03/25/13 11:16	1
sec-Butylbenzene	ND		1.0		ug/L			03/25/13 11:16	1
Styrene	ND		1.0		ug/L			03/25/13 11:16	1
Tert-amyl methyl ether	ND		5.0		ug/L			03/25/13 11:16	1
Tert-butyl ethyl ether	ND		5.0		ug/L			03/25/13 11:16	1
tert-Butylbenzene	ND		1.0		ug/L			03/25/13 11:16	1
Tetrachloroethene	ND		1.0		ug/L			03/25/13 11:16	1
Tetrahydrofuran	ND		10		ug/L			03/25/13 11:16	1
Toluene	ND		1.0		ug/L			03/25/13 11:16	1
trans-1,2-Dichloroethene	ND		1.0		ug/L			03/25/13 11:16	1
trans-1,3-Dichloropropene	ND		0.40		ug/L			03/25/13 11:16	1
Trichloroethene	ND		1.0		ug/L			03/25/13 11:16	1
Trichlorofluoromethane	ND		1.0		ug/L			03/25/13 11:16	1
Vinyl chloride	ND		0.50		ug/L			03/25/13 11:16	1
Dibromomethane	ND		1.0		ug/L			03/25/13 11:16	1

Surrogate	*MB %Recovery*	*MB Qualifier*	*Limits*	*Prepared*	*Analyzed*	*Dil Fac*
Toluene-d8 (Surr)	*96*		*70 - 130*		*03/25/13 11:16*	*1*
1,2-Dichloroethane-d4 (Surr)	*94*		*70 - 130*		*03/25/13 11:16*	*1*
4-Bromofluorobenzene (Surr)	*99*		*70 - 130*		*03/25/13 11:16*	*1*

Lab Sample ID: LCS 480-108964/4
Matrix: Water
Analysis Batch: 108964

Client Sample ID: Lab Control Sample
Prep Type: Total/NA

Analyte	Spike Added	LCS Result	LCS Qualifier	Unit	D	%Rec	%Rec. Limits
1,1,1,2-Tetrachloroethane	25.0	25.4		ug/L		102	70 - 130
1,1,1-Trichloroethane	25.0	23.3		ug/L		93	70 - 130
1,1,2,2-Tetrachloroethane	25.0	25.2		ug/L		101	70 - 130
1,1,2-Trichloroethane	25.0	24.4		ug/L		98	70 - 130
1,1-Dichloroethane	25.0	24.0		ug/L		96	70 - 130
1,1-Dichloroethene	25.0	25.3		ug/L		101	70 - 130
1,1-Dichloropropene	25.0	24.8		ug/L		99	70 - 130
1,2,3-Trichlorobenzene	25.0	25.8		ug/L		103	70 - 130
1,2,3-Trichloropropane	25.0	25.3		ug/L		101	70 - 130
1,2,4-Trichlorobenzene	25.0	26.7		ug/L		107	70 - 130
1,2,4-Trimethylbenzene	25.0	24.5		ug/L		98	70 - 130
1,2-Dibromo-3-Chloropropane	25.0	27.4		ug/L		110	70 - 130
1,2-Dichlorobenzene	25.0	24.6		ug/L		98	70 - 130
1,2-Dichloroethane	25.0	22.7		ug/L		91	70 - 130

Method: 8260C - Volatile Organic Compounds (GC/MS) (Continued)

Lab Sample ID: LCS 480-108964/4
Matrix: Water
Analysis Batch: 108964

Client Sample ID: Lab Control Sample
Prep Type: Total/NA

Analyte	Spike Added	LCS Result	LCS Qualifier	Unit	D	%Rec	%Rec. Limits
1,2-Dichloropropane	25.0	23.9		ug/L		96	70 - 130
1,3,5-Trimethylbenzene	25.0	24.1		ug/L		97	70 - 130
1,3-Dichlorobenzene	25.0	24.7		ug/L		99	70 - 130
1,3-Dichloropropane	25.0	23.7		ug/L		95	70 - 130
1,4-Dichlorobenzene	25.0	24.8		ug/L		99	70 - 130
1,4-Dioxane	1000	977		ug/L		98	70 - 130
2,2-Dichloropropane	25.0	22.9		ug/L		92	70 - 130
2-Butanone (MEK)	125	173	*	ug/L		138	70 - 130
2-Chlorotoluene	25.0	24.3		ug/L		97	70 - 130
2-Hexanone	125	118		ug/L		94	70 - 130
4-Chlorotoluene	25.0	21.5		ug/L		86	70 - 130
4-Isopropyltoluene	25.0	25.2		ug/L		101	70 - 130
4-Methyl-2-pentanone (MIBK)	125	119		ug/L		95	70 - 130
Acetone	125	116		ug/L		92	70 - 130
Benzene	25.0	24.2		ug/L		97	70 - 130
Bromobenzene	25.0	24.6		ug/L		98	70 - 130
Bromoform	25.0	27.0		ug/L		108	70 - 130
Bromomethane	25.0	21.4		ug/L		86	70 - 130
Carbon disulfide	25.0	24.9		ug/L		100	70 - 130
Carbon tetrachloride	25.0	24.3		ug/L		97	70 - 130
Chlorobenzene	25.0	24.8		ug/L		99	70 - 130
Chlorobromomethane	25.0	26.4		ug/L		106	70 - 130
Chlorodibromomethane	25.0	26.2		ug/L		105	70 - 130
Chloroethane	25.0	23.1		ug/L		92	70 - 130
Chloroform	25.0	23.9		ug/L		96	70 - 130
Chloromethane	25.0	25.2		ug/L		101	70 - 130
cis-1,2-Dichloroethene	25.0	24.4		ug/L		98	70 - 130
cis-1,3-Dichloropropene	25.0	25.3		ug/L		101	70 - 130
Dichlorobromomethane	25.0	24.4		ug/L		98	70 - 130
Dichlorodifluoromethane	50.0	63.9		ug/L		128	70 - 130
Ethyl ether	25.0	25.1		ug/L		101	70 - 130
Ethylbenzene	25.0	23.8		ug/L		95	70 - 130
Ethylene Dibromide	25.0	24.9		ug/L		100	70 - 130
Hexachlorobutadiene	25.0	26.2		ug/L		105	70 - 130
Isopropyl ether	25.0	25.4		ug/L		102	70 - 130
Isopropylbenzene	25.0	24.1		ug/L		96	70 - 130
Methyl tert-butyl ether	25.0	24.8		ug/L		99	70 - 130
Methylene Chloride	25.0	22.9		ug/L		92	70 - 130
m-Xylene & p-Xylene	50.0	49.2		ug/L		98	70 - 130
Naphthalene	25.0	25.2		ug/L		101	70 - 130
n-Butylbenzene	25.0	24.5		ug/L		98	70 - 130
N-Propylbenzene	25.0	24.3		ug/L		97	70 - 130
o-Xylene	25.0	24.2		ug/L		97	70 - 130
sec-Butylbenzene	25.0	25.0		ug/L		100	70 - 130
Styrene	25.0	24.3		ug/L		97	70 - 130
Tert-amyl methyl ether	25.0	25.2		ug/L		101	70 - 130
Tert-butyl ethyl ether	25.0	24.5		ug/L		98	70 - 130
tert-Butylbenzene	25.0	25.5		ug/L		102	70 - 130

Method: 8260C - Volatile Organic Compounds (GC/MS) (Continued)

Lab Sample ID: LCS 480-108964/4
Matrix: Water
Analysis Batch: 108964

Client Sample ID: Lab Control Sample
Prep Type: Total/NA

Analyte	Spike Added	LCS Result	LCS Qualifier	Unit	D	%Rec	%Rec. Limits
Tetrachloroethene	25.0	26.4		ug/L		105	70 - 130
Tetrahydrofuran	125	127		ug/L		101	70 - 130
Toluene	25.0	24.1		ug/L		96	70 - 130
trans-1,2-Dichloroethene	25.0	24.8		ug/L		99	70 - 130
trans-1,3-Dichloropropene	25.0	24.7		ug/L		99	70 - 130
Trichloroethene	25.0	25.1		ug/L		100	70 - 130
Trichlorofluoromethane	25.0	25.5		ug/L		102	70 - 130
Vinyl chloride	25.0	23.7		ug/L		95	70 - 130
Dibromomethane	25.0	24.6		ug/L		98	70 - 130

Surrogate	*LCS %Recovery*	*LCS Qualifier*	*Limits*
Toluene-d8 (Surr)	*96*		*70 - 130*
1,2-Dichloroethane-d4 (Surr)	*90*		*70 - 130*
4-Bromofluorobenzene (Surr)	*102*		*70 - 130*

Lab Sample ID: LCSD 480-108964/5
Matrix: Water
Analysis Batch: 108964

Client Sample ID: Lab Control Sample Dup
Prep Type: Total/NA

Analyte	Spike Added	LCSD Result	LCSD Qualifier	Unit	D	%Rec	%Rec. Limits	RPD	RPD Limit
1,1,1,2-Tetrachloroethane	25.0	24.3		ug/L		97	70 - 130	4	20
1,1,1-Trichloroethane	25.0	23.0		ug/L		92	70 - 130	1	20
1,1,2,2-Tetrachloroethane	25.0	25.1		ug/L		100	70 - 130	0	20
1,1,2-Trichloroethane	25.0	23.5		ug/L		94	70 - 130	4	20
1,1-Dichloroethane	25.0	23.2		ug/L		93	70 - 130	3	20
1,1-Dichloroethene	25.0	23.2		ug/L		93	70 - 130	9	20
1,1-Dichloropropene	25.0	23.8		ug/L		95	70 - 130	4	20
1,2,3-Trichlorobenzene	25.0	26.5		ug/L		106	70 - 130	3	20
1,2,3-Trichloropropane	25.0	24.4		ug/L		98	70 - 130	4	20
1,2,4-Trichlorobenzene	25.0	26.8		ug/L		107	70 - 130	0	20
1,2,4-Trimethylbenzene	25.0	23.4		ug/L		94	70 - 130	4	20
1,2-Dibromo-3-Chloropropane	25.0	26.4		ug/L		105	70 - 130	4	20
1,2-Dichlorobenzene	25.0	24.5		ug/L		98	70 - 130	0	20
1,2-Dichloroethane	25.0	22.6		ug/L		90	70 - 130	0	20
1,2-Dichloropropane	25.0	24.0		ug/L		96	70 - 130	0	20
1,3,5-Trimethylbenzene	25.0	23.6		ug/L		94	70 - 130	2	20
1,3-Dichlorobenzene	25.0	24.4		ug/L		98	70 - 130	1	20
1,3-Dichloropropane	25.0	23.0		ug/L		92	70 - 130	3	20
1,4-Dichlorobenzene	25.0	24.6		ug/L		98	70 - 130	1	20
1,4-Dioxane	1000	992		ug/L		99	70 - 130	2	20
2,2-Dichloropropane	25.0	23.0		ug/L		92	70 - 130	0	20
2-Butanone (MEK)	125	172	*	ug/L		138	70 - 130	1	20
2-Chlorotoluene	25.0	23.5		ug/L		94	70 - 130	3	20
2-Hexanone	125	116		ug/L		93	70 - 130	2	20
4-Chlorotoluene	25.0	20.9		ug/L		83	70 - 130	3	20
4-Isopropyltoluene	25.0	24.3		ug/L		97	70 - 130	3	20
4-Methyl-2-pentanone (MIBK)	125	116		ug/L		93	70 - 130	2	20
Acetone	125	114		ug/L		92	70 - 130	1	20

Method: 8260C - Volatile Organic Compounds (GC/MS) (Continued)

Lab Sample ID: LCSD 480-108964/5
Matrix: Water
Analysis Batch: 108964

Client Sample ID: Lab Control Sample Dup
Prep Type: Total/NA

Analyte	Spike Added	LCSD Result	LCSD Qualifier	Unit	D	%Rec	%Rec. Limits	RPD	RPD Limit
Benzene	25.0	23.7		ug/L		95	70 - 130	2	20
Bromobenzene	25.0	24.3		ug/L		97	70 - 130	1	20
Bromoform	25.0	26.7		ug/L		107	70 - 130	1	20
Bromomethane	25.0	24.0		ug/L		96	70 - 130	11	20
Carbon disulfide	25.0	24.0		ug/L		96	70 - 130	4	20
Carbon tetrachloride	25.0	23.8		ug/L		95	70 - 130	2	20
Chlorobenzene	25.0	24.0		ug/L		96	70 - 130	3	20
Chlorobromomethane	25.0	25.6		ug/L		102	70 - 130	3	20
Chlorodibromomethane	25.0	25.1		ug/L		100	70 - 130	4	20
Chloroethane	25.0	23.4		ug/L		94	70 - 130	2	20
Chloroform	25.0	23.0		ug/L		92	70 - 130	4	20
Chloromethane	25.0	23.7		ug/L		95	70 - 130	6	20
cis-1,2-Dichloroethene	25.0	24.6		ug/L		98	70 - 130	1	20
cis-1,3-Dichloropropene	25.0	25.0		ug/L		100	70 - 130	1	20
Dichlorobromomethane	25.0	24.1		ug/L		96	70 - 130	1	20
Dichlorodifluoromethane	50.0	59.8		ug/L		120	70 - 130	7	20
Ethyl ether	25.0	25.0		ug/L		100	70 - 130	1	20
Ethylbenzene	25.0	23.0		ug/L		92	70 - 130	4	20
Ethylene Dibromide	25.0	24.3		ug/L		97	70 - 130	2	20
Hexachlorobutadiene	25.0	26.3		ug/L		105	70 - 130	0	20
Isopropyl ether	25.0	25.4		ug/L		102	70 - 130	0	20
Isopropylbenzene	25.0	23.5		ug/L		94	70 - 130	2	20
Methyl tert-butyl ether	25.0	24.7		ug/L		99	70 - 130	0	20
Methylene Chloride	25.0	22.7		ug/L		91	70 - 130	1	20
m-Xylene & p-Xylene	50.0	46.9		ug/L		94	70 - 130	5	20
Naphthalene	25.0	25.7		ug/L		103	70 - 130	2	20
n-Butylbenzene	25.0	23.8		ug/L		95	70 - 130	3	20
N-Propylbenzene	25.0	23.5		ug/L		94	70 - 130	4	20
o-Xylene	25.0	23.7		ug/L		95	70 - 130	2	20
sec-Butylbenzene	25.0	23.8		ug/L		95	70 - 130	5	20
Styrene	25.0	23.7		ug/L		95	70 - 130	2	20
Tert-amyl methyl ether	25.0	25.0		ug/L		100	70 - 130	1	20
Tert-butyl ethyl ether	25.0	24.2		ug/L		97	70 - 130	2	20
tert-Butylbenzene	25.0	24.8		ug/L		99	70 - 130	3	20
Tetrachloroethene	25.0	25.6		ug/L		102	70 - 130	3	20
Tetrahydrofuran	125	127		ug/L		102	70 - 130	1	20
Toluene	25.0	23.5		ug/L		94	70 - 130	2	20
trans-1,2-Dichloroethene	25.0	24.2		ug/L		97	70 - 130	3	20
trans-1,3-Dichloropropene	25.0	23.8		ug/L		95	70 - 130	4	20
Trichloroethene	25.0	24.3		ug/L		97	70 - 130	3	20
Trichlorofluoromethane	25.0	24.8		ug/L		99	70 - 130	3	20
Vinyl chloride	25.0	23.0		ug/L		92	70 - 130	3	20
Dibromomethane	25.0	24.8		ug/L		99	70 - 130	1	20

Surrogate	*LCSD %Recovery*	*LCSD Qualifier*	*Limits*
Toluene-d8 (Surr)	*96*		*70 - 130*
1,2-Dichloroethane-d4 (Surr)	*92*		*70 - 130*
4-Bromofluorobenzene (Surr)	*102*		*70 - 130*

QC Association Summary

Client: ERM-Northeast
Project/Site: IDS Wayland

TestAmerica Job ID: 480-34804-1

GC/MS VOA

Analysis Batch: 108684

Lab Sample ID	Client Sample ID	Prep Type	Matrix	Method	Prep Batch
480-34804-1	MW217D-20130321-01	Total/NA	Water	8260C	
480-34804-2	MW217S-20130321-01	Total/NA	Water	8260C	
480-34804-3	MW217M-20130321-01	Total/NA	Water	8260C	
LCS 480-108684/4	Lab Control Sample	Total/NA	Water	8260C	
LCSD 480-108684/5	Lab Control Sample Dup	Total/NA	Water	8260C	
MB 480-108684/7	Method Blank	Total/NA	Water	8260C	

Analysis Batch: 108964

Lab Sample ID	Client Sample ID	Prep Type	Matrix	Method	Prep Batch
480-34804-3 - DL	MW217M-20130321-01	Total/NA	Water	8260C	
LCS 480-108964/4	Lab Control Sample	Total/NA	Water	8260C	
LCSD 480-108964/5	Lab Control Sample Dup	Total/NA	Water	8260C	
MB 480-108964/7	Method Blank	Total/NA	Water	8260C	

Lab Chronicle

Client: ERM-Northeast
Project/Site: IDS Wayland

TestAmerica Job ID: 480-34804-1

Client Sample ID: MW217D-20130321-01

Lab Sample ID: 480-34804-1

Date Collected: 03/21/13 09:20
Matrix: Water
Date Received: 03/22/13 12:30

Prep Type	Batch Type	Batch Method	Run	Dilution Factor	Batch Number	Prepared or Analyzed	Analyst	Lab
Total/NA	Analysis	8260C		1	108684	03/22/13 15:41	LH	TAL BUF

Client Sample ID: MW217S-20130321-01

Lab Sample ID: 480-34804-2

Date Collected: 03/21/13 11:45
Matrix: Water
Date Received: 03/22/13 12:30

Prep Type	Batch Type	Batch Method	Run	Dilution Factor	Batch Number	Prepared or Analyzed	Analyst	Lab
Total/NA	Analysis	8260C		1	108684	03/22/13 16:05	LH	TAL BUF

Client Sample ID: MW217M-20130321-01

Lab Sample ID: 480-34804-3

Date Collected: 03/21/13 10:30
Matrix: Water
Date Received: 03/22/13 12:30

Prep Type	Batch Type	Batch Method	Run	Dilution Factor	Batch Number	Prepared or Analyzed	Analyst	Lab
Total/NA	Analysis	8260C		1	108684	03/22/13 16:29	LH	TAL BUF
Total/NA	Analysis	8260C	DL	4	108964	03/25/13 12:34	RL	TAL BUF

Laboratory References:

TAL BUF = TestAmerica Buffalo, 10 Hazelwood Drive, Amherst, NY 14228-2298, TEL (716)691-2600

Certification Summary

Client: ERM-Northeast
Project/Site: IDS Wayland

TestAmerica Job ID: 480-34804-1

Laboratory: TestAmerica Buffalo

All certifications held by this laboratory are listed. Not all certifications are applicable to this report.

Authority	Program	EPA Region	Certification ID	Expiration Date
Arkansas DEQ	State Program	6	88-0686	07-06-13
California	NELAP	9	1169CA	09-30-13
Connecticut	State Program	1	PH-0568	09-30-14
Florida	NELAP	4	E87672	06-30-13
Georgia	State Program	4	N/A	03-31-13
Georgia	State Program	4	956	06-30-13
Georgia	State Program	4	956	06-30-13
Illinois	NELAP	5	200003	09-30-13
Iowa	State Program	7	374	03-01-13
Kansas	NELAP	7	E-10187	01-31-14
Kentucky	State Program	4	90029	12-31-13
Kentucky (UST)	State Program	4	30	04-01-13
Louisiana	NELAP	6	02031	06-30-13
Maine	State Program	1	NY00044	12-04-13
Maryland	State Program	3	294	03-31-13
Massachusetts	State Program	1	M-NY044	06-30-13
Michigan	State Program	5	9937	04-01-13
Minnesota	NELAP	5	036-999-337	12-31-13
New Hampshire	NELAP	1	2973	09-11-13
New Hampshire	NELAP	1	2337	11-17-13
New Jersey	NELAP	2	NY455	06-30-13
New York	NELAP	2	10026	03-31-13
North Dakota	State Program	8	R-176	03-31-13
Oklahoma	State Program	6	9421	08-31-13
Oregon	NELAP	10	NY200003	06-09-13
Pennsylvania	NELAP	3	68-00281	07-31-13
Rhode Island	State Program	1	LAO00328	12-31-13
Tennessee	State Program	4	TN02970	04-01-13
Texas	NELAP	6	T104704412-11-2	07-31-13
USDA	Federal		P330-11-00386	11-22-14
Virginia	NELAP	3	460185	09-14-13
Washington	State Program	10	C784	02-10-14
West Virginia DEP	State Program	3	252	09-30-13
Wisconsin	State Program	5	998310390	08-31-13

Method Summary

Client: ERM-Northeast
Project/Site: IDS Wayland

TestAmerica Job ID: 480-34804-1

Method	Method Description	Protocol	Laboratory
8260C	Volatile Organic Compounds (GC/MS)	MA DEP	TAL BUF

Protocol References:

MA DEP = Massachusetts Department Of Environmental Protection

Laboratory References:

TAL BUF = TestAmerica Buffalo, 10 Hazelwood Drive, Amherst, NY 14228-2298, TEL (716)691-2600

Sample Summary

Client: ERM-Northeast
Project/Site: IDS Wayland

TestAmerica Job ID: 480-34804-1

Lab Sample ID	Client Sample ID	Matrix	Collected	Received
480-34804-1	MW217D-20130321-01	Water	03/21/13 09:20	03/22/13 12:30
480-34804-2	MW217S-20130321-01	Water	03/21/13 11:45	03/22/13 12:30
480-34804-3	MW217M-20130321-01	Water	03/21/13 10:30	03/22/13 12:30

Login Sample Receipt Checklist

Client: ERM-Northeast

Job Number: 480-34804-1

Login Number: 34804
List Number: 1
Creator: Kolb, Chris M

List Source: TestAmerica Buffalo

Question	Answer	Comment
Radioactivity either was not measured or, if measured, is at or below background	N/A	
The cooler's custody seal, if present, is intact.	True	
The cooler or samples do not appear to have been compromised or tampered with.	True	
Samples were received on ice.	True	
Cooler Temperature is acceptable.	True	
Cooler Temperature is recorded.	True	
COC is present.	True	
COC is filled out in ink and legible.	True	
COC is filled out with all pertinent information.	True	
Is the Field Sampler's name present on COC?	True	
There are no discrepancies between the sample IDs on the containers and the COC.	True	
Samples are received within Holding Time.	True	
Sample containers have legible labels.	True	
Containers are not broken or leaking.	True	
Sample collection date/times are provided.	True	
Appropriate sample containers are used.	True	
Sample bottles are completely filled.	True	
Sample Preservation Verified	True	
There is sufficient vol. for all requested analyses, incl. any requested MS/MSDs	True	
VOA sample vials do not have headspace or bubble is <6mm (1/4") in diameter.	True	
If necessary, staff have been informed of any short hold time or quick TAT needs	True	
Multiphasic samples are not present.	True	
Samples do not require splitting or compositing.	True	
Sampling Company provided.	True	
Samples received within 48 hours of sampling.	True	
Samples requiring field filtration have been filtered in the field.	True	
Chlorine Residual checked.	N/A	

TestAmerica Westfield
Westfield Executive Park 53 Southampton Road
Westfield, MA 01085
Phone (413) 572-4000 Fax (413) 572-3707

Boston Service Center
240 Bear Hill Rd. Suite 104
Waltham, MA 02451
Phone (781) 466-6900 Fax (781) 466-6901

Chain of Custody Record

TestAmerica
THE LEADER IN ENVIRONMENTAL TESTING

Client Information	Sampler: Stacey Bragg	Lab PM:	Carrier Tracking No(s):	COC No: 22859
Client Contact: Jason Flattery	Phone: 978-875-0426	E-Mail:		Page: 1/1
Company: ERM				Job #: 480-34800
Address: 1 Beacon St, 5th Floor	Due Date Requested:			
City: Boston	TAT Requested (days):			
State, Zip: MA 02108				
Phone: 1-617-447-0757	Quote #:			
Email: Jason.Flattery@erm.com	PO #:			
Project Name/number: Raytheon Wayland	WO #:			
Site: Wayland	SSOW#:			

Analysis Requested

Preservation Codes:
A - HCL, B - NaOH, C - Zn Acetate, D - Nitric Acid, E - NaHSO4, F - MeOH, H - Ascorbic Acid, I - Ice, J - DI Water, M - Hexane, N - None, P - Na2O4S, Q - Na2SO3, R - Na2S2SO3, S - H2SO4, Z - other (specify)

Regulatory programs:
MCP [X] GW1/S1 [ ]
RCP [ ] CT RSR [ ]
DEP Form [ ] EDD Required [ ]

Sample Identification	Sample Date	Sample Time	Sample Type (C=comp, G=grab)	Matrix (W=water, S=solid, O=waste/oil, BT=Tissue, A=Air)	Sampler's Initials	Field Filtered Sample?	Perform MS/MSD?	8260MCP	8260SIM	Total Number of containers	Special Instructions/Note:
			Preservation Code:								
MW217D-20130321-01	3/21/13	9:20		W	SC			3			
MW217S-20130321-01	3/21/13	11:45		W	SC			3			
MW217M-20130321-01	3/21/13	10:30		W	SC			3			

Possible Hazard Identification
[X] Non-Hazard [ ] Flammable [ ] Skin Irritant [ ] Poison B [ ] Unknown [ ] Radiological

Sample Disposal (A fee may be assessed if samples are retained longer than 1 month)
[ ] Return To Client [X] Disposal By Lab [ ] Archive For ____ Months

Deliverable Requested: I, II, III, IV, Other (specify)

Special Instructions/QC Requirements:

Relinquished by:	Date/Time:	Company	Received by:	Date/Time:	Company
[signature]	3/21/13 15:20	ERM	[signature]	3/21/13 1520	TAL
[signature]	3/21/13 1630	TAL	[signature]	3/22/13 1230	TA
Relinquished by:	Date/Time:	Company	Received by:	Date/Time:	Company

Custody Seals Intact: Δ Yes Δ No
Custody Seal No.:
Cooler Temperature(s) °C and Other Remarks: 0.8 IR #1

TAL-8245-360 1111

TestAmerica

THE LEADER IN ENVIRONMENTAL TESTING

ANALYTICAL REPORT

TestAmerica Laboratories, Inc.
TestAmerica Buffalo
10 Hazelwood Drive
Amherst, NY 14228-2298
Tel: (716)691-2600

TestAmerica Job ID: 480-34808-1
Client Project/Site: IDS Wayland

For:
ERM-Northeast
One Beacon Steet
5th Floor
Boston, Massachusetts 02108

Attn: Jason Flattery

Authorized for release by:
3/29/2013 5:17:54 PM
Steve Hartmann
Lab Director
steve.hartmann@testamericainc.com

Designee for

Becky Mason
Project Manager II
becky.mason@testamericainc.com

LINKS

Review your project results through TotalAccess

Have a Question? Ask The Expert

Visit us at: www.testamericainc.com

The test results in this report meet all 2003 NELAC and 2009 TNI requirements for accredited parameters, exceptions are noted in this report. This report may not be reproduced except in full, and with written approval from the laboratory. For questions please contact the Project Manager at the e-mail address or telephone number listed on this page.

This report has been electronically signed and authorized by the signatory. Electronic signature is intended to be the legally binding equivalent of a traditionally handwritten signature.

Results relate only to the items tested and the sample(s) as received by the laboratory.

Table of Contents

Cover Page 1
Table of Contents 2
Definitions/Glossary 3
Case Narrative 4
Detection Summary 7
Client Sample Results 8
Surrogate Summary 22
QC Sample Results 24
QC Association Summary 44
Lab Chronicle 45
Certification Summary 47
Method Summary 49
Sample Summary 50
Receipt Checklists 51
Chain of Custody 53

Qualifiers

GC/MS VOA

Qualifier	Qualifier Description
*	LCS or LCSD exceeds the control limits
F	MS or MSD exceeds the control limits
4	MS, MSD: The analyte present in the original sample is 4 times greater than the matrix spike concentration; therefore, control limits are not applicable.
E	Result exceeded calibration range.

Glossary

Abbreviation	These commonly used abbreviations may or may not be present in this report.
¤	Listed under the "D" column to designate that the result is reported on a dry weight basis
%R	Percent Recovery
CNF	Contains no Free Liquid
DER	Duplicate error ratio (normalized absolute difference)
DL, RA, RE, IN	Indicates a Dilution, Re-analysis, Re-extraction, or additional Initial metals/anion analysis of the sample
DLC	Decision level concentration
MDA	Minimum detectable activity
EDL	Estimated Detection Limit
MDC	Minimum detectable concentration
MDL	Method Detection Limit
ML	Minimum Level (Dioxin)
ND	Not detected at the reporting limit (or MDL or EDL if shown)
PQL	Practical Quantitation Limit
QC	Quality Control
RER	Relative error ratio
RL	Reporting Limit or Requested Limit (Radiochemistry)
RPD	Relative Percent Difference, a measure of the relative difference between two points
TEF	Toxicity Equivalent Factor (Dioxin)
TEQ	Toxicity Equivalent Quotient (Dioxin)

Job ID: 480-34808-1

Laboratory: TestAmerica Buffalo

Narrative

With the exceptions noted as flags or footnotes, standard analytical protocols were followed in the analysis of the samples and no problems were encountered or anomalies observed. In addition all laboratory quality control samples were within established control limits, with any exceptions noted below. Each sample was analyzed to achieve the lowest possible reporting limit within the constraints of the method. In some cases, due to interference or analytes present at high concentrations, samples were diluted. For diluted samples, the reporting limits are adjusted relative to the dilution required.

Calculations are performed before rounding to avoid round-off errors in calculated results.

All holding times were met and proper preservation noted for the methods performed on these samples, unless otherwise detailed in the individual sections below.

RECEIPT

The samples were received on 03/22/2013; the samples arrived in good condition, properly preserved and on ice. The temperature of the coolers at receipt was 0.8 C.

1,4-DIOXANE (SIM)

Sample MW1025D-20130321-01 (480-34808-7) was analyzed for 1,4-Dioxane (SIM) in accordance with EPA 522 MOD. The samples were prepared and analyzed on 03/27/2013.

No difficulties were encountered during the 1,4-Dioxane (SIM) analysis.

All quality control parameters were within the acceptance limits.

VOLATILE ORGANIC COMPOUNDS (GC-MS SIM)

Sample MW1025D-20130321-01 (480-34808-7) was analyzed for volatile organic compounds (GC-MS SIM) in accordance with EPA SW-846 Method 8260B SIM. The samples were analyzed on 03/25/2013.

No difficulties were encountered during the VOA SIM analysis.

All quality control parameters were within the acceptance limits.

VOLATILE ORGANIC COMPOUNDS (GC-MS)

Samples MW1031-20130321-01 (480-34808-1), MW1009-20130321-01 (480-34808-2), MW1001M-20130321-01 (480-34808-3), MW1001B-20130321-01 (480-34808-4), MW1004-20130321-01 (480-34808-5), DUP004-20130321-01 (480-34808-6), MW1025D-20130321-01 (480-34808-7) and TB002-20130321-01 (480-34808-8) were analyzed for volatile organic compounds (GC-MS) in accordance with SW846 8260C. The samples were analyzed on 03/22/2013 and 03/25/2013.

The continuing calibration verification (CCV) for Bromoform associated with batch 108684, 2-Butanone, 2-Hexanone, 4-Methyl 2 Pentanone, Chloromethane and Tetrahydrofuran associated with batch 108960, and Isopropyl Ether associated with batch 108690 recovered above the MCP upper control limit. MCP protocol allows for 20% of the target compounds to be outside the 20% difference but not over 40% difference.

2-Butanone (MEK) failed the recovery criteria high for LCS/LCSD in batch 480-108684. Dichlorodifluoromethane failed the recovery criteria high for LCS 480-108686/4. Chloromethane failed the recovery criteria low for LCS 480-108960/4. Chloromethane failed the recovery criteria low for LCSD 480-108960/5. Refer to the QC report for details.

Dichlorodifluoromethane and Trichlorofluoromethane failed the recovery criteria high for the MS/MSD of sample MW1025D-20130321-01 (480-34808-7) in batch 480-108686. Refer to the QC report for details.

Sample MW1025D-20130321-01 (480-34808-7)[2X] required dilution prior to analysis to bring the concentration of target analytes within the calibration range. The reporting limits have been adjusted accordingly.

With the exception of diluted samples, per question G on the MassDEP Analytical Protocol Certification Form, TestAmerica's routine reporting limits do not achieve the CAM reporting limits specified in this CAM protocol for 1,2-dibromo-3-chloropropane, Carbon Disulfide, Isopropyl Ether, Naphthalene, tert-Butyl Ethyl Ether, tert-Amyl Methyl Ether, & Tetrahydrofuran.

Job ID: 480-34808-1 (Continued)

Laboratory: TestAmerica Buffalo (Continued)

No other difficulties were encountered during the volatile organic compounds (GC-MS) analyses.

All other quality control parameters were within the acceptance limits.

MassDEP Analytical Protocol Certification Form

Laboratory Name: **TestAmerica Buffalo** Project #: **480-34808**

Project Location: **Wayland** RTN:

This form provides certifications for the following data set: list Laboratory Sample ID Number(s):

480-34808-[1-8]

Matrices: [X] Groundwater/Surface Water [ ] Soil/Sediment [ ] Drinking Water [ ] Air [ ] Other:

CAM Protocols (check all that apply below):

8260 VOC CAM II A [X]	7470/7471 Hg CAM III B [ ]	Mass DEP VPH CAM IV A [ ]	8081 Pesticides CAM V B [ ]	7196 Hex Cr CAM VI B [ ]	Mass DEP APH CAM IX A [ ]
8270 SVOC CAM II B [ ]	7010 Metals CAM III C [ ]	Mass DEP EPH CAM IV B [ ]	8151 Herbicides CAM V C [ ]	8330 Explosives CAM VIII A [ ]	TO-15 VOC CAM IX B [ ]
6010 Metals CAM III A [ ]	6020 Metals CAM III D [ ]	8082 PCB CAM V A [ ]	9014 Total Cyanide/PAC CAM VI A [ ]	6860 Perchlorate CAM VIII B [ ]	

Affirmative Responses to Questions A through F are required for "Presumptive Certainty" status

A	Were all samples received in a condition consistent with those described on the Chain-of-Custody, properly preserved (including temperature) in the field or laboratory, and prepared/analyzed within method holding time.	[X] Yes [ ] No
B	Were the analytical method(s) and all associated QC requirements specified in the selected CAM protocol(s) followed?	[X] Yes [ ] No
C	Were all required corrective actions and analytical response actions specified in the selected CAM protocol(s) implemented for all identified performance standard non-conformances?	[X] Yes [ ] No
D	Does the laboratory report comply with all the reporting requirements specified in CAM VII A, "Quality Assurance and Quality Control Guidelines for the Acquisition and Reporting of Analytical Data"?	[X] Yes [ ] No
E	a. VPH, EPH and APH Methods only: Was each method conducted without significant modification(s)? (Refer to the individual method(s) for a list of significant modifications). b. APH and TO-15 Methods only: Was the complete analyte list reported for each method?	[ ] Yes [ ] No [ ] Yes [ ] No
F	Were all applicable CAM protocol QC and performance standard non-conformances identified and evaluated in a laboratory narrative (including all "No" responses to Questions A through E)?	[X] Yes [ ] No

Responses to Questions G, H and I below are required for "Presumptive Certainty" status

G	Were the reporting limits at or below all CAM reporting limits specified in the selected CAM protocol(s)?	[ ] Yes [X] No[1]

***Data User Note:* Data that achieve "Presumptive Certainty" status may not necessarily meet the data usability and representativeness requirements described in 310 CMR 40. 1056 (2)(k) and WCS-07-350**

H	Were **all** QC performance standards specified in the CAM protocol(s) achieved?	[ ] Yes [X] No[1]
I	Were results reported for the complete analyte list specified in the selected CAM protocol(s) ?	[X] Yes [ ] No[1]

[1] All negative responses must be addressed in an attached laboratory narrative.

I, the undersigned, attest under the pains and penalties of perjury that, based upon my personal inquiry of those responsible for obtaining the information, the material contained in this analytical report is, to the best of my knowledge and belief, is accurate and complete.

Signature: Position: Service Center Manager/Lab Director-TestAmerica Westfield

Printed Name: Steven C. Hartmann Date: 3/29/13 17:15

This form has been electronically signed and approved

Detection Summary

Client: ERM-Northeast
Project/Site: IDS Wayland

TestAmerica Job ID: 480-34808-1

Client Sample ID: MW1031-20130321-01 — Lab Sample ID: 480-34808-1

Analyte	Result	Qualifier	RL	MDL	Unit	Dil Fac	D	Method	Prep Type
Methyl tert-butyl ether	1.1		1.0		ug/L	1		8260C	Total/NA
Trichloroethene	2.3		1.0		ug/L	1		8260C	Total/NA

Client Sample ID: MW1009-20130321-01 — Lab Sample ID: 480-34808-2

Analyte	Result	Qualifier	RL	MDL	Unit	Dil Fac	D	Method	Prep Type
1,2-Dichlorobenzene	2.0		1.0		ug/L	1		8260C	Total/NA
1,4-Dichlorobenzene	1.0		1.0		ug/L	1		8260C	Total/NA
Benzene	1.5		1.0		ug/L	1		8260C	Total/NA
cis-1,2-Dichloroethene	2.2		1.0		ug/L	1		8260C	Total/NA
Trichloroethene	1.9		1.0		ug/L	1		8260C	Total/NA

Client Sample ID: MW1001M-20130321-01 — Lab Sample ID: 480-34808-3

Analyte	Result	Qualifier	RL	MDL	Unit	Dil Fac	D	Method	Prep Type
cis-1,2-Dichloroethene	11		1.0		ug/L	1		8260C	Total/NA
Trichloroethene	8.2		1.0		ug/L	1		8260C	Total/NA

Client Sample ID: MW1001B-20130321-01 — Lab Sample ID: 480-34808-4

No Detections.

Client Sample ID: MW1004-20130321-01 — Lab Sample ID: 480-34808-5

No Detections.

Client Sample ID: DUP004-20130321-01 — Lab Sample ID: 480-34808-6

Analyte	Result	Qualifier	RL	MDL	Unit	Dil Fac	D	Method	Prep Type
Trichloroethene	1.9		1.0		ug/L	1		8260C	Total/NA

Client Sample ID: MW1025D-20130321-01 — Lab Sample ID: 480-34808-7

Analyte	Result	Qualifier	RL	MDL	Unit	Dil Fac	D	Method	Prep Type
cis-1,2-Dichloroethene	17		1.0		ug/L	1		8260C	Total/NA
Trichloroethene - DL	110		2.0		ug/L	2		8260C	Total/NA
1,4-Dioxane	0.31		0.20		ug/L	1		522 MOD	Total/NA

Client Sample ID: TB002-20130321-01 — Lab Sample ID: 480-34808-8

No Detections.

This Detection Summary does not include radiochemical test results.

Client Sample ID: MW1031-20130321-01
Date Collected: 03/21/13 09:00
Date Received: 03/22/13 12:30

Lab Sample ID: 480-34808-1
Matrix: Water

Method: 8260C - Volatile Organic Compounds (GC/MS)

Analyte	Result	Qualifier	RL	MDL	Unit	D	Prepared	Analyzed	Dil Fac
1,1,1,2-Tetrachloroethane	ND		1.0		ug/L			03/22/13 16:53	1
1,1,1-Trichloroethane	ND		1.0		ug/L			03/22/13 16:53	1
1,1,2,2-Tetrachloroethane	ND		0.50		ug/L			03/22/13 16:53	1
1,1,2-Trichloroethane	ND		1.0		ug/L			03/22/13 16:53	1
1,1-Dichloroethane	ND		1.0		ug/L			03/22/13 16:53	1
1,1-Dichloroethene	ND		1.0		ug/L			03/22/13 16:53	1
1,1-Dichloropropene	ND		1.0		ug/L			03/22/13 16:53	1
1,2,3-Trichlorobenzene	ND		1.0		ug/L			03/22/13 16:53	1
1,2,3-Trichloropropane	ND		1.0		ug/L			03/22/13 16:53	1
1,2,4-Trichlorobenzene	ND		1.0		ug/L			03/22/13 16:53	1
1,2,4-Trimethylbenzene	ND		1.0		ug/L			03/22/13 16:53	1
1,2-Dibromo-3-Chloropropane	ND		5.0		ug/L			03/22/13 16:53	1
1,2-Dichlorobenzene	ND		1.0		ug/L			03/22/13 16:53	1
1,2-Dichloroethane	ND		1.0		ug/L			03/22/13 16:53	1
1,2-Dichloropropane	ND		1.0		ug/L			03/22/13 16:53	1
1,3,5-Trimethylbenzene	ND		1.0		ug/L			03/22/13 16:53	1
1,3-Dichlorobenzene	ND		1.0		ug/L			03/22/13 16:53	1
1,3-Dichloropropane	ND		1.0		ug/L			03/22/13 16:53	1
1,4-Dichlorobenzene	ND		1.0		ug/L			03/22/13 16:53	1
1,4-Dioxane	ND		50		ug/L			03/22/13 16:53	1
2,2-Dichloropropane	ND		1.0		ug/L			03/22/13 16:53	1
2-Butanone (MEK)	ND	*	10		ug/L			03/22/13 16:53	1
2-Chlorotoluene	ND		1.0		ug/L			03/22/13 16:53	1
2-Hexanone	ND		10		ug/L			03/22/13 16:53	1
4-Chlorotoluene	ND		1.0		ug/L			03/22/13 16:53	1
4-Isopropyltoluene	ND		1.0		ug/L			03/22/13 16:53	1
4-Methyl-2-pentanone (MIBK)	ND		10		ug/L			03/22/13 16:53	1
Acetone	ND		50		ug/L			03/22/13 16:53	1
Benzene	ND		1.0		ug/L			03/22/13 16:53	1
Bromobenzene	ND		1.0		ug/L			03/22/13 16:53	1
Bromoform	ND		1.0		ug/L			03/22/13 16:53	1
Bromomethane	ND		2.0		ug/L			03/22/13 16:53	1
Carbon disulfide	ND		10		ug/L			03/22/13 16:53	1
Carbon tetrachloride	ND		1.0		ug/L			03/22/13 16:53	1
Chlorobenzene	ND		1.0		ug/L			03/22/13 16:53	1
Chlorobromomethane	ND		1.0		ug/L			03/22/13 16:53	1
Chlorodibromomethane	ND		0.50		ug/L			03/22/13 16:53	1
Chloroethane	ND		2.0		ug/L			03/22/13 16:53	1
Chloroform	ND		1.0		ug/L			03/22/13 16:53	1
Chloromethane	ND		2.0		ug/L			03/22/13 16:53	1
cis-1,2-Dichloroethene	ND		1.0		ug/L			03/22/13 16:53	1
cis-1,3-Dichloropropene	ND		0.40		ug/L			03/22/13 16:53	1
Dichlorobromomethane	ND		0.50		ug/L			03/22/13 16:53	1
Dichlorodifluoromethane	ND		1.0		ug/L			03/22/13 16:53	1
Ethyl ether	ND		1.0		ug/L			03/22/13 16:53	1
Ethylbenzene	ND		1.0		ug/L			03/22/13 16:53	1
Ethylene Dibromide	ND		1.0		ug/L			03/22/13 16:53	1
Hexachlorobutadiene	ND		0.40		ug/L			03/22/13 16:53	1
Isopropyl ether	ND		10		ug/L			03/22/13 16:53	1

Client Sample ID: MW1031-20130321-01

Lab Sample ID: 480-34808-1

Date Collected: 03/21/13 09:00

Matrix: Water

Date Received: 03/22/13 12:30

Method: 8260C - Volatile Organic Compounds (GC/MS) (Continued)

Analyte	Result	Qualifier	RL	MDL	Unit	D	Prepared	Analyzed	Dil Fac
Isopropylbenzene	ND		1.0		ug/L			03/22/13 16:53	1
Methyl tert-butyl ether	**1.1**		1.0		ug/L			03/22/13 16:53	1
Methylene Chloride	ND		1.0		ug/L			03/22/13 16:53	1
m-Xylene & p-Xylene	ND		2.0		ug/L			03/22/13 16:53	1
Naphthalene	ND		5.0		ug/L			03/22/13 16:53	1
n-Butylbenzene	ND		1.0		ug/L			03/22/13 16:53	1
N-Propylbenzene	ND		1.0		ug/L			03/22/13 16:53	1
o-Xylene	ND		1.0		ug/L			03/22/13 16:53	1
sec-Butylbenzene	ND		1.0		ug/L			03/22/13 16:53	1
Styrene	ND		1.0		ug/L			03/22/13 16:53	1
Tert-amyl methyl ether	ND		5.0		ug/L			03/22/13 16:53	1
Tert-butyl ethyl ether	ND		5.0		ug/L			03/22/13 16:53	1
tert-Butylbenzene	ND		1.0		ug/L			03/22/13 16:53	1
Tetrachloroethene	ND		1.0		ug/L			03/22/13 16:53	1
Tetrahydrofuran	ND		10		ug/L			03/22/13 16:53	1
Toluene	ND		1.0		ug/L			03/22/13 16:53	1
trans-1,2-Dichloroethene	ND		1.0		ug/L			03/22/13 16:53	1
trans-1,3-Dichloropropene	ND		0.40		ug/L			03/22/13 16:53	1
Trichloroethene	**2.3**		1.0		ug/L			03/22/13 16:53	1
Trichlorofluoromethane	ND		1.0		ug/L			03/22/13 16:53	1
Vinyl chloride	ND		0.50		ug/L			03/22/13 16:53	1
Dibromomethane	ND		1.0		ug/L			03/22/13 16:53	1

Surrogate	*%Recovery*	*Qualifier*	*Limits*	*Prepared*	*Analyzed*	*Dil Fac*
Toluene-d8 (Surr)	*95*		*70 - 130*		*03/22/13 16:53*	*1*
1,2-Dichloroethane-d4 (Surr)	*92*		*70 - 130*		*03/22/13 16:53*	*1*
4-Bromofluorobenzene (Surr)	*99*		*70 - 130*		*03/22/13 16:53*	*1*

Client Sample ID: MW1009-20130321-01

Lab Sample ID: 480-34808-2

Date Collected: 03/21/13 10:25

Matrix: Water

Date Received: 03/22/13 12:30

Method: 8260C - Volatile Organic Compounds (GC/MS)

Analyte	Result	Qualifier	RL	MDL	Unit	D	Prepared	Analyzed	Dil Fac
1,1,1,2-Tetrachloroethane	ND		1.0		ug/L			03/22/13 17:16	1
1,1,1-Trichloroethane	ND		1.0		ug/L			03/22/13 17:16	1
1,1,2,2-Tetrachloroethane	ND		0.50		ug/L			03/22/13 17:16	1
1,1,2-Trichloroethane	ND		1.0		ug/L			03/22/13 17:16	1
1,1-Dichloroethane	ND		1.0		ug/L			03/22/13 17:16	1
1,1-Dichloroethene	ND		1.0		ug/L			03/22/13 17:16	1
1,1-Dichloropropene	ND		1.0		ug/L			03/22/13 17:16	1
1,2,3-Trichlorobenzene	ND		1.0		ug/L			03/22/13 17:16	1
1,2,3-Trichloropropane	ND		1.0		ug/L			03/22/13 17:16	1
1,2,4-Trichlorobenzene	ND		1.0		ug/L			03/22/13 17:16	1
1,2,4-Trimethylbenzene	ND		1.0		ug/L			03/22/13 17:16	1
1,2-Dibromo-3-Chloropropane	ND		5.0		ug/L			03/22/13 17:16	1
1,2-Dichlorobenzene	**2.0**		1.0		ug/L			03/22/13 17:16	1
1,2-Dichloroethane	ND		1.0		ug/L			03/22/13 17:16	1
1,2-Dichloropropane	ND		1.0		ug/L			03/22/13 17:16	1
1,3,5-Trimethylbenzene	ND		1.0		ug/L			03/22/13 17:16	1

Client: ERM-Northeast
Project/Site: IDS Wayland

TestAmerica Job ID: 480-34808-1

Client Sample ID: MW1009-20130321-01
Date Collected: 03/21/13 10:25
Date Received: 03/22/13 12:30

Lab Sample ID: 480-34808-2
Matrix: Water

Method: 8260C - Volatile Organic Compounds (GC/MS) (Continued)

Analyte	Result	Qualifier	RL	MDL	Unit	D	Prepared	Analyzed	Dil Fac
1,3-Dichlorobenzene	ND		1.0		ug/L			03/22/13 17:16	1
1,3-Dichloropropane	ND		1.0		ug/L			03/22/13 17:16	1
1,4-Dichlorobenzene	**1.0**		1.0		ug/L			03/22/13 17:16	1
1,4-Dioxane	ND		50		ug/L			03/22/13 17:16	1
2,2-Dichloropropane	ND		1.0		ug/L			03/22/13 17:16	1
2-Butanone (MEK)	ND	*	10		ug/L			03/22/13 17:16	1
2-Chlorotoluene	ND		1.0		ug/L			03/22/13 17:16	1
2-Hexanone	ND		10		ug/L			03/22/13 17:16	1
4-Chlorotoluene	ND		1.0		ug/L			03/22/13 17:16	1
4-Isopropyltoluene	ND		1.0		ug/L			03/22/13 17:16	1
4-Methyl-2-pentanone (MIBK)	ND		10		ug/L			03/22/13 17:16	1
Acetone	ND		50		ug/L			03/22/13 17:16	1
Benzene	**1.5**		1.0		ug/L			03/22/13 17:16	1
Bromobenzene	ND		1.0		ug/L			03/22/13 17:16	1
Bromoform	ND		1.0		ug/L			03/22/13 17:16	1
Bromomethane	ND		2.0		ug/L			03/22/13 17:16	1
Carbon disulfide	ND		10		ug/L			03/22/13 17:16	1
Carbon tetrachloride	ND		1.0		ug/L			03/22/13 17:16	1
Chlorobenzene	ND		1.0		ug/L			03/22/13 17:16	1
Chlorobromomethane	ND		1.0		ug/L			03/22/13 17:16	1
Chlorodibromomethane	ND		0.50		ug/L			03/22/13 17:16	1
Chloroethane	ND		2.0		ug/L			03/22/13 17:16	1
Chloroform	ND		1.0		ug/L			03/22/13 17:16	1
Chloromethane	ND		2.0		ug/L			03/22/13 17:16	1
cis-1,2-Dichloroethene	**2.2**		1.0		ug/L			03/22/13 17:16	1
cis-1,3-Dichloropropene	ND		0.40		ug/L			03/22/13 17:16	1
Dichlorobromomethane	ND		0.50		ug/L			03/22/13 17:16	1
Dichlorodifluoromethane	ND		1.0		ug/L			03/22/13 17:16	1
Ethyl ether	ND		1.0		ug/L			03/22/13 17:16	1
Ethylbenzene	ND		1.0		ug/L			03/22/13 17:16	1
Ethylene Dibromide	ND		1.0		ug/L			03/22/13 17:16	1
Hexachlorobutadiene	ND		0.40		ug/L			03/22/13 17:16	1
Isopropyl ether	ND		10		ug/L			03/22/13 17:16	1
Isopropylbenzene	ND		1.0		ug/L			03/22/13 17:16	1
Methyl tert-butyl ether	ND		1.0		ug/L			03/22/13 17:16	1
Methylene Chloride	ND		1.0		ug/L			03/22/13 17:16	1
m-Xylene & p-Xylene	ND		2.0		ug/L			03/22/13 17:16	1
Naphthalene	ND		5.0		ug/L			03/22/13 17:16	1
n-Butylbenzene	ND		1.0		ug/L			03/22/13 17:16	1
N-Propylbenzene	ND		1.0		ug/L			03/22/13 17:16	1
o-Xylene	ND		1.0		ug/L			03/22/13 17:16	1
sec-Butylbenzene	ND		1.0		ug/L			03/22/13 17:16	1
Styrene	ND		1.0		ug/L			03/22/13 17:16	1
Tert-amyl methyl ether	ND		5.0		ug/L			03/22/13 17:16	1
Tert-butyl ethyl ether	ND		5.0		ug/L			03/22/13 17:16	1
tert-Butylbenzene	ND		1.0		ug/L			03/22/13 17:16	1
Tetrachloroethene	ND		1.0		ug/L			03/22/13 17:16	1
Tetrahydrofuran	ND		10		ug/L			03/22/13 17:16	1
Toluene	ND		1.0		ug/L			03/22/13 17:16	1

Client Sample ID: MW1009-20130321-01

Lab Sample ID: 480-34808-2

Date Collected: 03/21/13 10:25

Matrix: Water

Date Received: 03/22/13 12:30

Method: 8260C - Volatile Organic Compounds (GC/MS) (Continued)

Analyte	Result	Qualifier	RL	MDL	Unit	D	Prepared	Analyzed	Dil Fac
trans-1,2-Dichloroethene	ND		1.0		ug/L			03/22/13 17:16	1
trans-1,3-Dichloropropene	ND		0.40		ug/L			03/22/13 17:16	1
Trichloroethene	**1.9**		1.0		ug/L			03/22/13 17:16	1
Trichlorofluoromethane	ND		1.0		ug/L			03/22/13 17:16	1
Vinyl chloride	ND		0.50		ug/L			03/22/13 17:16	1
Dibromomethane	ND		1.0		ug/L			03/22/13 17:16	1

Surrogate	*%Recovery*	*Qualifier*	*Limits*	*Prepared*	*Analyzed*	*Dil Fac*
Toluene-d8 (Surr)	*96*		*70 - 130*		*03/22/13 17:16*	*1*
1,2-Dichloroethane-d4 (Surr)	*95*		*70 - 130*		*03/22/13 17:16*	*1*
4-Bromofluorobenzene (Surr)	*100*		*70 - 130*		*03/22/13 17:16*	*1*

Client Sample ID: MW1001M-20130321-01

Lab Sample ID: 480-34808-3

Date Collected: 03/21/13 11:30

Matrix: Water

Date Received: 03/22/13 12:30

Method: 8260C - Volatile Organic Compounds (GC/MS)

Analyte	Result	Qualifier	RL	MDL	Unit	D	Prepared	Analyzed	Dil Fac
1,1,1,2-Tetrachloroethane	ND		1.0		ug/L			03/22/13 17:40	1
1,1,1-Trichloroethane	ND		1.0		ug/L			03/22/13 17:40	1
1,1,2,2-Tetrachloroethane	ND		0.50		ug/L			03/22/13 17:40	1
1,1,2-Trichloroethane	ND		1.0		ug/L			03/22/13 17:40	1
1,1-Dichloroethane	ND		1.0		ug/L			03/22/13 17:40	1
1,1-Dichloroethene	ND		1.0		ug/L			03/22/13 17:40	1
1,1-Dichloropropene	ND		1.0		ug/L			03/22/13 17:40	1
1,2,3-Trichlorobenzene	ND		1.0		ug/L			03/22/13 17:40	1
1,2,3-Trichloropropane	ND		1.0		ug/L			03/22/13 17:40	1
1,2,4-Trichlorobenzene	ND		1.0		ug/L			03/22/13 17:40	1
1,2,4-Trimethylbenzene	ND		1.0		ug/L			03/22/13 17:40	1
1,2-Dibromo-3-Chloropropane	ND		5.0		ug/L			03/22/13 17:40	1
1,2-Dichlorobenzene	ND		1.0		ug/L			03/22/13 17:40	1
1,2-Dichloroethane	ND		1.0		ug/L			03/22/13 17:40	1
1,2-Dichloropropane	ND		1.0		ug/L			03/22/13 17:40	1
1,3,5-Trimethylbenzene	ND		1.0		ug/L			03/22/13 17:40	1
1,3-Dichlorobenzene	ND		1.0		ug/L			03/22/13 17:40	1
1,3-Dichloropropane	ND		1.0		ug/L			03/22/13 17:40	1
1,4-Dichlorobenzene	ND		1.0		ug/L			03/22/13 17:40	1
1,4-Dioxane	ND		50		ug/L			03/22/13 17:40	1
2,2-Dichloropropane	ND		1.0		ug/L			03/22/13 17:40	1
2-Butanone (MEK)	ND	*	10		ug/L			03/22/13 17:40	1
2-Chlorotoluene	ND		1.0		ug/L			03/22/13 17:40	1
2-Hexanone	ND		10		ug/L			03/22/13 17:40	1
4-Chlorotoluene	ND		1.0		ug/L			03/22/13 17:40	1
4-Isopropyltoluene	ND		1.0		ug/L			03/22/13 17:40	1
4-Methyl-2-pentanone (MIBK)	ND		10		ug/L			03/22/13 17:40	1
Acetone	ND		50		ug/L			03/22/13 17:40	1
Benzene	ND		1.0		ug/L			03/22/13 17:40	1
Bromobenzene	ND		1.0		ug/L			03/22/13 17:40	1
Bromoform	ND		1.0		ug/L			03/22/13 17:40	1
Bromomethane	ND		2.0		ug/L			03/22/13 17:40	1

Client Sample ID: MW1001M-20130321-01

Lab Sample ID: 480-34808-3

Date Collected: 03/21/13 11:30

Matrix: Water

Date Received: 03/22/13 12:30

Method: 8260C - Volatile Organic Compounds (GC/MS) (Continued)

Analyte	Result	Qualifier	RL	MDL	Unit	D	Prepared	Analyzed	Dil Fac
Carbon disulfide	ND		10		ug/L			03/22/13 17:40	1
Carbon tetrachloride	ND		1.0		ug/L			03/22/13 17:40	1
Chlorobenzene	ND		1.0		ug/L			03/22/13 17:40	1
Chlorobromomethane	ND		1.0		ug/L			03/22/13 17:40	1
Chlorodibromomethane	ND		0.50		ug/L			03/22/13 17:40	1
Chloroethane	ND		2.0		ug/L			03/22/13 17:40	1
Chloroform	ND		1.0		ug/L			03/22/13 17:40	1
Chloromethane	ND		2.0		ug/L			03/22/13 17:40	1
cis-1,2-Dichloroethene	**11**		1.0		ug/L			03/22/13 17:40	1
cis-1,3-Dichloropropene	ND		0.40		ug/L			03/22/13 17:40	1
Dichlorobromomethane	ND		0.50		ug/L			03/22/13 17:40	1
Dichlorodifluoromethane	ND		1.0		ug/L			03/22/13 17:40	1
Ethyl ether	ND		1.0		ug/L			03/22/13 17:40	1
Ethylbenzene	ND		1.0		ug/L			03/22/13 17:40	1
Ethylene Dibromide	ND		1.0		ug/L			03/22/13 17:40	1
Hexachlorobutadiene	ND		0.40		ug/L			03/22/13 17:40	1
Isopropyl ether	ND		10		ug/L			03/22/13 17:40	1
Isopropylbenzene	ND		1.0		ug/L			03/22/13 17:40	1
Methyl tert-butyl ether	ND		1.0		ug/L			03/22/13 17:40	1
Methylene Chloride	ND		1.0		ug/L			03/22/13 17:40	1
m-Xylene & p-Xylene	ND		2.0		ug/L			03/22/13 17:40	1
Naphthalene	ND		5.0		ug/L			03/22/13 17:40	1
n-Butylbenzene	ND		1.0		ug/L			03/22/13 17:40	1
N-Propylbenzene	ND		1.0		ug/L			03/22/13 17:40	1
o-Xylene	ND		1.0		ug/L			03/22/13 17:40	1
sec-Butylbenzene	ND		1.0		ug/L			03/22/13 17:40	1
Styrene	ND		1.0		ug/L			03/22/13 17:40	1
Tert-amyl methyl ether	ND		5.0		ug/L			03/22/13 17:40	1
Tert-butyl ethyl ether	ND		5.0		ug/L			03/22/13 17:40	1
tert-Butylbenzene	ND		1.0		ug/L			03/22/13 17:40	1
Tetrachloroethene	ND		1.0		ug/L			03/22/13 17:40	1
Tetrahydrofuran	ND		10		ug/L			03/22/13 17:40	1
Toluene	ND		1.0		ug/L			03/22/13 17:40	1
trans-1,2-Dichloroethene	ND		1.0		ug/L			03/22/13 17:40	1
trans-1,3-Dichloropropene	ND		0.40		ug/L			03/22/13 17:40	1
Trichloroethene	**8.2**		1.0		ug/L			03/22/13 17:40	1
Trichlorofluoromethane	ND		1.0		ug/L			03/22/13 17:40	1
Vinyl chloride	ND		0.50		ug/L			03/22/13 17:40	1
Dibromomethane	ND		1.0		ug/L			03/22/13 17:40	1

Surrogate	*%Recovery*	*Qualifier*	*Limits*	*Prepared*	*Analyzed*	*Dil Fac*
Toluene-d8 (Surr)	*97*		*70 - 130*		*03/22/13 17:40*	*1*
1,2-Dichloroethane-d4 (Surr)	*95*		*70 - 130*		*03/22/13 17:40*	*1*
4-Bromofluorobenzene (Surr)	*100*		*70 - 130*		*03/22/13 17:40*	*1*

Client: ERM-Northeast
Project/Site: IDS Wayland

TestAmerica Job ID: 480-34808-1

Client Sample ID: MW1001B-20130321-01
Date Collected: 03/21/13 13:10
Date Received: 03/22/13 12:30

Lab Sample ID: 480-34808-4
Matrix: Water

Method: 8260C - Volatile Organic Compounds (GC/MS)

Analyte	Result	Qualifier	RL	MDL	Unit	D	Prepared	Analyzed	Dil Fac
1,1,1,2-Tetrachloroethane	ND		1.0		ug/L			03/22/13 18:04	1
1,1,1-Trichloroethane	ND		1.0		ug/L			03/22/13 18:04	1
1,1,2,2-Tetrachloroethane	ND		0.50		ug/L			03/22/13 18:04	1
1,1,2-Trichloroethane	ND		1.0		ug/L			03/22/13 18:04	1
1,1-Dichloroethane	ND		1.0		ug/L			03/22/13 18:04	1
1,1-Dichloroethene	ND		1.0		ug/L			03/22/13 18:04	1
1,1-Dichloropropene	ND		1.0		ug/L			03/22/13 18:04	1
1,2,3-Trichlorobenzene	ND		1.0		ug/L			03/22/13 18:04	1
1,2,3-Trichloropropane	ND		1.0		ug/L			03/22/13 18:04	1
1,2,4-Trichlorobenzene	ND		1.0		ug/L			03/22/13 18:04	1
1,2,4-Trimethylbenzene	ND		1.0		ug/L			03/22/13 18:04	1
1,2-Dibromo-3-Chloropropane	ND		5.0		ug/L			03/22/13 18:04	1
1,2-Dichlorobenzene	ND		1.0		ug/L			03/22/13 18:04	1
1,2-Dichloroethane	ND		1.0		ug/L			03/22/13 18:04	1
1,2-Dichloropropane	ND		1.0		ug/L			03/22/13 18:04	1
1,3,5-Trimethylbenzene	ND		1.0		ug/L			03/22/13 18:04	1
1,3-Dichlorobenzene	ND		1.0		ug/L			03/22/13 18:04	1
1,3-Dichloropropane	ND		1.0		ug/L			03/22/13 18:04	1
1,4-Dichlorobenzene	ND		1.0		ug/L			03/22/13 18:04	1
1,4-Dioxane	ND		50		ug/L			03/22/13 18:04	1
2,2-Dichloropropane	ND		1.0		ug/L			03/22/13 18:04	1
2-Butanone (MEK)	ND	*	10		ug/L			03/22/13 18:04	1
2-Chlorotoluene	ND		1.0		ug/L			03/22/13 18:04	1
2-Hexanone	ND		10		ug/L			03/22/13 18:04	1
4-Chlorotoluene	ND		1.0		ug/L			03/22/13 18:04	1
4-Isopropyltoluene	ND		1.0		ug/L			03/22/13 18:04	1
4-Methyl-2-pentanone (MIBK)	ND		10		ug/L			03/22/13 18:04	1
Acetone	ND		50		ug/L			03/22/13 18:04	1
Benzene	ND		1.0		ug/L			03/22/13 18:04	1
Bromobenzene	ND		1.0		ug/L			03/22/13 18:04	1
Bromoform	ND		1.0		ug/L			03/22/13 18:04	1
Bromomethane	ND		2.0		ug/L			03/22/13 18:04	1
Carbon disulfide	ND		10		ug/L			03/22/13 18:04	1
Carbon tetrachloride	ND		1.0		ug/L			03/22/13 18:04	1
Chlorobenzene	ND		1.0		ug/L			03/22/13 18:04	1
Chlorobromomethane	ND		1.0		ug/L			03/22/13 18:04	1
Chlorodibromomethane	ND		0.50		ug/L			03/22/13 18:04	1
Chloroethane	ND		2.0		ug/L			03/22/13 18:04	1
Chloroform	ND		1.0		ug/L			03/22/13 18:04	1
Chloromethane	ND		2.0		ug/L			03/22/13 18:04	1
cis-1,2-Dichloroethene	ND		1.0		ug/L			03/22/13 18:04	1
cis-1,3-Dichloropropene	ND		0.40		ug/L			03/22/13 18:04	1
Dichlorobromomethane	ND		0.50		ug/L			03/22/13 18:04	1
Dichlorodifluoromethane	ND		1.0		ug/L			03/22/13 18:04	1
Ethyl ether	ND		1.0		ug/L			03/22/13 18:04	1
Ethylbenzene	ND		1.0		ug/L			03/22/13 18:04	1
Ethylene Dibromide	ND		1.0		ug/L			03/22/13 18:04	1
Hexachlorobutadiene	ND		0.40		ug/L			03/22/13 18:04	1
Isopropyl ether	ND		10		ug/L			03/22/13 18:04	1

Client Sample ID: MW1001B-20130321-01

Lab Sample ID: 480-34808-4

Date Collected: 03/21/13 13:10

Matrix: Water

Date Received: 03/22/13 12:30

Method: 8260C - Volatile Organic Compounds (GC/MS) (Continued)

Analyte	Result	Qualifier	RL	MDL	Unit	D	Prepared	Analyzed	Dil Fac
Isopropylbenzene	ND		1.0		ug/L			03/22/13 18:04	1
Methyl tert-butyl ether	ND		1.0		ug/L			03/22/13 18:04	1
Methylene Chloride	ND		1.0		ug/L			03/22/13 18:04	1
m-Xylene & p-Xylene	ND		2.0		ug/L			03/22/13 18:04	1
Naphthalene	ND		5.0		ug/L			03/22/13 18:04	1
n-Butylbenzene	ND		1.0		ug/L			03/22/13 18:04	1
N-Propylbenzene	ND		1.0		ug/L			03/22/13 18:04	1
o-Xylene	ND		1.0		ug/L			03/22/13 18:04	1
sec-Butylbenzene	ND		1.0		ug/L			03/22/13 18:04	1
Styrene	ND		1.0		ug/L			03/22/13 18:04	1
Tert-amyl methyl ether	ND		5.0		ug/L			03/22/13 18:04	1
Tert-butyl ethyl ether	ND		5.0		ug/L			03/22/13 18:04	1
tert-Butylbenzene	ND		1.0		ug/L			03/22/13 18:04	1
Tetrachloroethene	ND		1.0		ug/L			03/22/13 18:04	1
Tetrahydrofuran	ND		10		ug/L			03/22/13 18:04	1
Toluene	ND		1.0		ug/L			03/22/13 18:04	1
trans-1,2-Dichloroethene	ND		1.0		ug/L			03/22/13 18:04	1
trans-1,3-Dichloropropene	ND		0.40		ug/L			03/22/13 18:04	1
Trichloroethene	ND		1.0		ug/L			03/22/13 18:04	1
Trichlorofluoromethane	ND		1.0		ug/L			03/22/13 18:04	1
Vinyl chloride	ND		0.50		ug/L			03/22/13 18:04	1
Dibromomethane	ND		1.0		ug/L			03/22/13 18:04	1

Surrogate	*%Recovery*	*Qualifier*	*Limits*	*Prepared*	*Analyzed*	*Dil Fac*
Toluene-d8 (Surr)	*94*		*70 - 130*		*03/22/13 18:04*	*1*
1,2-Dichloroethane-d4 (Surr)	*94*		*70 - 130*		*03/22/13 18:04*	*1*
4-Bromofluorobenzene (Surr)	*100*		*70 - 130*		*03/22/13 18:04*	*1*

Client Sample ID: MW1004-20130321-01

Lab Sample ID: 480-34808-5

Date Collected: 03/21/13 13:20

Matrix: Water

Date Received: 03/22/13 12:30

Method: 8260C - Volatile Organic Compounds (GC/MS)

Analyte	Result	Qualifier	RL	MDL	Unit	D	Prepared	Analyzed	Dil Fac
1,1,1,2-Tetrachloroethane	ND		1.0		ug/L			03/22/13 18:28	1
1,1,1-Trichloroethane	ND		1.0		ug/L			03/22/13 18:28	1
1,1,2,2-Tetrachloroethane	ND		0.50		ug/L			03/22/13 18:28	1
1,1,2-Trichloroethane	ND		1.0		ug/L			03/22/13 18:28	1
1,1-Dichloroethane	ND		1.0		ug/L			03/22/13 18:28	1
1,1-Dichloroethene	ND		1.0		ug/L			03/22/13 18:28	1
1,1-Dichloropropene	ND		1.0		ug/L			03/22/13 18:28	1
1,2,3-Trichlorobenzene	ND		1.0		ug/L			03/22/13 18:28	1
1,2,3-Trichloropropane	ND		1.0		ug/L			03/22/13 18:28	1
1,2,4-Trichlorobenzene	ND		1.0		ug/L			03/22/13 18:28	1
1,2,4-Trimethylbenzene	ND		1.0		ug/L			03/22/13 18:28	1
1,2-Dibromo-3-Chloropropane	ND		5.0		ug/L			03/22/13 18:28	1
1,2-Dichlorobenzene	ND		1.0		ug/L			03/22/13 18:28	1
1,2-Dichloroethane	ND		1.0		ug/L			03/22/13 18:28	1
1,2-Dichloropropane	ND		1.0		ug/L			03/22/13 18:28	1
1,3,5-Trimethylbenzene	ND		1.0		ug/L			03/22/13 18:28	1

Client: ERM-Northeast
Project/Site: IDS Wayland

TestAmerica Job ID: 480-34808-1

Client Sample ID: MW1004-20130321-01
Date Collected: 03/21/13 13:20
Date Received: 03/22/13 12:30

Lab Sample ID: 480-34808-5
Matrix: Water

Method: 8260C - Volatile Organic Compounds (GC/MS) (Continued)

Analyte	Result	Qualifier	RL	MDL	Unit	D	Prepared	Analyzed	Dil Fac
1,3-Dichlorobenzene	ND		1.0		ug/L			03/22/13 18:28	1
1,3-Dichloropropane	ND		1.0		ug/L			03/22/13 18:28	1
1,4-Dichlorobenzene	ND		1.0		ug/L			03/22/13 18:28	1
1,4-Dioxane	ND		50		ug/L			03/22/13 18:28	1
2,2-Dichloropropane	ND		1.0		ug/L			03/22/13 18:28	1
2-Butanone (MEK)	ND	*	10		ug/L			03/22/13 18:28	1
2-Chlorotoluene	ND		1.0		ug/L			03/22/13 18:28	1
2-Hexanone	ND		10		ug/L			03/22/13 18:28	1
4-Chlorotoluene	ND		1.0		ug/L			03/22/13 18:28	1
4-Isopropyltoluene	ND		1.0		ug/L			03/22/13 18:28	1
4-Methyl-2-pentanone (MIBK)	ND		10		ug/L			03/22/13 18:28	1
Acetone	ND		50		ug/L			03/22/13 18:28	1
Benzene	ND		1.0		ug/L			03/22/13 18:28	1
Bromobenzene	ND		1.0		ug/L			03/22/13 18:28	1
Bromoform	ND		1.0		ug/L			03/22/13 18:28	1
Bromomethane	ND		2.0		ug/L			03/22/13 18:28	1
Carbon disulfide	ND		10		ug/L			03/22/13 18:28	1
Carbon tetrachloride	ND		1.0		ug/L			03/22/13 18:28	1
Chlorobenzene	ND		1.0		ug/L			03/22/13 18:28	1
Chlorobromomethane	ND		1.0		ug/L			03/22/13 18:28	1
Chlorodibromomethane	ND		0.50		ug/L			03/22/13 18:28	1
Chloroethane	ND		2.0		ug/L			03/22/13 18:28	1
Chloroform	ND		1.0		ug/L			03/22/13 18:28	1
Chloromethane	ND		2.0		ug/L			03/22/13 18:28	1
cis-1,2-Dichloroethene	ND		1.0		ug/L			03/22/13 18:28	1
cis-1,3-Dichloropropene	ND		0.40		ug/L			03/22/13 18:28	1
Dichlorobromomethane	ND		0.50		ug/L			03/22/13 18:28	1
Dichlorodifluoromethane	ND		1.0		ug/L			03/22/13 18:28	1
Ethyl ether	ND		1.0		ug/L			03/22/13 18:28	1
Ethylbenzene	ND		1.0		ug/L			03/22/13 18:28	1
Ethylene Dibromide	ND		1.0		ug/L			03/22/13 18:28	1
Hexachlorobutadiene	ND		0.40		ug/L			03/22/13 18:28	1
Isopropyl ether	ND		10		ug/L			03/22/13 18:28	1
Isopropylbenzene	ND		1.0		ug/L			03/22/13 18:28	1
Methyl tert-butyl ether	ND		1.0		ug/L			03/22/13 18:28	1
Methylene Chloride	ND		1.0		ug/L			03/22/13 18:28	1
m-Xylene & p-Xylene	ND		2.0		ug/L			03/22/13 18:28	1
Naphthalene	ND		5.0		ug/L			03/22/13 18:28	1
n-Butylbenzene	ND		1.0		ug/L			03/22/13 18:28	1
N-Propylbenzene	ND		1.0		ug/L			03/22/13 18:28	1
o-Xylene	ND		1.0		ug/L			03/22/13 18:28	1
sec-Butylbenzene	ND		1.0		ug/L			03/22/13 18:28	1
Styrene	ND		1.0		ug/L			03/22/13 18:28	1
Tert-amyl methyl ether	ND		5.0		ug/L			03/22/13 18:28	1
Tert-butyl ethyl ether	ND		5.0		ug/L			03/22/13 18:28	1
tert-Butylbenzene	ND		1.0		ug/L			03/22/13 18:28	1
Tetrachloroethene	ND		1.0		ug/L			03/22/13 18:28	1
Tetrahydrofuran	ND		10		ug/L			03/22/13 18:28	1
Toluene	ND		1.0		ug/L			03/22/13 18:28	1

Client Sample ID: MW1004-20130321-01

Lab Sample ID: 480-34808-5

Date Collected: 03/21/13 13:20

Matrix: Water

Date Received: 03/22/13 12:30

Method: 8260C - Volatile Organic Compounds (GC/MS) (Continued)

Analyte	Result	Qualifier	RL	MDL	Unit	D	Prepared	Analyzed	Dil Fac
trans-1,2-Dichloroethene	ND		1.0		ug/L			03/22/13 18:28	1
trans-1,3-Dichloropropene	ND		0.40		ug/L			03/22/13 18:28	1
Trichloroethene	ND		1.0		ug/L			03/22/13 18:28	1
Trichlorofluoromethane	ND		1.0		ug/L			03/22/13 18:28	1
Vinyl chloride	ND		0.50		ug/L			03/22/13 18:28	1
Dibromomethane	ND		1.0		ug/L			03/22/13 18:28	1

Surrogate	*%Recovery*	*Qualifier*	*Limits*	*Prepared*	*Analyzed*	*Dil Fac*
Toluene-d8 (Surr)	*98*		*70 - 130*		*03/22/13 18:28*	*1*
1,2-Dichloroethane-d4 (Surr)	*94*		*70 - 130*		*03/22/13 18:28*	*1*
4-Bromofluorobenzene (Surr)	*101*		*70 - 130*		*03/22/13 18:28*	*1*

Client Sample ID: DUP004-20130321-01

Lab Sample ID: 480-34808-6

Date Collected: 03/21/13 11:11

Matrix: Water

Date Received: 03/22/13 12:30

Method: 8260C - Volatile Organic Compounds (GC/MS)

Analyte	Result	Qualifier	RL	MDL	Unit	D	Prepared	Analyzed	Dil Fac
1,1,1,2-Tetrachloroethane	ND		1.0		ug/L			03/22/13 18:52	1
1,1,1-Trichloroethane	ND		1.0		ug/L			03/22/13 18:52	1
1,1,2,2-Tetrachloroethane	ND		0.50		ug/L			03/22/13 18:52	1
1,1,2-Trichloroethane	ND		1.0		ug/L			03/22/13 18:52	1
1,1-Dichloroethane	ND		1.0		ug/L			03/22/13 18:52	1
1,1-Dichloroethene	ND		1.0		ug/L			03/22/13 18:52	1
1,1-Dichloropropene	ND		1.0		ug/L			03/22/13 18:52	1
1,2,3-Trichlorobenzene	ND		1.0		ug/L			03/22/13 18:52	1
1,2,3-Trichloropropane	ND		1.0		ug/L			03/22/13 18:52	1
1,2,4-Trichlorobenzene	ND		1.0		ug/L			03/22/13 18:52	1
1,2,4-Trimethylbenzene	ND		1.0		ug/L			03/22/13 18:52	1
1,2-Dibromo-3-Chloropropane	ND		5.0		ug/L			03/22/13 18:52	1
1,2-Dichlorobenzene	ND		1.0		ug/L			03/22/13 18:52	1
1,2-Dichloroethane	ND		1.0		ug/L			03/22/13 18:52	1
1,2-Dichloropropane	ND		1.0		ug/L			03/22/13 18:52	1
1,3,5-Trimethylbenzene	ND		1.0		ug/L			03/22/13 18:52	1
1,3-Dichlorobenzene	ND		1.0		ug/L			03/22/13 18:52	1
1,3-Dichloropropane	ND		1.0		ug/L			03/22/13 18:52	1
1,4-Dichlorobenzene	ND		1.0		ug/L			03/22/13 18:52	1
1,4-Dioxane	ND		50		ug/L			03/22/13 18:52	1
2,2-Dichloropropane	ND		1.0		ug/L			03/22/13 18:52	1
2-Butanone (MEK)	ND	*	10		ug/L			03/22/13 18:52	1
2-Chlorotoluene	ND		1.0		ug/L			03/22/13 18:52	1
2-Hexanone	ND		10		ug/L			03/22/13 18:52	1
4-Chlorotoluene	ND		1.0		ug/L			03/22/13 18:52	1
4-Isopropyltoluene	ND		1.0		ug/L			03/22/13 18:52	1
4-Methyl-2-pentanone (MIBK)	ND		10		ug/L			03/22/13 18:52	1
Acetone	ND		50		ug/L			03/22/13 18:52	1
Benzene	ND		1.0		ug/L			03/22/13 18:52	1
Bromobenzene	ND		1.0		ug/L			03/22/13 18:52	1
Bromoform	ND		1.0		ug/L			03/22/13 18:52	1
Bromomethane	ND		2.0		ug/L			03/22/13 18:52	1

Client Sample ID: DUP004-20130321-01

Lab Sample ID: 480-34808-6

Date Collected: 03/21/13 11:11

Matrix: Water

Date Received: 03/22/13 12:30

Method: 8260C - Volatile Organic Compounds (GC/MS) (Continued)

Analyte	Result	Qualifier	RL	MDL	Unit	D	Prepared	Analyzed	Dil Fac
Carbon disulfide	ND		10		ug/L			03/22/13 18:52	1
Carbon tetrachloride	ND		1.0		ug/L			03/22/13 18:52	1
Chlorobenzene	ND		1.0		ug/L			03/22/13 18:52	1
Chlorobromomethane	ND		1.0		ug/L			03/22/13 18:52	1
Chlorodibromomethane	ND		0.50		ug/L			03/22/13 18:52	1
Chloroethane	ND		2.0		ug/L			03/22/13 18:52	1
Chloroform	ND		1.0		ug/L			03/22/13 18:52	1
Chloromethane	ND		2.0		ug/L			03/22/13 18:52	1
cis-1,2-Dichloroethene	ND		1.0		ug/L			03/22/13 18:52	1
cis-1,3-Dichloropropene	ND		0.40		ug/L			03/22/13 18:52	1
Dichlorobromomethane	ND		0.50		ug/L			03/22/13 18:52	1
Dichlorodifluoromethane	ND		1.0		ug/L			03/22/13 18:52	1
Ethyl ether	ND		1.0		ug/L			03/22/13 18:52	1
Ethylbenzene	ND		1.0		ug/L			03/22/13 18:52	1
Ethylene Dibromide	ND		1.0		ug/L			03/22/13 18:52	1
Hexachlorobutadiene	ND		0.40		ug/L			03/22/13 18:52	1
Isopropyl ether	ND		10		ug/L			03/22/13 18:52	1
Isopropylbenzene	ND		1.0		ug/L			03/22/13 18:52	1
Methyl tert-butyl ether	ND		1.0		ug/L			03/22/13 18:52	1
Methylene Chloride	ND		1.0		ug/L			03/22/13 18:52	1
m-Xylene & p-Xylene	ND		2.0		ug/L			03/22/13 18:52	1
Naphthalene	ND		5.0		ug/L			03/22/13 18:52	1
n-Butylbenzene	ND		1.0		ug/L			03/22/13 18:52	1
N-Propylbenzene	ND		1.0		ug/L			03/22/13 18:52	1
o-Xylene	ND		1.0		ug/L			03/22/13 18:52	1
sec-Butylbenzene	ND		1.0		ug/L			03/22/13 18:52	1
Styrene	ND		1.0		ug/L			03/22/13 18:52	1
Tert-amyl methyl ether	ND		5.0		ug/L			03/22/13 18:52	1
Tert-butyl ethyl ether	ND		5.0		ug/L			03/22/13 18:52	1
tert-Butylbenzene	ND		1.0		ug/L			03/22/13 18:52	1
Tetrachloroethene	ND		1.0		ug/L			03/22/13 18:52	1
Tetrahydrofuran	ND		10		ug/L			03/22/13 18:52	1
Toluene	ND		1.0		ug/L			03/22/13 18:52	1
trans-1,2-Dichloroethene	ND		1.0		ug/L			03/22/13 18:52	1
trans-1,3-Dichloropropene	ND		0.40		ug/L			03/22/13 18:52	1
Trichloroethene	**1.9**		1.0		ug/L			03/22/13 18:52	1
Trichlorofluoromethane	ND		1.0		ug/L			03/22/13 18:52	1
Vinyl chloride	ND		0.50		ug/L			03/22/13 18:52	1
Dibromomethane	ND		1.0		ug/L			03/22/13 18:52	1

Surrogate	*%Recovery*	*Qualifier*	*Limits*	*Prepared*	*Analyzed*	*Dil Fac*
Toluene-d8 (Surr)	*96*		*70 - 130*		*03/22/13 18:52*	*1*
1,2-Dichloroethane-d4 (Surr)	*95*		*70 - 130*		*03/22/13 18:52*	*1*
4-Bromofluorobenzene (Surr)	*100*		*70 - 130*		*03/22/13 18:52*	*1*

Client Sample Results

Client: ERM-Northeast
Project/Site: IDS Wayland

TestAmerica Job ID: 480-34808-1

Client Sample ID: MW1025D-20130321-01

Lab Sample ID: 480-34808-7

Date Collected: 03/21/13 11:35
Matrix: Water
Date Received: 03/22/13 12:30

Method: 8260B SIM - Volatile Organic Compounds (GC/MS)

Analyte	Result	Qualifier	RL	MDL	Unit	D	Prepared	Analyzed	Dil Fac
1,4-Dioxane	ND		1.6		ug/L			03/25/13 15:38	1

Surrogate	*%Recovery*	*Qualifier*	*Limits*	*Prepared*	*Analyzed*	*Dil Fac*
TBA-d9 (Surr)	*108*		*50 - 150*		*03/25/13 15:38*	*1*
Dibromofluoromethane (Surr)	*90*		*50 - 150*		*03/25/13 15:38*	*1*

Method: 8260C - Volatile Organic Compounds (GC/MS)

Analyte	Result	Qualifier	RL	MDL	Unit	D	Prepared	Analyzed	Dil Fac
1,1,1,2-Tetrachloroethane	ND		1.0		ug/L			03/22/13 20:08	1
1,1,1-Trichloroethane	ND		1.0		ug/L			03/22/13 20:08	1
1,1,2,2-Tetrachloroethane	ND		0.50		ug/L			03/22/13 20:08	1
1,1,2-Trichloroethane	ND		1.0		ug/L			03/22/13 20:08	1
1,1-Dichloroethane	ND		1.0		ug/L			03/22/13 20:08	1
1,1-Dichloroethene	ND		1.0		ug/L			03/22/13 20:08	1
1,1-Dichloropropene	ND		1.0		ug/L			03/22/13 20:08	1
1,2,3-Trichlorobenzene	ND		1.0		ug/L			03/22/13 20:08	1
1,2,3-Trichloropropane	ND		1.0		ug/L			03/22/13 20:08	1
1,2,4-Trichlorobenzene	ND		1.0		ug/L			03/22/13 20:08	1
1,2,4-Trimethylbenzene	ND		1.0		ug/L			03/22/13 20:08	1
1,2-Dibromo-3-Chloropropane	ND		5.0		ug/L			03/22/13 20:08	1
1,2-Dichlorobenzene	ND		1.0		ug/L			03/22/13 20:08	1
1,2-Dichloroethane	ND		1.0		ug/L			03/22/13 20:08	1
1,2-Dichloropropane	ND		1.0		ug/L			03/22/13 20:08	1
1,3,5-Trimethylbenzene	ND		1.0		ug/L			03/22/13 20:08	1
1,3-Dichlorobenzene	ND		1.0		ug/L			03/22/13 20:08	1
1,3-Dichloropropane	ND		1.0		ug/L			03/22/13 20:08	1
1,4-Dichlorobenzene	ND		1.0		ug/L			03/22/13 20:08	1
1,4-Dioxane	ND		50		ug/L			03/22/13 20:08	1
2,2-Dichloropropane	ND		1.0		ug/L			03/22/13 20:08	1
2-Butanone (MEK)	ND		10		ug/L			03/22/13 20:08	1
2-Chlorotoluene	ND		1.0		ug/L			03/22/13 20:08	1
2-Hexanone	ND		10		ug/L			03/22/13 20:08	1
4-Chlorotoluene	ND		1.0		ug/L			03/22/13 20:08	1
4-Isopropyltoluene	ND		1.0		ug/L			03/22/13 20:08	1
4-Methyl-2-pentanone (MIBK)	ND		10		ug/L			03/22/13 20:08	1
Acetone	ND		50		ug/L			03/22/13 20:08	1
Benzene	ND		1.0		ug/L			03/22/13 20:08	1
Bromobenzene	ND		1.0		ug/L			03/22/13 20:08	1
Bromoform	ND		1.0		ug/L			03/22/13 20:08	1
Bromomethane	ND		2.0		ug/L			03/22/13 20:08	1
Carbon disulfide	ND		10		ug/L			03/22/13 20:08	1
Carbon tetrachloride	ND		1.0		ug/L			03/22/13 20:08	1
Chlorobenzene	ND		1.0		ug/L			03/22/13 20:08	1
Chlorobromomethane	ND		1.0		ug/L			03/22/13 20:08	1
Chlorodibromomethane	ND		0.50		ug/L			03/22/13 20:08	1
Chloroethane	ND		2.0		ug/L			03/22/13 20:08	1
Chloroform	ND		1.0		ug/L			03/22/13 20:08	1
Chloromethane	ND		2.0		ug/L			03/22/13 20:08	1
cis-1,2-Dichloroethene	**17**		1.0		ug/L			03/22/13 20:08	1
cis-1,3-Dichloropropene	ND		0.40		ug/L			03/22/13 20:08	1

Client Sample ID: MW1025D-20130321-01

Lab Sample ID: 480-34808-7

Date Collected: 03/21/13 11:35

Matrix: Water

Date Received: 03/22/13 12:30

Method: 8260C - Volatile Organic Compounds (GC/MS) (Continued)

Analyte	Result	Qualifier	RL	MDL	Unit	D	Prepared	Analyzed	Dil Fac
Dichlorobromomethane	ND		0.50		ug/L			03/22/13 20:08	1
Dichlorodifluoromethane	ND	*	1.0		ug/L			03/22/13 20:08	1
Ethyl ether	ND		1.0		ug/L			03/22/13 20:08	1
Ethylbenzene	ND		1.0		ug/L			03/22/13 20:08	1
Ethylene Dibromide	ND		1.0		ug/L			03/22/13 20:08	1
Hexachlorobutadiene	ND		0.40		ug/L			03/22/13 20:08	1
Isopropyl ether	ND		10		ug/L			03/22/13 20:08	1
Isopropylbenzene	ND		1.0		ug/L			03/22/13 20:08	1
Methyl tert-butyl ether	ND		1.0		ug/L			03/22/13 20:08	1
Methylene Chloride	ND		1.0		ug/L			03/22/13 20:08	1
m-Xylene & p-Xylene	ND		2.0		ug/L			03/22/13 20:08	1
Naphthalene	ND		5.0		ug/L			03/22/13 20:08	1
n-Butylbenzene	ND		1.0		ug/L			03/22/13 20:08	1
N-Propylbenzene	ND		1.0		ug/L			03/22/13 20:08	1
o-Xylene	ND		1.0		ug/L			03/22/13 20:08	1
sec-Butylbenzene	ND		1.0		ug/L			03/22/13 20:08	1
Styrene	ND		1.0		ug/L			03/22/13 20:08	1
Tert-amyl methyl ether	ND		5.0		ug/L			03/22/13 20:08	1
Tert-butyl ethyl ether	ND		5.0		ug/L			03/22/13 20:08	1
tert-Butylbenzene	ND		1.0		ug/L			03/22/13 20:08	1
Tetrachloroethene	ND		1.0		ug/L			03/22/13 20:08	1
Tetrahydrofuran	ND		10		ug/L			03/22/13 20:08	1
Toluene	ND		1.0		ug/L			03/22/13 20:08	1
trans-1,2-Dichloroethene	ND		1.0		ug/L			03/22/13 20:08	1
trans-1,3-Dichloropropene	ND		0.40		ug/L			03/22/13 20:08	1
Trichlorofluoromethane	ND		1.0		ug/L			03/22/13 20:08	1
Vinyl chloride	ND		0.50		ug/L			03/22/13 20:08	1
Dibromomethane	ND		1.0		ug/L			03/22/13 20:08	1

Surrogate	*%Recovery*	*Qualifier*	*Limits*	*Prepared*	*Analyzed*	*Dil Fac*
Toluene-d8 (Surr)	*98*		*70 - 130*		*03/22/13 20:08*	*1*
1,2-Dichloroethane-d4 (Surr)	*97*		*70 - 130*		*03/22/13 20:08*	*1*
4-Bromofluorobenzene (Surr)	*108*		*70 - 130*		*03/22/13 20:08*	*1*

Method: 8260C - Volatile Organic Compounds (GC/MS) - DL

Analyte	Result	Qualifier	RL	MDL	Unit	D	Prepared	Analyzed	Dil Fac
Trichloroethene	**110**		2.0		ug/L			03/25/13 12:56	2

Surrogate	*%Recovery*	*Qualifier*	*Limits*	*Prepared*	*Analyzed*	*Dil Fac*
Toluene-d8 (Surr)	*97*		*70 - 130*		*03/25/13 12:56*	*2*
1,2-Dichloroethane-d4 (Surr)	*94*		*70 - 130*		*03/25/13 12:56*	*2*
4-Bromofluorobenzene (Surr)	*110*		*70 - 130*		*03/25/13 12:56*	*2*

Method: 522 MOD - 1,4 Dioxane (GC/MS SIM)

Analyte	Result	Qualifier	RL	MDL	Unit	D	Prepared	Analyzed	Dil Fac
1,4-Dioxane	**0.31**		0.20		ug/L		03/27/13 14:05	03/27/13 18:43	1

Surrogate	*%Recovery*	*Qualifier*	*Limits*	*Prepared*	*Analyzed*	*Dil Fac*
1,4-Dioxane-d8 (Surr)	*82*		*70 - 130*	*03/27/13 14:05*	*03/27/13 18:43*	*1*

Client: ERM-Northeast
Project/Site: IDS Wayland

TestAmerica Job ID: 480-34808-1

Client Sample ID: TB002-20130321-01
Date Collected: 03/21/13 00:00
Date Received: 03/22/13 12:30

Lab Sample ID: 480-34808-8
Matrix: Water

Method: 8260C - Volatile Organic Compounds (GC/MS)

Analyte	Result	Qualifier	RL	MDL	Unit	D	Prepared	Analyzed	Dil Fac
1,1,1,2-Tetrachloroethane	ND		1.0		ug/L			03/22/13 19:15	1
1,1,1-Trichloroethane	ND		1.0		ug/L			03/22/13 19:15	1
1,1,2,2-Tetrachloroethane	ND		0.50		ug/L			03/22/13 19:15	1
1,1,2-Trichloroethane	ND		1.0		ug/L			03/22/13 19:15	1
1,1-Dichloroethane	ND		1.0		ug/L			03/22/13 19:15	1
1,1-Dichloroethene	ND		1.0		ug/L			03/22/13 19:15	1
1,1-Dichloropropene	ND		1.0		ug/L			03/22/13 19:15	1
1,2,3-Trichlorobenzene	ND		1.0		ug/L			03/22/13 19:15	1
1,2,3-Trichloropropane	ND		1.0		ug/L			03/22/13 19:15	1
1,2,4-Trichlorobenzene	ND		1.0		ug/L			03/22/13 19:15	1
1,2,4-Trimethylbenzene	ND		1.0		ug/L			03/22/13 19:15	1
1,2-Dibromo-3-Chloropropane	ND		5.0		ug/L			03/22/13 19:15	1
1,2-Dichlorobenzene	ND		1.0		ug/L			03/22/13 19:15	1
1,2-Dichloroethane	ND		1.0		ug/L			03/22/13 19:15	1
1,2-Dichloropropane	ND		1.0		ug/L			03/22/13 19:15	1
1,3,5-Trimethylbenzene	ND		1.0		ug/L			03/22/13 19:15	1
1,3-Dichlorobenzene	ND		1.0		ug/L			03/22/13 19:15	1
1,3-Dichloropropane	ND		1.0		ug/L			03/22/13 19:15	1
1,4-Dichlorobenzene	ND		1.0		ug/L			03/22/13 19:15	1
1,4-Dioxane	ND		50		ug/L			03/22/13 19:15	1
2,2-Dichloropropane	ND		1.0		ug/L			03/22/13 19:15	1
2-Butanone (MEK)	ND	*	10		ug/L			03/22/13 19:15	1
2-Chlorotoluene	ND		1.0		ug/L			03/22/13 19:15	1
2-Hexanone	ND		10		ug/L			03/22/13 19:15	1
4-Chlorotoluene	ND		1.0		ug/L			03/22/13 19:15	1
4-Isopropyltoluene	ND		1.0		ug/L			03/22/13 19:15	1
4-Methyl-2-pentanone (MIBK)	ND		10		ug/L			03/22/13 19:15	1
Acetone	ND		50		ug/L			03/22/13 19:15	1
Benzene	ND		1.0		ug/L			03/22/13 19:15	1
Bromobenzene	ND		1.0		ug/L			03/22/13 19:15	1
Bromoform	ND		1.0		ug/L			03/22/13 19:15	1
Bromomethane	ND		2.0		ug/L			03/22/13 19:15	1
Carbon disulfide	ND		10		ug/L			03/22/13 19:15	1
Carbon tetrachloride	ND		1.0		ug/L			03/22/13 19:15	1
Chlorobenzene	ND		1.0		ug/L			03/22/13 19:15	1
Chlorobromomethane	ND		1.0		ug/L			03/22/13 19:15	1
Chlorodibromomethane	ND		0.50		ug/L			03/22/13 19:15	1
Chloroethane	ND		2.0		ug/L			03/22/13 19:15	1
Chloroform	ND		1.0		ug/L			03/22/13 19:15	1
Chloromethane	ND		2.0		ug/L			03/22/13 19:15	1
cis-1,2-Dichloroethene	ND		1.0		ug/L			03/22/13 19:15	1
cis-1,3-Dichloropropene	ND		0.40		ug/L			03/22/13 19:15	1
Dichlorobromomethane	ND		0.50		ug/L			03/22/13 19:15	1
Dichlorodifluoromethane	ND		1.0		ug/L			03/22/13 19:15	1
Ethyl ether	ND		1.0		ug/L			03/22/13 19:15	1
Ethylbenzene	ND		1.0		ug/L			03/22/13 19:15	1
Ethylene Dibromide	ND		1.0		ug/L			03/22/13 19:15	1
Hexachlorobutadiene	ND		0.40		ug/L			03/22/13 19:15	1
Isopropyl ether	ND		10		ug/L			03/22/13 19:15	1

Client: ERM-Northeast
Project/Site: IDS Wayland

TestAmerica Job ID: 480-34808-1

Client Sample ID: TB002-20130321-01
Date Collected: 03/21/13 00:00
Date Received: 03/22/13 12:30

Lab Sample ID: 480-34808-8
Matrix: Water

Method: 8260C - Volatile Organic Compounds (GC/MS) (Continued)

Analyte	Result	Qualifier	RL	MDL	Unit	D	Prepared	Analyzed	Dil Fac
Isopropylbenzene	ND		1.0		ug/L			03/22/13 19:15	1
Methyl tert-butyl ether	ND		1.0		ug/L			03/22/13 19:15	1
Methylene Chloride	ND		1.0		ug/L			03/22/13 19:15	1
m-Xylene & p-Xylene	ND		2.0		ug/L			03/22/13 19:15	1
Naphthalene	ND		5.0		ug/L			03/22/13 19:15	1
n-Butylbenzene	ND		1.0		ug/L			03/22/13 19:15	1
N-Propylbenzene	ND		1.0		ug/L			03/22/13 19:15	1
o-Xylene	ND		1.0		ug/L			03/22/13 19:15	1
sec-Butylbenzene	ND		1.0		ug/L			03/22/13 19:15	1
Styrene	ND		1.0		ug/L			03/22/13 19:15	1
Tert-amyl methyl ether	ND		5.0		ug/L			03/22/13 19:15	1
Tert-butyl ethyl ether	ND		5.0		ug/L			03/22/13 19:15	1
tert-Butylbenzene	ND		1.0		ug/L			03/22/13 19:15	1
Tetrachloroethene	ND		1.0		ug/L			03/22/13 19:15	1
Tetrahydrofuran	ND		10		ug/L			03/22/13 19:15	1
Toluene	ND		1.0		ug/L			03/22/13 19:15	1
trans-1,2-Dichloroethene	ND		1.0		ug/L			03/22/13 19:15	1
trans-1,3-Dichloropropene	ND		0.40		ug/L			03/22/13 19:15	1
Trichloroethene	ND		1.0		ug/L			03/22/13 19:15	1
Trichlorofluoromethane	ND		1.0		ug/L			03/22/13 19:15	1
Vinyl chloride	ND		0.50		ug/L			03/22/13 19:15	1
Dibromomethane	ND		1.0		ug/L			03/22/13 19:15	1

Surrogate	*%Recovery*	*Qualifier*	*Limits*	*Prepared*	*Analyzed*	*Dil Fac*
Toluene-d8 (Surr)	*98*		*70 - 130*		*03/22/13 19:15*	*1*
1,2-Dichloroethane-d4 (Surr)	*94*		*70 - 130*		*03/22/13 19:15*	*1*
4-Bromofluorobenzene (Surr)	*100*		*70 - 130*		*03/22/13 19:15*	*1*

Surrogate Summary

Client: ERM-Northeast
Project/Site: IDS Wayland

TestAmerica Job ID: 480-34808-1

Method: 8260B SIM - Volatile Organic Compounds (GC/MS)

Matrix: Water **Prep Type: Total/NA**

		Percent Surrogate Recovery (Acceptance Limits)	
Lab Sample ID	Client Sample ID	BA-d9 (Sur (50-150)	DBFM (50-150)
480-34808-7	MW1025D-20130321-01	108	90
LCS 480-108998/3	Lab Control Sample	105	88
LCSD 480-108998/4	Lab Control Sample Dup	108	88
MB 480-108998/5	Method Blank	114	88

Surrogate Legend

TBA-d9 (Surr) = TBA-d9 (Surr)

DBFM = Dibromofluoromethane (Surr)

Method: 8260C - Volatile Organic Compounds (GC/MS)

Matrix: Water **Prep Type: Total/NA**

		Percent Surrogate Recovery (Acceptance Limits)		
Lab Sample ID	Client Sample ID	TOL (70-130)	12DCE (70-130)	BFB (70-130)
480-34808-1	MW1031-20130321-01	95	92	99
480-34808-2	MW1009-20130321-01	96	95	100
480-34808-3	MW1001M-20130321-01	97	95	100
480-34808-4	MW1001B-20130321-01	94	94	100
480-34808-5	MW1004-20130321-01	98	94	101
480-34808-6	DUP004-20130321-01	96	95	100
480-34808-7	MW1025D-20130321-01	98	97	108
480-34808-7 - DL	MW1025D-20130321-01	97	94	110
480-34808-7 MS	MW1025D-20130321-01	98	102	113
480-34808-7 MSD	MW1025D-20130321-01	99	99	112
480-34808-8	TB002-20130321-01	98	94	100
LCS 480-108684/4	Lab Control Sample	97	93	102
LCS 480-108686/4	Lab Control Sample	97	100	109
LCS 480-108960/4	Lab Control Sample	94	93	111
LCSD 480-108684/5	Lab Control Sample Dup	98	92	103
LCSD 480-108686/5	Lab Control Sample Dup	96	99	105
LCSD 480-108960/5	Lab Control Sample Dup	97	95	114
MB 480-108684/7	Method Blank	96	94	99
MB 480-108686/7	Method Blank	100	94	109
MB 480-108960/7	Method Blank	95	94	110

Surrogate Legend

TOL = Toluene-d8 (Surr)

12DCE = 1,2-Dichloroethane-d4 (Surr)

BFB = 4-Bromofluorobenzene (Surr)

Method: 522 MOD - 1,4 Dioxane (GC/MS SIM)

Matrix: Water **Prep Type: Total/NA**

		Percent Surrogate Recovery (Acceptance Limits)
Lab Sample ID	Client Sample ID	14DD8 (70-130)
480-34808-7	MW1025D-20130321-01	82
LCS 200-53504/2-A	Lab Control Sample	84
MB 200-53504/1-A	Method Blank	79

Surrogate Summary

Client: ERM-Northeast
Project/Site: IDS Wayland

TestAmerica Job ID: 480-34808-1

Surrogate Legend

14DD8 = 1,4-Dioxane-d8 (Surr)

Method: 8260B SIM - Volatile Organic Compounds (GC/MS)

Lab Sample ID: MB 480-108998/5 — **Client Sample ID: Method Blank**
Matrix: Water — **Prep Type: Total/NA**
Analysis Batch: 108998

Analyte	MB Result	MB Qualifier	RL	MDL	Unit	D	Prepared	Analyzed	Dil Fac
1,4-Dioxane	ND		1.6		ug/L			03/25/13 12:48	1

Surrogate	*MB %Recovery*	*MB Qualifier*	*Limits*	*Prepared*	*Analyzed*	*Dil Fac*
TBA-d9 (Surr)	*114*		*50 - 150*		*03/25/13 12:48*	*1*
Dibromofluoromethane (Surr)	*88*		*50 - 150*		*03/25/13 12:48*	*1*

Lab Sample ID: LCS 480-108998/3 — **Client Sample ID: Lab Control Sample**
Matrix: Water — **Prep Type: Total/NA**
Analysis Batch: 108998

Analyte	Spike Added	LCS Result	LCS Qualifier	Unit	D	%Rec	%Rec. Limits
1,4-Dioxane	16.0	16.2		ug/L		101	

Surrogate	*LCS %Recovery*	*LCS Qualifier*	*Limits*
TBA-d9 (Surr)	*105*		*50 - 150*
Dibromofluoromethane (Surr)	*88*		*50 - 150*

Lab Sample ID: LCSD 480-108998/4 — **Client Sample ID: Lab Control Sample Dup**
Matrix: Water — **Prep Type: Total/NA**
Analysis Batch: 108998

Analyte	Spike Added	LCSD Result	LCSD Qualifier	Unit	D	%Rec	%Rec. Limits	RPD	RPD Limit
1,4-Dioxane	16.0	16.0		ug/L		100		2	

Surrogate	*LCSD %Recovery*	*LCSD Qualifier*	*Limits*
TBA-d9 (Surr)	*108*		*50 - 150*
Dibromofluoromethane (Surr)	*88*		*50 - 150*

Method: 8260C - Volatile Organic Compounds (GC/MS)

Lab Sample ID: MB 480-108684/7 — **Client Sample ID: Method Blank**
Matrix: Water — **Prep Type: Total/NA**
Analysis Batch: 108684

Analyte	MB Result	MB Qualifier	RL	MDL	Unit	D	Prepared	Analyzed	Dil Fac
1,1,1,2-Tetrachloroethane	ND		1.0		ug/L			03/22/13 11:37	1
1,1,1-Trichloroethane	ND		1.0		ug/L			03/22/13 11:37	1
1,1,2,2-Tetrachloroethane	ND		0.50		ug/L			03/22/13 11:37	1
1,1,2-Trichloroethane	ND		1.0		ug/L			03/22/13 11:37	1
1,1-Dichloroethane	ND		1.0		ug/L			03/22/13 11:37	1
1,1-Dichloroethene	ND		1.0		ug/L			03/22/13 11:37	1
1,1-Dichloropropene	ND		1.0		ug/L			03/22/13 11:37	1
1,2,3-Trichlorobenzene	ND		1.0		ug/L			03/22/13 11:37	1
1,2,3-Trichloropropane	ND		1.0		ug/L			03/22/13 11:37	1
1,2,4-Trichlorobenzene	ND		1.0		ug/L			03/22/13 11:37	1
1,2,4-Trimethylbenzene	ND		1.0		ug/L			03/22/13 11:37	1
1,2-Dibromo-3-Chloropropane	ND		5.0		ug/L			03/22/13 11:37	1

Method: 8260C - Volatile Organic Compounds (GC/MS) (Continued)

Lab Sample ID: MB 480-108684/7
Matrix: Water
Analysis Batch: 108684

Client Sample ID: Method Blank
Prep Type: Total/NA

Analyte	MB Result	MB Qualifier	RL	MDL	Unit	D	Prepared	Analyzed	Dil Fac
1,2-Dichlorobenzene	ND		1.0		ug/L			03/22/13 11:37	1
1,2-Dichloroethane	ND		1.0		ug/L			03/22/13 11:37	1
1,2-Dichloropropane	ND		1.0		ug/L			03/22/13 11:37	1
1,3,5-Trimethylbenzene	ND		1.0		ug/L			03/22/13 11:37	1
1,3-Dichlorobenzene	ND		1.0		ug/L			03/22/13 11:37	1
1,3-Dichloropropane	ND		1.0		ug/L			03/22/13 11:37	1
1,4-Dichlorobenzene	ND		1.0		ug/L			03/22/13 11:37	1
1,4-Dioxane	ND		50		ug/L			03/22/13 11:37	1
2,2-Dichloropropane	ND		1.0		ug/L			03/22/13 11:37	1
2-Butanone (MEK)	ND		10		ug/L			03/22/13 11:37	1
2-Chlorotoluene	ND		1.0		ug/L			03/22/13 11:37	1
2-Hexanone	ND		10		ug/L			03/22/13 11:37	1
4-Chlorotoluene	ND		1.0		ug/L			03/22/13 11:37	1
4-Isopropyltoluene	ND		1.0		ug/L			03/22/13 11:37	1
4-Methyl-2-pentanone (MIBK)	ND		10		ug/L			03/22/13 11:37	1
Acetone	ND		50		ug/L			03/22/13 11:37	1
Benzene	ND		1.0		ug/L			03/22/13 11:37	1
Bromobenzene	ND		1.0		ug/L			03/22/13 11:37	1
Bromoform	ND		1.0		ug/L			03/22/13 11:37	1
Bromomethane	ND		2.0		ug/L			03/22/13 11:37	1
Carbon disulfide	ND		10		ug/L			03/22/13 11:37	1
Carbon tetrachloride	ND		1.0		ug/L			03/22/13 11:37	1
Chlorobenzene	ND		1.0		ug/L			03/22/13 11:37	1
Chlorobromomethane	ND		1.0		ug/L			03/22/13 11:37	1
Chlorodibromomethane	ND		0.50		ug/L			03/22/13 11:37	1
Chloroethane	ND		2.0		ug/L			03/22/13 11:37	1
Chloroform	ND		1.0		ug/L			03/22/13 11:37	1
Chloromethane	ND		2.0		ug/L			03/22/13 11:37	1
cis-1,2-Dichloroethene	ND		1.0		ug/L			03/22/13 11:37	1
cis-1,3-Dichloropropene	ND		0.40		ug/L			03/22/13 11:37	1
Dichlorobromomethane	ND		0.50		ug/L			03/22/13 11:37	1
Dichlorodifluoromethane	ND		1.0		ug/L			03/22/13 11:37	1
Ethyl ether	ND		1.0		ug/L			03/22/13 11:37	1
Ethylbenzene	ND		1.0		ug/L			03/22/13 11:37	1
Ethylene Dibromide	ND		1.0		ug/L			03/22/13 11:37	1
Hexachlorobutadiene	ND		0.40		ug/L			03/22/13 11:37	1
Isopropyl ether	ND		10		ug/L			03/22/13 11:37	1
Isopropylbenzene	ND		1.0		ug/L			03/22/13 11:37	1
Methyl tert-butyl ether	ND		1.0		ug/L			03/22/13 11:37	1
Methylene Chloride	ND		1.0		ug/L			03/22/13 11:37	1
m-Xylene & p-Xylene	ND		2.0		ug/L			03/22/13 11:37	1
Naphthalene	ND		5.0		ug/L			03/22/13 11:37	1
n-Butylbenzene	ND		1.0		ug/L			03/22/13 11:37	1
N-Propylbenzene	ND		1.0		ug/L			03/22/13 11:37	1
o-Xylene	ND		1.0		ug/L			03/22/13 11:37	1
sec-Butylbenzene	ND		1.0		ug/L			03/22/13 11:37	1
Styrene	ND		1.0		ug/L			03/22/13 11:37	1
Tert-amyl methyl ether	ND		5.0		ug/L			03/22/13 11:37	1

Method: 8260C - Volatile Organic Compounds (GC/MS) (Continued)

Lab Sample ID: MB 480-108684/7
Matrix: Water
Analysis Batch: 108684

Client Sample ID: Method Blank
Prep Type: Total/NA

Analyte	MB Result	MB Qualifier	RL	MDL	Unit	D	Prepared	Analyzed	Dil Fac
Tert-butyl ethyl ether	ND		5.0		ug/L			03/22/13 11:37	1
tert-Butylbenzene	ND		1.0		ug/L			03/22/13 11:37	1
Tetrachloroethene	ND		1.0		ug/L			03/22/13 11:37	1
Tetrahydrofuran	ND		10		ug/L			03/22/13 11:37	1
Toluene	ND		1.0		ug/L			03/22/13 11:37	1
trans-1,2-Dichloroethene	ND		1.0		ug/L			03/22/13 11:37	1
trans-1,3-Dichloropropene	ND		0.40		ug/L			03/22/13 11:37	1
Trichloroethene	ND		1.0		ug/L			03/22/13 11:37	1
Trichlorofluoromethane	ND		1.0		ug/L			03/22/13 11:37	1
Vinyl chloride	ND		0.50		ug/L			03/22/13 11:37	1
Dibromomethane	ND		1.0		ug/L			03/22/13 11:37	1

Surrogate	*MB %Recovery*	*MB Qualifier*	*Limits*	*Prepared*	*Analyzed*	*Dil Fac*
Toluene-d8 (Surr)	*96*		*70 - 130*		*03/22/13 11:37*	*1*
1,2-Dichloroethane-d4 (Surr)	*94*		*70 - 130*		*03/22/13 11:37*	*1*
4-Bromofluorobenzene (Surr)	*99*		*70 - 130*		*03/22/13 11:37*	*1*

Lab Sample ID: LCS 480-108684/4
Matrix: Water
Analysis Batch: 108684

Client Sample ID: Lab Control Sample
Prep Type: Total/NA

Analyte	Spike Added	LCS Result	LCS Qualifier	Unit	D	%Rec	%Rec. Limits
1,1,1,2-Tetrachloroethane	25.0	23.8		ug/L		95	70 - 130
1,1,1-Trichloroethane	25.0	21.8		ug/L		87	70 - 130
1,1,2,2-Tetrachloroethane	25.0	24.3		ug/L		97	70 - 130
1,1,2-Trichloroethane	25.0	23.8		ug/L		95	70 - 130
1,1-Dichloroethane	25.0	22.7		ug/L		91	70 - 130
1,1-Dichloroethene	25.0	24.1		ug/L		96	70 - 130
1,1-Dichloropropene	25.0	23.4		ug/L		93	70 - 130
1,2,3-Trichlorobenzene	25.0	25.4		ug/L		102	70 - 130
1,2,3-Trichloropropane	25.0	24.8		ug/L		99	70 - 130
1,2,4-Trichlorobenzene	25.0	26.2		ug/L		105	70 - 130
1,2,4-Trimethylbenzene	25.0	23.6		ug/L		95	70 - 130
1,2-Dibromo-3-Chloropropane	25.0	23.7		ug/L		95	70 - 130
1,2-Dichlorobenzene	25.0	24.6		ug/L		98	70 - 130
1,2-Dichloroethane	25.0	22.6		ug/L		90	70 - 130
1,2-Dichloropropane	25.0	23.3		ug/L		93	70 - 130
1,3,5-Trimethylbenzene	25.0	23.5		ug/L		94	70 - 130
1,3-Dichlorobenzene	25.0	24.3		ug/L		97	70 - 130
1,3-Dichloropropane	25.0	23.2		ug/L		93	70 - 130
1,4-Dichlorobenzene	25.0	24.7		ug/L		99	70 - 130
1,4-Dioxane	1000	920		ug/L		92	70 - 130
2,2-Dichloropropane	25.0	21.5		ug/L		86	70 - 130
2-Butanone (MEK)	125	167	*	ug/L		133	70 - 130
2-Chlorotoluene	25.0	23.3		ug/L		93	70 - 130
2-Hexanone	125	117		ug/L		94	70 - 130
4-Chlorotoluene	25.0	20.7		ug/L		83	70 - 130
4-Isopropyltoluene	25.0	24.1		ug/L		97	70 - 130

Method: 8260C - Volatile Organic Compounds (GC/MS) (Continued)

Lab Sample ID: LCS 480-108684/4
Matrix: Water
Analysis Batch: 108684

Client Sample ID: Lab Control Sample
Prep Type: Total/NA

Analyte	Spike Added	LCS Result	LCS Qualifier	Unit	D	%Rec	%Rec. Limits
4-Methyl-2-pentanone (MIBK)	125	116		ug/L		93	70 - 130
Acetone	125	124		ug/L		99	70 - 130
Benzene	25.0	23.2		ug/L		93	70 - 130
Bromobenzene	25.0	24.1		ug/L		96	70 - 130
Bromoform	25.0	22.1		ug/L		89	70 - 130
Bromomethane	25.0	21.7		ug/L		87	70 - 130
Carbon disulfide	25.0	23.4		ug/L		94	70 - 130
Carbon tetrachloride	25.0	22.1		ug/L		88	70 - 130
Chlorobenzene	25.0	23.4		ug/L		94	70 - 130
Chlorobromomethane	25.0	25.4		ug/L		102	70 - 130
Chlorodibromomethane	25.0	22.9		ug/L		92	70 - 130
Chloroethane	25.0	22.5		ug/L		90	70 - 130
Chloroform	25.0	22.5		ug/L		90	70 - 130
Chloromethane	25.0	24.2		ug/L		97	70 - 130
cis-1,2-Dichloroethene	25.0	23.4		ug/L		93	70 - 130
cis-1,3-Dichloropropene	25.0	23.4		ug/L		94	70 - 130
Dichlorobromomethane	25.0	22.7		ug/L		91	70 - 130
Dichlorodifluoromethane	50.0	60.5		ug/L		121	70 - 130
Ethyl ether	25.0	24.6		ug/L		98	70 - 130
Ethylbenzene	25.0	22.8		ug/L		91	70 - 130
Ethylene Dibromide	25.0	23.8		ug/L		95	70 - 130
Hexachlorobutadiene	25.0	24.4		ug/L		98	70 - 130
Isopropyl ether	25.0	24.7		ug/L		99	70 - 130
Isopropylbenzene	25.0	23.2		ug/L		93	70 - 130
Methyl tert-butyl ether	25.0	24.0		ug/L		96	70 - 130
Methylene Chloride	25.0	22.4		ug/L		90	70 - 130
m-Xylene & p-Xylene	50.0	46.9		ug/L		94	70 - 130
Naphthalene	25.0	24.7		ug/L		99	70 - 130
n-Butylbenzene	25.0	23.4		ug/L		94	70 - 130
N-Propylbenzene	25.0	23.1		ug/L		92	70 - 130
o-Xylene	25.0	23.4		ug/L		94	70 - 130
sec-Butylbenzene	25.0	23.8		ug/L		95	70 - 130
Styrene	25.0	23.5		ug/L		94	70 - 130
Tert-amyl methyl ether	25.0	24.2		ug/L		97	70 - 130
Tert-butyl ethyl ether	25.0	23.8		ug/L		95	70 - 130
tert-Butylbenzene	25.0	24.9		ug/L		100	70 - 130
Tetrachloroethene	25.0	24.9		ug/L		100	70 - 130
Tetrahydrofuran	125	122		ug/L		98	70 - 130
Toluene	25.0	23.2		ug/L		93	70 - 130
trans-1,2-Dichloroethene	25.0	24.2		ug/L		97	70 - 130
trans-1,3-Dichloropropene	25.0	22.5		ug/L		90	70 - 130
Trichloroethene	25.0	23.8		ug/L		95	70 - 130
Trichlorofluoromethane	25.0	24.6		ug/L		99	70 - 130
Vinyl chloride	25.0	22.4		ug/L		90	70 - 130
Dibromomethane	25.0	24.0		ug/L		96	70 - 130

Surrogate	*LCS %Recovery*	*LCS Qualifier*	*Limits*
Toluene-d8 (Surr)	*97*		*70 - 130*

Method: 8260C - Volatile Organic Compounds (GC/MS) (Continued)

Lab Sample ID: LCS 480-108684/4
Matrix: Water
Analysis Batch: 108684

Client Sample ID: Lab Control Sample
Prep Type: Total/NA

Surrogate	LCS %Recovery	LCS Qualifier	Limits
1,2-Dichloroethane-d4 (Surr)	93		70 - 130
4-Bromofluorobenzene (Surr)	102		70 - 130

Lab Sample ID: LCSD 480-108684/5
Matrix: Water
Analysis Batch: 108684

Client Sample ID: Lab Control Sample Dup
Prep Type: Total/NA

Analyte	Spike Added	LCSD Result	LCSD Qualifier	Unit	D	%Rec	%Rec. Limits	RPD	RPD Limit
1,1,1,2-Tetrachloroethane	25.0	25.3		ug/L		101	70 - 130	6	20
1,1,1-Trichloroethane	25.0	23.4		ug/L		94	70 - 130	7	20
1,1,2,2-Tetrachloroethane	25.0	24.3		ug/L		97	70 - 130	0	20
1,1,2-Trichloroethane	25.0	24.6		ug/L		98	70 - 130	3	20
1,1-Dichloroethane	25.0	23.6		ug/L		94	70 - 130	4	20
1,1-Dichloroethene	25.0	23.5		ug/L		94	70 - 130	2	20
1,1-Dichloropropene	25.0	24.2		ug/L		97	70 - 130	4	20
1,2,3-Trichlorobenzene	25.0	25.7		ug/L		103	70 - 130	1	20
1,2,3-Trichloropropane	25.0	24.5		ug/L		98	70 - 130	1	20
1,2,4-Trichlorobenzene	25.0	26.7		ug/L		107	70 - 130	2	20
1,2,4-Trimethylbenzene	25.0	24.0		ug/L		96	70 - 130	1	20
1,2-Dibromo-3-Chloropropane	25.0	23.3		ug/L		93	70 - 130	1	20
1,2-Dichlorobenzene	25.0	24.6		ug/L		98	70 - 130	0	20
1,2-Dichloroethane	25.0	22.3		ug/L		89	70 - 130	1	20
1,2-Dichloropropane	25.0	23.3		ug/L		93	70 - 130	0	20
1,3,5-Trimethylbenzene	25.0	24.0		ug/L		96	70 - 130	2	20
1,3-Dichlorobenzene	25.0	24.8		ug/L		99	70 - 130	2	20
1,3-Dichloropropane	25.0	23.3		ug/L		93	70 - 130	0	20
1,4-Dichlorobenzene	25.0	24.9		ug/L		100	70 - 130	1	20
1,4-Dioxane	1000	907		ug/L		91	70 - 130	1	20
2,2-Dichloropropane	25.0	22.5		ug/L		90	70 - 130	5	20
2-Butanone (MEK)	125	164	*	ug/L		131	70 - 130	2	20
2-Chlorotoluene	25.0	24.4		ug/L		98	70 - 130	5	20
2-Hexanone	125	117		ug/L		93	70 - 130	0	20
4-Chlorotoluene	25.0	21.2		ug/L		85	70 - 130	2	20
4-Isopropyltoluene	25.0	24.8		ug/L		99	70 - 130	3	20
4-Methyl-2-pentanone (MIBK)	125	117		ug/L		93	70 - 130	1	20
Acetone	125	123		ug/L		99	70 - 130	1	20
Benzene	25.0	23.7		ug/L		95	70 - 130	2	20
Bromobenzene	25.0	24.8		ug/L		99	70 - 130	3	20
Bromoform	25.0	23.3		ug/L		93	70 - 130	5	20
Bromomethane	25.0	23.7		ug/L		95	70 - 130	9	20
Carbon disulfide	25.0	24.3		ug/L		97	70 - 130	4	20
Carbon tetrachloride	25.0	23.2		ug/L		93	70 - 130	5	20
Chlorobenzene	25.0	24.4		ug/L		98	70 - 130	4	20
Chlorobromomethane	25.0	25.5		ug/L		102	70 - 130	0	20
Chlorodibromomethane	25.0	24.2		ug/L		97	70 - 130	6	20
Chloroethane	25.0	23.4		ug/L		94	70 - 130	4	20
Chloroform	25.0	22.9		ug/L		92	70 - 130	2	20
Chloromethane	25.0	23.6		ug/L		95	70 - 130	2	20

Method: 8260C - Volatile Organic Compounds (GC/MS) (Continued)

Lab Sample ID: LCSD 480-108684/5
Matrix: Water
Analysis Batch: 108684

Client Sample ID: Lab Control Sample Dup
Prep Type: Total/NA

Analyte	Spike Added	LCSD Result	LCSD Qualifier	Unit	D	%Rec	%Rec. Limits	RPD	RPD Limit
cis-1,2-Dichloroethene	25.0	24.8		ug/L		99	70 - 130	6	20
cis-1,3-Dichloropropene	25.0	24.0		ug/L		96	70 - 130	2	20
Dichlorobromomethane	25.0	22.7		ug/L		91	70 - 130	0	20
Dichlorodifluoromethane	50.0	62.6		ug/L		125	70 - 130	3	20
Ethyl ether	25.0	24.7		ug/L		99	70 - 130	1	20
Ethylbenzene	25.0	23.9		ug/L		95	70 - 130	5	20
Ethylene Dibromide	25.0	24.5		ug/L		98	70 - 130	3	20
Hexachlorobutadiene	25.0	25.8		ug/L		103	70 - 130	6	20
Isopropyl ether	25.0	25.1		ug/L		101	70 - 130	2	20
Isopropylbenzene	25.0	24.3		ug/L		97	70 - 130	4	20
Methyl tert-butyl ether	25.0	24.0		ug/L		96	70 - 130	0	20
Methylene Chloride	25.0	22.4		ug/L		89	70 - 130	0	20
m-Xylene & p-Xylene	50.0	48.3		ug/L		97	70 - 130	3	20
Naphthalene	25.0	24.8		ug/L		99	70 - 130	0	20
n-Butylbenzene	25.0	24.0		ug/L		96	70 - 130	2	20
N-Propylbenzene	25.0	24.1		ug/L		96	70 - 130	4	20
o-Xylene	25.0	24.5		ug/L		98	70 - 130	5	20
sec-Butylbenzene	25.0	24.5		ug/L		98	70 - 130	3	20
Styrene	25.0	24.3		ug/L		97	70 - 130	3	20
Tert-amyl methyl ether	25.0	24.3		ug/L		97	70 - 130	0	20
Tert-butyl ethyl ether	25.0	24.0		ug/L		96	70 - 130	1	20
tert-Butylbenzene	25.0	25.2		ug/L		101	70 - 130	1	20
Tetrachloroethene	25.0	26.3		ug/L		105	70 - 130	5	20
Tetrahydrofuran	125	119		ug/L		95	70 - 130	3	20
Toluene	25.0	24.2		ug/L		97	70 - 130	4	20
trans-1,2-Dichloroethene	25.0	24.0		ug/L		96	70 - 130	1	20
trans-1,3-Dichloropropene	25.0	23.4		ug/L		94	70 - 130	4	20
Trichloroethene	25.0	24.2		ug/L		97	70 - 130	2	20
Trichlorofluoromethane	25.0	25.2		ug/L		101	70 - 130	2	20
Vinyl chloride	25.0	22.8		ug/L		91	70 - 130	2	20
Dibromomethane	25.0	23.9		ug/L		95	70 - 130	1	20

Surrogate	*LCSD %Recovery*	*LCSD Qualifier*	*Limits*
Toluene-d8 (Surr)	*98*		*70 - 130*
1,2-Dichloroethane-d4 (Surr)	*92*		*70 - 130*
4-Bromofluorobenzene (Surr)	*103*		*70 - 130*

Lab Sample ID: MB 480-108686/7
Matrix: Water
Analysis Batch: 108686

Client Sample ID: Method Blank
Prep Type: Total/NA

Analyte	MB Result	MB Qualifier	RL	MDL	Unit	D	Prepared	Analyzed	Dil Fac
1,1,1,2-Tetrachloroethane	ND		1.0		ug/L			03/22/13 11:59	1
1,1,1-Trichloroethane	ND		1.0		ug/L			03/22/13 11:59	1
1,1,2,2-Tetrachloroethane	ND		0.50		ug/L			03/22/13 11:59	1
1,1,2-Trichloroethane	ND		1.0		ug/L			03/22/13 11:59	1
1,1-Dichloroethane	ND		1.0		ug/L			03/22/13 11:59	1
1,1-Dichloroethene	ND		1.0		ug/L			03/22/13 11:59	1

Method: 8260C - Volatile Organic Compounds (GC/MS) (Continued)

Lab Sample ID: MB 480-108686/7
Matrix: Water
Analysis Batch: 108686

Client Sample ID: Method Blank
Prep Type: Total/NA

Analyte	MB Result	MB Qualifier	RL	MDL	Unit	D	Prepared	Analyzed	Dil Fac
1,1-Dichloropropene	ND		1.0		ug/L			03/22/13 11:59	1
1,2,3-Trichlorobenzene	ND		1.0		ug/L			03/22/13 11:59	1
1,2,3-Trichloropropane	ND		1.0		ug/L			03/22/13 11:59	1
1,2,4-Trichlorobenzene	ND		1.0		ug/L			03/22/13 11:59	1
1,2,4-Trimethylbenzene	ND		1.0		ug/L			03/22/13 11:59	1
1,2-Dibromo-3-Chloropropane	ND		5.0		ug/L			03/22/13 11:59	1
1,2-Dichlorobenzene	ND		1.0		ug/L			03/22/13 11:59	1
1,2-Dichloroethane	ND		1.0		ug/L			03/22/13 11:59	1
1,2-Dichloropropane	ND		1.0		ug/L			03/22/13 11:59	1
1,3,5-Trimethylbenzene	ND		1.0		ug/L			03/22/13 11:59	1
1,3-Dichlorobenzene	ND		1.0		ug/L			03/22/13 11:59	1
1,3-Dichloropropane	ND		1.0		ug/L			03/22/13 11:59	1
1,4-Dichlorobenzene	ND		1.0		ug/L			03/22/13 11:59	1
1,4-Dioxane	ND		50		ug/L			03/22/13 11:59	1
2,2-Dichloropropane	ND		1.0		ug/L			03/22/13 11:59	1
2-Butanone (MEK)	ND		10		ug/L			03/22/13 11:59	1
2-Chlorotoluene	ND		1.0		ug/L			03/22/13 11:59	1
2-Hexanone	ND		10		ug/L			03/22/13 11:59	1
4-Chlorotoluene	ND		1.0		ug/L			03/22/13 11:59	1
4-Isopropyltoluene	ND		1.0		ug/L			03/22/13 11:59	1
4-Methyl-2-pentanone (MIBK)	ND		10		ug/L			03/22/13 11:59	1
Acetone	ND		50		ug/L			03/22/13 11:59	1
Benzene	ND		1.0		ug/L			03/22/13 11:59	1
Bromobenzene	ND		1.0		ug/L			03/22/13 11:59	1
Bromoform	ND		1.0		ug/L			03/22/13 11:59	1
Bromomethane	ND		2.0		ug/L			03/22/13 11:59	1
Carbon disulfide	ND		10		ug/L			03/22/13 11:59	1
Carbon tetrachloride	ND		1.0		ug/L			03/22/13 11:59	1
Chlorobenzene	ND		1.0		ug/L			03/22/13 11:59	1
Chlorobromomethane	ND		1.0		ug/L			03/22/13 11:59	1
Chlorodibromomethane	ND		0.50		ug/L			03/22/13 11:59	1
Chloroethane	ND		2.0		ug/L			03/22/13 11:59	1
Chloroform	ND		1.0		ug/L			03/22/13 11:59	1
Chloromethane	ND		2.0		ug/L			03/22/13 11:59	1
cis-1,2-Dichloroethene	ND		1.0		ug/L			03/22/13 11:59	1
cis-1,3-Dichloropropene	ND		0.40		ug/L			03/22/13 11:59	1
Dichlorobromomethane	ND		0.50		ug/L			03/22/13 11:59	1
Dichlorodifluoromethane	ND		1.0		ug/L			03/22/13 11:59	1
Ethyl ether	ND		1.0		ug/L			03/22/13 11:59	1
Ethylbenzene	ND		1.0		ug/L			03/22/13 11:59	1
Ethylene Dibromide	ND		1.0		ug/L			03/22/13 11:59	1
Hexachlorobutadiene	ND		0.40		ug/L			03/22/13 11:59	1
Isopropyl ether	ND		10		ug/L			03/22/13 11:59	1
Isopropylbenzene	ND		1.0		ug/L			03/22/13 11:59	1
Methyl tert-butyl ether	ND		1.0		ug/L			03/22/13 11:59	1
Methylene Chloride	ND		1.0		ug/L			03/22/13 11:59	1
m-Xylene & p-Xylene	ND		2.0		ug/L			03/22/13 11:59	1
Naphthalene	ND		5.0		ug/L			03/22/13 11:59	1

Method: 8260C - Volatile Organic Compounds (GC/MS) (Continued)

Lab Sample ID: MB 480-108686/7
Matrix: Water
Analysis Batch: 108686

Client Sample ID: Method Blank
Prep Type: Total/NA

Analyte	MB Result	MB Qualifier	RL	MDL	Unit	D	Prepared	Analyzed	Dil Fac
n-Butylbenzene	ND		1.0		ug/L			03/22/13 11:59	1
N-Propylbenzene	ND		1.0		ug/L			03/22/13 11:59	1
o-Xylene	ND		1.0		ug/L			03/22/13 11:59	1
sec-Butylbenzene	ND		1.0		ug/L			03/22/13 11:59	1
Styrene	ND		1.0		ug/L			03/22/13 11:59	1
Tert-amyl methyl ether	ND		5.0		ug/L			03/22/13 11:59	1
Tert-butyl ethyl ether	ND		5.0		ug/L			03/22/13 11:59	1
tert-Butylbenzene	ND		1.0		ug/L			03/22/13 11:59	1
Tetrachloroethene	ND		1.0		ug/L			03/22/13 11:59	1
Tetrahydrofuran	ND		10		ug/L			03/22/13 11:59	1
Toluene	ND		1.0		ug/L			03/22/13 11:59	1
trans-1,2-Dichloroethene	ND		1.0		ug/L			03/22/13 11:59	1
trans-1,3-Dichloropropene	ND		0.40		ug/L			03/22/13 11:59	1
Trichloroethene	ND		1.0		ug/L			03/22/13 11:59	1
Trichlorofluoromethane	ND		1.0		ug/L			03/22/13 11:59	1
Vinyl chloride	ND		0.50		ug/L			03/22/13 11:59	1
Dibromomethane	ND		1.0		ug/L			03/22/13 11:59	1

Surrogate	*MB %Recovery*	*MB Qualifier*	*Limits*	*Prepared*	*Analyzed*	*Dil Fac*
Toluene-d8 (Surr)	*100*		*70 - 130*		*03/22/13 11:59*	*1*
1,2-Dichloroethane-d4 (Surr)	*94*		*70 - 130*		*03/22/13 11:59*	*1*
4-Bromofluorobenzene (Surr)	*109*		*70 - 130*		*03/22/13 11:59*	*1*

Lab Sample ID: LCS 480-108686/4
Matrix: Water
Analysis Batch: 108686

Client Sample ID: Lab Control Sample
Prep Type: Total/NA

Analyte	Spike Added	LCS Result	LCS Qualifier	Unit	D	%Rec	%Rec. Limits
1,1,1,2-Tetrachloroethane	25.0	27.4		ug/L		109	70 - 130
1,1,1-Trichloroethane	25.0	27.4		ug/L		109	70 - 130
1,1,2,2-Tetrachloroethane	25.0	24.1		ug/L		96	70 - 130
1,1,2-Trichloroethane	25.0	25.0		ug/L		100	70 - 130
1,1-Dichloroethane	25.0	25.7		ug/L		103	70 - 130
1,1-Dichloroethene	25.0	26.9		ug/L		108	70 - 130
1,1-Dichloropropene	25.0	26.3		ug/L		105	70 - 130
1,2,3-Trichlorobenzene	25.0	25.4		ug/L		102	70 - 130
1,2,3-Trichloropropane	25.0	25.9		ug/L		104	70 - 130
1,2,4-Trichlorobenzene	25.0	25.5		ug/L		102	70 - 130
1,2,4-Trimethylbenzene	25.0	24.6		ug/L		98	70 - 130
1,2-Dibromo-3-Chloropropane	25.0	22.3		ug/L		89	70 - 130
1,2-Dichlorobenzene	25.0	24.9		ug/L		100	70 - 130
1,2-Dichloroethane	25.0	25.1		ug/L		100	70 - 130
1,2-Dichloropropane	25.0	25.6		ug/L		102	70 - 130
1,3,5-Trimethylbenzene	25.0	24.2		ug/L		97	70 - 130
1,3-Dichlorobenzene	25.0	25.0		ug/L		100	70 - 130
1,3-Dichloropropane	25.0	25.6		ug/L		103	70 - 130
1,4-Dichlorobenzene	25.0	24.6		ug/L		99	70 - 130
1,4-Dioxane	1000	1080		ug/L		108	70 - 130

Method: 8260C - Volatile Organic Compounds (GC/MS) (Continued)

Lab Sample ID: LCS 480-108686/4
Matrix: Water
Analysis Batch: 108686

Client Sample ID: Lab Control Sample
Prep Type: Total/NA

Analyte	Spike Added	LCS Result	LCS Qualifier	Unit	D	%Rec	%Rec. Limits
2,2-Dichloropropane	25.0	28.9		ug/L		115	70 - 130
2-Butanone (MEK)	125	148		ug/L		118	70 - 130
2-Chlorotoluene	25.0	26.0		ug/L		104	70 - 130
2-Hexanone	125	104		ug/L		83	70 - 130
4-Chlorotoluene	25.0	26.0		ug/L		104	70 - 130
4-Isopropyltoluene	25.0	24.7		ug/L		99	70 - 130
4-Methyl-2-pentanone (MIBK)	125	101		ug/L		81	70 - 130
Acetone	125	114		ug/L		91	70 - 130
Benzene	25.0	26.0		ug/L		104	70 - 130
Bromobenzene	25.0	24.8		ug/L		99	70 - 130
Bromoform	25.0	26.9		ug/L		107	70 - 130
Bromomethane	25.0	25.1		ug/L		101	70 - 130
Carbon disulfide	25.0	28.1		ug/L		112	70 - 130
Carbon tetrachloride	25.0	27.4		ug/L		110	70 - 130
Chlorobenzene	25.0	25.7		ug/L		103	70 - 130
Chlorobromomethane	25.0	28.4		ug/L		113	70 - 130
Chlorodibromomethane	25.0	26.2		ug/L		105	70 - 130
Chloroethane	25.0	24.3		ug/L		97	70 - 130
Chloroform	25.0	26.3		ug/L		105	70 - 130
Chloromethane	25.0	19.7		ug/L		79	70 - 130
cis-1,2-Dichloroethene	25.0	27.0		ug/L		108	70 - 130
cis-1,3-Dichloropropene	25.0	25.8		ug/L		103	70 - 130
Dichlorobromomethane	25.0	26.7		ug/L		107	70 - 130
Dichlorodifluoromethane	50.0	68.4	*	ug/L		137	70 - 130
Ethyl ether	25.0	24.7		ug/L		99	70 - 130
Ethylbenzene	25.0	25.2		ug/L		101	70 - 130
Ethylene Dibromide	25.0	25.9		ug/L		104	70 - 130
Hexachlorobutadiene	25.0	23.3		ug/L		93	70 - 130
Isopropyl ether	25.0	20.8		ug/L		83	70 - 130
Isopropylbenzene	25.0	24.5		ug/L		98	70 - 130
Methyl tert-butyl ether	25.0	29.2		ug/L		117	70 - 130
Methylene Chloride	25.0	25.8		ug/L		103	70 - 130
m-Xylene & p-Xylene	50.0	52.0		ug/L		104	70 - 130
Naphthalene	25.0	24.7		ug/L		99	70 - 130
n-Butylbenzene	25.0	24.0		ug/L		96	70 - 130
N-Propylbenzene	25.0	23.8		ug/L		95	70 - 130
o-Xylene	25.0	26.0		ug/L		104	70 - 130
sec-Butylbenzene	25.0	24.2		ug/L		97	70 - 130
Styrene	25.0	25.6		ug/L		102	70 - 130
Tert-amyl methyl ether	25.0	27.3		ug/L		109	70 - 130
Tert-butyl ethyl ether	25.0	24.3		ug/L		97	70 - 130
tert-Butylbenzene	25.0	25.1		ug/L		100	70 - 130
Tetrachloroethene	25.0	26.5		ug/L		106	70 - 130
Tetrahydrofuran	125	102		ug/L		82	70 - 130
Toluene	25.0	25.6		ug/L		102	70 - 130
trans-1,2-Dichloroethene	25.0	27.2		ug/L		109	70 - 130
trans-1,3-Dichloropropene	25.0	25.2		ug/L		101	70 - 130
Trichloroethene	25.0	26.9		ug/L		108	70 - 130

Method: 8260C - Volatile Organic Compounds (GC/MS) (Continued)

Lab Sample ID: LCS 480-108686/4
Matrix: Water
Analysis Batch: 108686

Client Sample ID: Lab Control Sample
Prep Type: Total/NA

Analyte	Spike Added	LCS Result	LCS Qualifier	Unit	D	%Rec	%Rec. Limits
Trichlorofluoromethane	25.0	28.6		ug/L		114	70 - 130
Vinyl chloride	25.0	24.8		ug/L		99	70 - 130
Dibromomethane	25.0	26.7		ug/L		107	70 - 130

Surrogate	*LCS %Recovery*	*LCS Qualifier*	*Limits*
Toluene-d8 (Surr)	*97*		*70 - 130*
1,2-Dichloroethane-d4 (Surr)	*100*		*70 - 130*
4-Bromofluorobenzene (Surr)	*109*		*70 - 130*

Lab Sample ID: LCSD 480-108686/5
Matrix: Water
Analysis Batch: 108686

Client Sample ID: Lab Control Sample Dup
Prep Type: Total/NA

Analyte	Spike Added	LCSD Result	LCSD Qualifier	Unit	D	%Rec	%Rec. Limits	RPD	RPD Limit
1,1,1,2-Tetrachloroethane	25.0	26.2		ug/L		105	70 - 130	4	20
1,1,1-Trichloroethane	25.0	26.0		ug/L		104	70 - 130	5	20
1,1,2,2-Tetrachloroethane	25.0	24.1		ug/L		97	70 - 130	0	20
1,1,2-Trichloroethane	25.0	24.7		ug/L		99	70 - 130	1	20
1,1-Dichloroethane	25.0	24.5		ug/L		98	70 - 130	5	20
1,1-Dichloroethene	25.0	25.6		ug/L		102	70 - 130	5	20
1,1-Dichloropropene	25.0	25.5		ug/L		102	70 - 130	3	20
1,2,3-Trichlorobenzene	25.0	25.2		ug/L		101	70 - 130	1	20
1,2,3-Trichloropropane	25.0	25.7		ug/L		103	70 - 130	1	20
1,2,4-Trichlorobenzene	25.0	25.2		ug/L		101	70 - 130	1	20
1,2,4-Trimethylbenzene	25.0	23.6		ug/L		94	70 - 130	4	20
1,2-Dibromo-3-Chloropropane	25.0	23.5		ug/L		94	70 - 130	5	20
1,2-Dichlorobenzene	25.0	24.5		ug/L		98	70 - 130	2	20
1,2-Dichloroethane	25.0	24.6		ug/L		98	70 - 130	2	20
1,2-Dichloropropane	25.0	23.9		ug/L		95	70 - 130	7	20
1,3,5-Trimethylbenzene	25.0	23.4		ug/L		94	70 - 130	4	20
1,3-Dichlorobenzene	25.0	24.5		ug/L		98	70 - 130	2	20
1,3-Dichloropropane	25.0	24.8		ug/L		99	70 - 130	4	20
1,4-Dichlorobenzene	25.0	24.5		ug/L		98	70 - 130	1	20
1,4-Dioxane	1000	1110		ug/L		111	70 - 130	2	20
2,2-Dichloropropane	25.0	27.0		ug/L		108	70 - 130	7	20
2-Butanone (MEK)	125	148		ug/L		119	70 - 130	0	20
2-Chlorotoluene	25.0	25.4		ug/L		101	70 - 130	3	20
2-Hexanone	125	102		ug/L		82	70 - 130	2	20
4-Chlorotoluene	25.0	25.4		ug/L		101	70 - 130	3	20
4-Isopropyltoluene	25.0	23.6		ug/L		95	70 - 130	4	20
4-Methyl-2-pentanone (MIBK)	125	98.2		ug/L		79	70 - 130	3	20
Acetone	125	111		ug/L		89	70 - 130	2	20
Benzene	25.0	24.6		ug/L		98	70 - 130	5	20
Bromobenzene	25.0	24.3		ug/L		97	70 - 130	2	20
Bromoform	25.0	26.5		ug/L		106	70 - 130	1	20
Bromomethane	25.0	23.1		ug/L		92	70 - 130	9	20
Carbon disulfide	25.0	27.7		ug/L		111	70 - 130	2	20
Carbon tetrachloride	25.0	25.9		ug/L		104	70 - 130	6	20

Method: 8260C - Volatile Organic Compounds (GC/MS) (Continued)

Lab Sample ID: LCSD 480-108686/5
Matrix: Water
Analysis Batch: 108686

Client Sample ID: Lab Control Sample Dup
Prep Type: Total/NA

Analyte	Spike Added	LCSD Result	LCSD Qualifier	Unit	D	%Rec	%Rec. Limits	RPD	RPD Limit
Chlorobenzene	25.0	24.6		ug/L		99	70 - 130	4	20
Chlorobromomethane	25.0	27.2		ug/L		109	70 - 130	4	20
Chlorodibromomethane	25.0	26.0		ug/L		104	70 - 130	1	20
Chloroethane	25.0	22.7		ug/L		91	70 - 130	7	20
Chloroform	25.0	24.9		ug/L		99	70 - 130	6	20
Chloromethane	25.0	18.5		ug/L		74	70 - 130	7	20
cis-1,2-Dichloroethene	25.0	25.5		ug/L		102	70 - 130	6	20
cis-1,3-Dichloropropene	25.0	25.4		ug/L		101	70 - 130	2	20
Dichlorobromomethane	25.0	25.8		ug/L		103	70 - 130	4	20
Dichlorodifluoromethane	50.0	62.4		ug/L		125	70 - 130	9	20
Ethyl ether	25.0	23.7		ug/L		95	70 - 130	4	20
Ethylbenzene	25.0	24.1		ug/L		97	70 - 130	4	20
Ethylene Dibromide	25.0	25.9		ug/L		104	70 - 130	0	20
Hexachlorobutadiene	25.0	22.6		ug/L		90	70 - 130	3	20
Isopropyl ether	25.0	20.0		ug/L		80	70 - 130	4	20
Isopropylbenzene	25.0	23.6		ug/L		95	70 - 130	3	20
Methyl tert-butyl ether	25.0	28.7		ug/L		115	70 - 130	2	20
Methylene Chloride	25.0	25.2		ug/L		101	70 - 130	2	20
m-Xylene & p-Xylene	50.0	49.6		ug/L		99	70 - 130	5	20
Naphthalene	25.0	24.7		ug/L		99	70 - 130	0	20
n-Butylbenzene	25.0	22.8		ug/L		91	70 - 130	5	20
N-Propylbenzene	25.0	22.8		ug/L		91	70 - 130	4	20
o-Xylene	25.0	24.5		ug/L		98	70 - 130	6	20
sec-Butylbenzene	25.0	23.1		ug/L		92	70 - 130	4	20
Styrene	25.0	24.7		ug/L		99	70 - 130	4	20
Tert-amyl methyl ether	25.0	26.6		ug/L		106	70 - 130	2	20
Tert-butyl ethyl ether	25.0	23.6		ug/L		94	70 - 130	3	20
tert-Butylbenzene	25.0	24.1		ug/L		96	70 - 130	4	20
Tetrachloroethene	25.0	24.7		ug/L		99	70 - 130	7	20
Tetrahydrofuran	125	103		ug/L		83	70 - 130	1	20
Toluene	25.0	24.4		ug/L		97	70 - 130	5	20
trans-1,2-Dichloroethene	25.0	25.9		ug/L		104	70 - 130	5	20
trans-1,3-Dichloropropene	25.0	24.5		ug/L		98	70 - 130	3	20
Trichloroethene	25.0	25.9		ug/L		103	70 - 130	4	20
Trichlorofluoromethane	25.0	27.0		ug/L		108	70 - 130	6	20
Vinyl chloride	25.0	23.0		ug/L		92	70 - 130	8	20
Dibromomethane	25.0	26.4		ug/L		106	70 - 130	1	20

Surrogate	*LCSD %Recovery*	*LCSD Qualifier*	*Limits*
Toluene-d8 (Surr)	*96*		*70 - 130*
1,2-Dichloroethane-d4 (Surr)	*99*		*70 - 130*
4-Bromofluorobenzene (Surr)	*105*		*70 - 130*

Method: 8260C - Volatile Organic Compounds (GC/MS) (Continued)

Lab Sample ID: 480-34808-7 MS
Matrix: Water
Analysis Batch: 108686

Client Sample ID: MW1025D-20130321-01
Prep Type: Total/NA

Analyte	Sample Result	Sample Qualifier	Spike Added	MS Result	MS Qualifier	Unit	D	%Rec	%Rec. Limits
1,1,1,2-Tetrachloroethane	ND		25.0	27.5		ug/L		110	70 - 130
1,1,1-Trichloroethane	ND		25.0	30.0		ug/L		120	70 - 130
1,1,2,2-Tetrachloroethane	ND		25.0	24.0		ug/L		96	70 - 130
1,1,2-Trichloroethane	ND		25.0	25.6		ug/L		102	70 - 130
1,1-Dichloroethane	ND		25.0	27.0		ug/L		108	70 - 130
1,1-Dichloroethene	ND		25.0	29.2		ug/L		117	70 - 130
1,1-Dichloropropene	ND		25.0	28.4		ug/L		114	70 - 130
1,2,3-Trichlorobenzene	ND		25.0	24.8		ug/L		99	70 - 130
1,2,3-Trichloropropane	ND		25.0	26.1		ug/L		104	70 - 130
1,2,4-Trichlorobenzene	ND		25.0	24.7		ug/L		99	70 - 130
1,2,4-Trimethylbenzene	ND		25.0	24.5		ug/L		98	70 - 130
1,2-Dibromo-3-Chloropropane	ND		25.0	23.0		ug/L		92	70 - 130
1,2-Dichlorobenzene	ND		25.0	25.1		ug/L		100	70 - 130
1,2-Dichloroethane	ND		25.0	26.4		ug/L		106	70 - 130
1,2-Dichloropropane	ND		25.0	25.6		ug/L		102	70 - 130
1,3,5-Trimethylbenzene	ND		25.0	24.2		ug/L		97	70 - 130
1,3-Dichlorobenzene	ND		25.0	24.9		ug/L		100	70 - 130
1,3-Dichloropropane	ND		25.0	25.8		ug/L		103	70 - 130
1,4-Dichlorobenzene	ND		25.0	24.5		ug/L		98	70 - 130
1,4-Dioxane	ND		1000	1070		ug/L		107	70 - 130
2,2-Dichloropropane	ND		25.0	27.1		ug/L		108	70 - 130
2-Butanone (MEK)	ND		125	149		ug/L		119	70 - 130
2-Chlorotoluene	ND		25.0	27.0		ug/L		108	70 - 130
2-Hexanone	ND		125	110		ug/L		88	70 - 130
4-Chlorotoluene	ND		25.0	26.4		ug/L		106	70 - 130
4-Isopropyltoluene	ND		25.0	25.2		ug/L		101	70 - 130
4-Methyl-2-pentanone (MIBK)	ND		125	106		ug/L		85	70 - 130
Acetone	ND		125	115		ug/L		92	70 - 130
Benzene	ND		25.0	26.6		ug/L		106	70 - 130
Bromobenzene	ND		25.0	24.9		ug/L		99	70 - 130
Bromoform	ND		25.0	27.6		ug/L		111	70 - 130
Bromomethane	ND		25.0	26.1		ug/L		105	70 - 130
Carbon disulfide	ND		25.0	30.9		ug/L		124	70 - 130
Carbon tetrachloride	ND		25.0	30.9		ug/L		124	70 - 130
Chlorobenzene	ND		25.0	26.5		ug/L		106	70 - 130
Chlorobromomethane	ND		25.0	28.2		ug/L		113	70 - 130
Chlorodibromomethane	ND		25.0	27.1		ug/L		108	70 - 130
Chloroethane	ND		25.0	25.7		ug/L		103	70 - 130
Chloroform	ND		25.0	27.1		ug/L		108	70 - 130
Chloromethane	ND		25.0	21.1		ug/L		84	70 - 130
cis-1,2-Dichloroethene	17		25.0	44.5		ug/L		109	70 - 130
cis-1,3-Dichloropropene	ND		25.0	25.5		ug/L		102	70 - 130
Dichlorobromomethane	ND		25.0	26.9		ug/L		108	70 - 130
Dichlorodifluoromethane	ND	*	50.0	78.5	F	ug/L		157	70 - 130
Ethyl ether	ND		25.0	25.2		ug/L		101	70 - 130
Ethylbenzene	ND		25.0	26.5		ug/L		106	70 - 130
Ethylene Dibromide	ND		25.0	26.7		ug/L		107	70 - 130
Hexachlorobutadiene	ND		25.0	23.2		ug/L		93	70 - 130

Method: 8260C - Volatile Organic Compounds (GC/MS) (Continued)

Lab Sample ID: 480-34808-7 MS — **Client Sample ID: MW1025D-20130321-01**
Matrix: Water — **Prep Type: Total/NA**
Analysis Batch: 108686

Analyte	Sample Result	Sample Qualifier	Spike Added	MS Result	MS Qualifier	Unit	D	%Rec	%Rec. Limits
Isopropyl ether	ND		25.0	21.6		ug/L		86	70 - 130
Isopropylbenzene	ND		25.0	25.0		ug/L		100	70 - 130
Methyl tert-butyl ether	ND		25.0	29.7		ug/L		119	70 - 130
Methylene Chloride	ND		25.0	26.4		ug/L		106	70 - 130
m-Xylene & p-Xylene	ND		50.0	53.2		ug/L		106	70 - 130
Naphthalene	ND		25.0	24.5		ug/L		98	70 - 130
n-Butylbenzene	ND		25.0	23.9		ug/L		96	70 - 130
N-Propylbenzene	ND		25.0	24.1		ug/L		96	70 - 130
o-Xylene	ND		25.0	26.4		ug/L		106	70 - 130
sec-Butylbenzene	ND		25.0	24.8		ug/L		99	70 - 130
Styrene	ND		25.0	26.2		ug/L		105	70 - 130
Tert-amyl methyl ether	ND		25.0	28.0		ug/L		112	70 - 130
Tert-butyl ethyl ether	ND		25.0	25.6		ug/L		102	70 - 130
tert-Butylbenzene	ND		25.0	25.7		ug/L		103	70 - 130
Tetrachloroethene	ND		25.0	26.8		ug/L		107	70 - 130
Tetrahydrofuran	ND		125	110		ug/L		88	70 - 130
Toluene	ND		25.0	26.2		ug/L		105	70 - 130
trans-1,2-Dichloroethene	ND		25.0	29.2		ug/L		117	70 - 130
trans-1,3-Dichloropropene	ND		25.0	24.9		ug/L		100	70 - 130
Trichloroethene	110		25.0	136	E 4	ug/L		97	70 - 130
Trichlorofluoromethane	ND		25.0	33.0	F	ug/L		132	70 - 130
Vinyl chloride	ND		25.0	27.6		ug/L		110	70 - 130
Dibromomethane	ND		25.0	27.1		ug/L		108	70 - 130

Surrogate	*MS %Recovery*	*MS Qualifier*	*Limits*
Toluene-d8 (Surr)	*98*		*70 - 130*
1,2-Dichloroethane-d4 (Surr)	*102*		*70 - 130*
4-Bromofluorobenzene (Surr)	*113*		*70 - 130*

Lab Sample ID: 480-34808-7 MSD — **Client Sample ID: MW1025D-20130321-01**
Matrix: Water — **Prep Type: Total/NA**
Analysis Batch: 108686

Analyte	Sample Result	Sample Qualifier	Spike Added	MSD Result	MSD Qualifier	Unit	D	%Rec	%Rec. Limits	RPD	RPD Limit
1,1,1,2-Tetrachloroethane	ND		25.0	29.6		ug/L		118	70 - 130	7	20
1,1,1-Trichloroethane	ND		25.0	31.6		ug/L		126	70 - 130	5	20
1,1,2,2-Tetrachloroethane	ND		25.0	25.2		ug/L		101	70 - 130	5	20
1,1,2-Trichloroethane	ND		25.0	27.0		ug/L		108	70 - 130	5	20
1,1-Dichloroethane	ND		25.0	28.8		ug/L		115	70 - 130	6	20
1,1-Dichloroethene	ND		25.0	31.3		ug/L		125	70 - 130	7	20
1,1-Dichloropropene	ND		25.0	30.2		ug/L		121	70 - 130	6	20
1,2,3-Trichlorobenzene	ND		25.0	26.7		ug/L		107	70 - 130	7	20
1,2,3-Trichloropropane	ND		25.0	27.0		ug/L		108	70 - 130	3	20
1,2,4-Trichlorobenzene	ND		25.0	26.4		ug/L		106	70 - 130	6	20
1,2,4-Trimethylbenzene	ND		25.0	26.3		ug/L		105	70 - 130	7	20
1,2-Dibromo-3-Chloropropane	ND		25.0	24.1		ug/L		96	70 - 130	5	20
1,2-Dichlorobenzene	ND		25.0	26.9		ug/L		108	70 - 130	7	20
1,2-Dichloroethane	ND		25.0	27.3		ug/L		109	70 - 130	3	20

Method: 8260C - Volatile Organic Compounds (GC/MS) (Continued)

Lab Sample ID: 480-34808-7 MSD
Matrix: Water
Analysis Batch: 108686

Client Sample ID: MW1025D-20130321-01
Prep Type: Total/NA

Analyte	Sample Result	Sample Qualifier	Spike Added	MSD Result	MSD Qualifier	Unit	D	%Rec	%Rec. Limits	RPD	RPD Limit
1,2-Dichloropropane	ND		25.0	27.3		ug/L		109	70 - 130	7	20
1,3,5-Trimethylbenzene	ND		25.0	25.9		ug/L		104	70 - 130	7	20
1,3-Dichlorobenzene	ND		25.0	26.8		ug/L		107	70 - 130	7	20
1,3-Dichloropropane	ND		25.0	27.3		ug/L		109	70 - 130	6	20
1,4-Dichlorobenzene	ND		25.0	26.7		ug/L		107	70 - 130	9	20
1,4-Dioxane	ND		1000	1130		ug/L		113	70 - 130	5	20
2,2-Dichloropropane	ND		25.0	28.3		ug/L		113	70 - 130	4	20
2-Butanone (MEK)	ND		125	145		ug/L		116	70 - 130	3	20
2-Chlorotoluene	ND		25.0	28.5		ug/L		114	70 - 130	5	20
2-Hexanone	ND		125	104		ug/L		83	70 - 130	6	20
4-Chlorotoluene	ND		25.0	27.9		ug/L		112	70 - 130	5	20
4-Isopropyltoluene	ND		25.0	26.8		ug/L		107	70 - 130	6	20
4-Methyl-2-pentanone (MIBK)	ND		125	102		ug/L		81	70 - 130	4	20
Acetone	ND		125	112		ug/L		90	70 - 130	3	20
Benzene	ND		25.0	28.3		ug/L		113	70 - 130	6	20
Bromobenzene	ND		25.0	26.9		ug/L		108	70 - 130	8	20
Bromoform	ND		25.0	29.8		ug/L		119	70 - 130	8	20
Bromomethane	ND		25.0	28.3		ug/L		113	70 - 130	8	20
Carbon disulfide	ND		25.0	30.1		ug/L		121	70 - 130	3	20
Carbon tetrachloride	ND		25.0	32.4		ug/L		130	70 - 130	5	20
Chlorobenzene	ND		25.0	28.0		ug/L		112	70 - 130	6	20
Chlorobromomethane	ND		25.0	29.7		ug/L		119	70 - 130	5	20
Chlorodibromomethane	ND		25.0	29.1		ug/L		116	70 - 130	7	20
Chloroethane	ND		25.0	27.5		ug/L		110	70 - 130	7	20
Chloroform	ND		25.0	28.6		ug/L		114	70 - 130	5	20
Chloromethane	ND		25.0	22.4		ug/L		90	70 - 130	6	20
cis-1,2-Dichloroethene	17		25.0	47.5		ug/L		121	70 - 130	6	20
cis-1,3-Dichloropropene	ND		25.0	27.2		ug/L		109	70 - 130	6	20
Dichlorobromomethane	ND		25.0	29.1		ug/L		116	70 - 130	8	20
Dichlorodifluoromethane	ND	*	50.0	81.7	F	ug/L		163	70 - 130	4	20
Ethyl ether	ND		25.0	26.1		ug/L		105	70 - 130	4	20
Ethylbenzene	ND		25.0	27.7		ug/L		111	70 - 130	5	20
Ethylene Dibromide	ND		25.0	28.0		ug/L		112	70 - 130	5	20
Hexachlorobutadiene	ND		25.0	25.1		ug/L		100	70 - 130	8	20
Isopropyl ether	ND		25.0	22.3		ug/L		89	70 - 130	3	20
Isopropylbenzene	ND		25.0	26.9		ug/L		108	70 - 130	7	20
Methyl tert-butyl ether	ND		25.0	28.8		ug/L		115	70 - 130	3	20
Methylene Chloride	ND		25.0	28.1		ug/L		112	70 - 130	6	20
m-Xylene & p-Xylene	ND		50.0	56.5		ug/L		113	70 - 130	6	20
Naphthalene	ND		25.0	26.1		ug/L		104	70 - 130	6	20
n-Butylbenzene	ND		25.0	25.5		ug/L		102	70 - 130	7	20
N-Propylbenzene	ND		25.0	25.6		ug/L		102	70 - 130	6	20
o-Xylene	ND		25.0	27.9		ug/L		112	70 - 130	5	20
sec-Butylbenzene	ND		25.0	26.7		ug/L		107	70 - 130	7	20
Styrene	ND		25.0	27.6		ug/L		110	70 - 130	5	20
Tert-amyl methyl ether	ND		25.0	27.9		ug/L		112	70 - 130	0	20
Tert-butyl ethyl ether	ND		25.0	25.5		ug/L		102	70 - 130	0	20
tert-Butylbenzene	ND		25.0	27.4		ug/L		110	70 - 130	6	20

Method: 8260C - Volatile Organic Compounds (GC/MS) (Continued)

Lab Sample ID: 480-34808-7 MSD — **Client Sample ID: MW1025D-20130321-01**
Matrix: Water — **Prep Type: Total/NA**
Analysis Batch: 108686

Analyte	Sample Result	Sample Qualifier	Spike Added	MSD Result	MSD Qualifier	Unit	D	%Rec	%Rec. Limits	RPD	RPD Limit
Tetrachloroethene	ND		25.0	28.2		ug/L		113	70 - 130	5	20
Tetrahydrofuran	ND		125	104		ug/L		83	70 - 130	6	20
Toluene	ND		25.0	28.0		ug/L		112	70 - 130	7	20
trans-1,2-Dichloroethene	ND		25.0	30.4		ug/L		122	70 - 130	4	20
trans-1,3-Dichloropropene	ND		25.0	26.8		ug/L		107	70 - 130	7	20
Trichloroethene	110		25.0	141	E 4	ug/L		120	70 - 130	4	20
Trichlorofluoromethane	ND		25.0	34.8	F	ug/L		139	70 - 130	5	20
Vinyl chloride	ND		25.0	28.8		ug/L		115	70 - 130	4	20
Dibromomethane	ND		25.0	28.5		ug/L		114	70 - 130	5	20

Surrogate	*MSD %Recovery*	*MSD Qualifier*	*Limits*
Toluene-d8 (Surr)	*99*		*70 - 130*
1,2-Dichloroethane-d4 (Surr)	*99*		*70 - 130*
4-Bromofluorobenzene (Surr)	*112*		*70 - 130*

Lab Sample ID: MB 480-108960/7 — **Client Sample ID: Method Blank**
Matrix: Water — **Prep Type: Total/NA**
Analysis Batch: 108960

Analyte	MB Result	MB Qualifier	RL	MDL	Unit	D	Prepared	Analyzed	Dil Fac
1,1,1,2-Tetrachloroethane	ND		1.0		ug/L			03/25/13 12:18	1
1,1,1-Trichloroethane	ND		1.0		ug/L			03/25/13 12:18	1
1,1,2,2-Tetrachloroethane	ND		0.50		ug/L			03/25/13 12:18	1
1,1,2-Trichloroethane	ND		1.0		ug/L			03/25/13 12:18	1
1,1-Dichloroethane	ND		1.0		ug/L			03/25/13 12:18	1
1,1-Dichloroethene	ND		1.0		ug/L			03/25/13 12:18	1
1,1-Dichloropropene	ND		1.0		ug/L			03/25/13 12:18	1
1,2,3-Trichlorobenzene	ND		1.0		ug/L			03/25/13 12:18	1
1,2,3-Trichloropropane	ND		1.0		ug/L			03/25/13 12:18	1
1,2,4-Trichlorobenzene	ND		1.0		ug/L			03/25/13 12:18	1
1,2,4-Trimethylbenzene	ND		1.0		ug/L			03/25/13 12:18	1
1,2-Dibromo-3-Chloropropane	ND		5.0		ug/L			03/25/13 12:18	1
1,2-Dichlorobenzene	ND		1.0		ug/L			03/25/13 12:18	1
1,2-Dichloroethane	ND		1.0		ug/L			03/25/13 12:18	1
1,2-Dichloropropane	ND		1.0		ug/L			03/25/13 12:18	1
1,3,5-Trimethylbenzene	ND		1.0		ug/L			03/25/13 12:18	1
1,3-Dichlorobenzene	ND		1.0		ug/L			03/25/13 12:18	1
1,3-Dichloropropane	ND		1.0		ug/L			03/25/13 12:18	1
1,4-Dichlorobenzene	ND		1.0		ug/L			03/25/13 12:18	1
1,4-Dioxane	ND		50		ug/L			03/25/13 12:18	1
2,2-Dichloropropane	ND		1.0		ug/L			03/25/13 12:18	1
2-Butanone (MEK)	ND		10		ug/L			03/25/13 12:18	1
2-Chlorotoluene	ND		1.0		ug/L			03/25/13 12:18	1
2-Hexanone	ND		10		ug/L			03/25/13 12:18	1
4-Chlorotoluene	ND		1.0		ug/L			03/25/13 12:18	1
4-Isopropyltoluene	ND		1.0		ug/L			03/25/13 12:18	1
4-Methyl-2-pentanone (MIBK)	ND		10		ug/L			03/25/13 12:18	1
Acetone	ND		50		ug/L			03/25/13 12:18	1

Method: 8260C - Volatile Organic Compounds (GC/MS) (Continued)

Lab Sample ID: MB 480-108960/7
Matrix: Water
Analysis Batch: 108960

Client Sample ID: Method Blank
Prep Type: Total/NA

Analyte	MB Result	MB Qualifier	RL	MDL	Unit	D	Prepared	Analyzed	Dil Fac
Benzene	ND		1.0		ug/L			03/25/13 12:18	1
Bromobenzene	ND		1.0		ug/L			03/25/13 12:18	1
Bromoform	ND		1.0		ug/L			03/25/13 12:18	1
Bromomethane	ND		2.0		ug/L			03/25/13 12:18	1
Carbon disulfide	ND		10		ug/L			03/25/13 12:18	1
Carbon tetrachloride	ND		1.0		ug/L			03/25/13 12:18	1
Chlorobenzene	ND		1.0		ug/L			03/25/13 12:18	1
Chlorobromomethane	ND		1.0		ug/L			03/25/13 12:18	1
Chlorodibromomethane	ND		0.50		ug/L			03/25/13 12:18	1
Chloroethane	ND		2.0		ug/L			03/25/13 12:18	1
Chloroform	ND		1.0		ug/L			03/25/13 12:18	1
Chloromethane	ND		2.0		ug/L			03/25/13 12:18	1
cis-1,2-Dichloroethene	ND		1.0		ug/L			03/25/13 12:18	1
cis-1,3-Dichloropropene	ND		0.40		ug/L			03/25/13 12:18	1
Dichlorobromomethane	ND		0.50		ug/L			03/25/13 12:18	1
Dichlorodifluoromethane	ND		1.0		ug/L			03/25/13 12:18	1
Ethyl ether	ND		1.0		ug/L			03/25/13 12:18	1
Ethylbenzene	ND		1.0		ug/L			03/25/13 12:18	1
Ethylene Dibromide	ND		1.0		ug/L			03/25/13 12:18	1
Hexachlorobutadiene	ND		0.40		ug/L			03/25/13 12:18	1
Isopropyl ether	ND		10		ug/L			03/25/13 12:18	1
Isopropylbenzene	ND		1.0		ug/L			03/25/13 12:18	1
Methyl tert-butyl ether	ND		1.0		ug/L			03/25/13 12:18	1
Methylene Chloride	ND		1.0		ug/L			03/25/13 12:18	1
m-Xylene & p-Xylene	ND		2.0		ug/L			03/25/13 12:18	1
Naphthalene	ND		5.0		ug/L			03/25/13 12:18	1
n-Butylbenzene	ND		1.0		ug/L			03/25/13 12:18	1
N-Propylbenzene	ND		1.0		ug/L			03/25/13 12:18	1
o-Xylene	ND		1.0		ug/L			03/25/13 12:18	1
sec-Butylbenzene	ND		1.0		ug/L			03/25/13 12:18	1
Styrene	ND		1.0		ug/L			03/25/13 12:18	1
Tert-amyl methyl ether	ND		5.0		ug/L			03/25/13 12:18	1
Tert-butyl ethyl ether	ND		5.0		ug/L			03/25/13 12:18	1
tert-Butylbenzene	ND		1.0		ug/L			03/25/13 12:18	1
Tetrachloroethene	ND		1.0		ug/L			03/25/13 12:18	1
Tetrahydrofuran	ND		10		ug/L			03/25/13 12:18	1
Toluene	ND		1.0		ug/L			03/25/13 12:18	1
trans-1,2-Dichloroethene	ND		1.0		ug/L			03/25/13 12:18	1
trans-1,3-Dichloropropene	ND		0.40		ug/L			03/25/13 12:18	1
Trichloroethene	ND		1.0		ug/L			03/25/13 12:18	1
Trichlorofluoromethane	ND		1.0		ug/L			03/25/13 12:18	1
Vinyl chloride	ND		0.50		ug/L			03/25/13 12:18	1
Dibromomethane	ND		1.0		ug/L			03/25/13 12:18	1

Surrogate	*MB %Recovery*	*MB Qualifier*	*Limits*	*Prepared*	*Analyzed*	*Dil Fac*
Toluene-d8 (Surr)	*95*		*70 - 130*		*03/25/13 12:18*	*1*
1,2-Dichloroethane-d4 (Surr)	*94*		*70 - 130*		*03/25/13 12:18*	*1*
4-Bromofluorobenzene (Surr)	*110*		*70 - 130*		*03/25/13 12:18*	*1*

Method: 8260C - Volatile Organic Compounds (GC/MS) (Continued)

Lab Sample ID: LCS 480-108960/4
Matrix: Water
Analysis Batch: 108960

Client Sample ID: Lab Control Sample
Prep Type: Total/NA

Analyte	Spike Added	LCS Result	LCS Qualifier	Unit	D	%Rec	%Rec. Limits
1,1,1,2-Tetrachloroethane	25.0	25.3		ug/L		101	70 - 130
1,1,1-Trichloroethane	25.0	26.6		ug/L		106	70 - 130
1,1,2,2-Tetrachloroethane	25.0	21.6		ug/L		86	70 - 130
1,1,2-Trichloroethane	25.0	23.2		ug/L		93	70 - 130
1,1-Dichloroethane	25.0	23.7		ug/L		95	70 - 130
1,1-Dichloroethene	25.0	26.3		ug/L		105	70 - 130
1,1-Dichloropropene	25.0	25.4		ug/L		101	70 - 130
1,2,3-Trichlorobenzene	25.0	22.9		ug/L		92	70 - 130
1,2,3-Trichloropropane	25.0	23.1		ug/L		92	70 - 130
1,2,4-Trichlorobenzene	25.0	23.0		ug/L		92	70 - 130
1,2,4-Trimethylbenzene	25.0	22.1		ug/L		89	70 - 130
1,2-Dibromo-3-Chloropropane	25.0	21.3		ug/L		85	70 - 130
1,2-Dichlorobenzene	25.0	22.6		ug/L		90	70 - 130
1,2-Dichloroethane	25.0	23.2		ug/L		93	70 - 130
1,2-Dichloropropane	25.0	23.4		ug/L		94	70 - 130
1,3,5-Trimethylbenzene	25.0	21.8		ug/L		87	70 - 130
1,3-Dichlorobenzene	25.0	22.4		ug/L		90	70 - 130
1,3-Dichloropropane	25.0	23.1		ug/L		92	70 - 130
1,4-Dichlorobenzene	25.0	22.1		ug/L		89	70 - 130
1,4-Dioxane	1000	1090		ug/L		109	70 - 130
2,2-Dichloropropane	25.0	27.2		ug/L		109	70 - 130
2-Butanone (MEK)	125	139		ug/L		111	70 - 130
2-Chlorotoluene	25.0	24.1		ug/L		97	70 - 130
2-Hexanone	125	94.2		ug/L		75	70 - 130
4-Chlorotoluene	25.0	23.4		ug/L		94	70 - 130
4-Isopropyltoluene	25.0	22.6		ug/L		90	70 - 130
4-Methyl-2-pentanone (MIBK)	125	92.9		ug/L		74	70 - 130
Acetone	125	102		ug/L		81	70 - 130
Benzene	25.0	24.2		ug/L		97	70 - 130
Bromobenzene	25.0	22.7		ug/L		91	70 - 130
Bromoform	25.0	26.3		ug/L		105	70 - 130
Bromomethane	25.0	23.7		ug/L		95	70 - 130
Carbon disulfide	25.0	23.7		ug/L		95	70 - 130
Carbon tetrachloride	25.0	27.3		ug/L		109	70 - 130
Chlorobenzene	25.0	23.7		ug/L		95	70 - 130
Chlorobromomethane	25.0	26.1		ug/L		105	70 - 130
Chlorodibromomethane	25.0	24.8		ug/L		99	70 - 130
Chloroethane	25.0	23.8		ug/L		95	70 - 130
Chloroform	25.0	24.7		ug/L		99	70 - 130
Chloromethane	25.0	16.7	*	ug/L		67	70 - 130
cis-1,2-Dichloroethene	25.0	25.3		ug/L		101	70 - 130
cis-1,3-Dichloropropene	25.0	24.0		ug/L		96	70 - 130
Dichlorobromomethane	25.0	25.3		ug/L		101	70 - 130
Dichlorodifluoromethane	50.0	63.4		ug/L		127	70 - 130
Ethyl ether	25.0	24.1		ug/L		96	70 - 130
Ethylbenzene	25.0	23.5		ug/L		94	70 - 130
Ethylene Dibromide	25.0	24.4		ug/L		98	70 - 130
Hexachlorobutadiene	25.0	21.8		ug/L		87	70 - 130

Method: 8260C - Volatile Organic Compounds (GC/MS) (Continued)

Lab Sample ID: LCS 480-108960/4
Matrix: Water
Analysis Batch: 108960

Client Sample ID: Lab Control Sample
Prep Type: Total/NA

Analyte	Spike Added	LCS Result	LCS Qualifier	Unit	D	%Rec	%Rec. Limits
Isopropyl ether	25.0	19.9		ug/L		80	70 - 130
Isopropylbenzene	25.0	22.5		ug/L		90	70 - 130
Methyl tert-butyl ether	25.0	27.8		ug/L		111	70 - 130
Methylene Chloride	25.0	24.1		ug/L		97	70 - 130
m-Xylene & p-Xylene	50.0	48.1		ug/L		96	70 - 130
Naphthalene	25.0	22.5		ug/L		90	70 - 130
n-Butylbenzene	25.0	21.7		ug/L		87	70 - 130
N-Propylbenzene	25.0	21.8		ug/L		87	70 - 130
o-Xylene	25.0	24.0		ug/L		96	70 - 130
sec-Butylbenzene	25.0	22.0		ug/L		88	70 - 130
Styrene	25.0	23.4		ug/L		94	70 - 130
Tert-amyl methyl ether	25.0	25.9		ug/L		103	70 - 130
Tert-butyl ethyl ether	25.0	22.8		ug/L		91	70 - 130
tert-Butylbenzene	25.0	22.8		ug/L		91	70 - 130
Tetrachloroethene	25.0	24.8		ug/L		99	70 - 130
Tetrahydrofuran	125	97.9		ug/L		78	70 - 130
Toluene	25.0	23.7		ug/L		95	70 - 130
trans-1,2-Dichloroethene	25.0	25.6		ug/L		102	70 - 130
trans-1,3-Dichloropropene	25.0	23.3		ug/L		93	70 - 130
Trichloroethene	25.0	25.6		ug/L		102	70 - 130
Trichlorofluoromethane	25.0	28.3		ug/L		113	70 - 130
Vinyl chloride	25.0	22.5		ug/L		90	70 - 130
Dibromomethane	25.0	25.0		ug/L		100	70 - 130

Surrogate	*LCS %Recovery*	*LCS Qualifier*	*Limits*
Toluene-d8 (Surr)	*94*		*70 - 130*
1,2-Dichloroethane-d4 (Surr)	*93*		*70 - 130*
4-Bromofluorobenzene (Surr)	*111*		*70 - 130*

Lab Sample ID: LCSD 480-108960/5
Matrix: Water
Analysis Batch: 108960

Client Sample ID: Lab Control Sample Dup
Prep Type: Total/NA

Analyte	Spike Added	LCSD Result	LCSD Qualifier	Unit	D	%Rec	%Rec. Limits	RPD	RPD Limit
1,1,1,2-Tetrachloroethane	25.0	26.0		ug/L		104	70 - 130	3	20
1,1,1-Trichloroethane	25.0	26.4		ug/L		106	70 - 130	1	20
1,1,2,2-Tetrachloroethane	25.0	22.4		ug/L		90	70 - 130	4	20
1,1,2-Trichloroethane	25.0	23.7		ug/L		95	70 - 130	2	20
1,1-Dichloroethane	25.0	23.7		ug/L		95	70 - 130	0	20
1,1-Dichloroethene	25.0	24.8		ug/L		99	70 - 130	6	20
1,1-Dichloropropene	25.0	25.3		ug/L		101	70 - 130	0	20
1,2,3-Trichlorobenzene	25.0	23.6		ug/L		94	70 - 130	3	20
1,2,3-Trichloropropane	25.0	24.4		ug/L		98	70 - 130	6	20
1,2,4-Trichlorobenzene	25.0	24.0		ug/L		96	70 - 130	4	20
1,2,4-Trimethylbenzene	25.0	22.7		ug/L		91	70 - 130	2	20
1,2-Dibromo-3-Chloropropane	25.0	22.0		ug/L		88	70 - 130	3	20
1,2-Dichlorobenzene	25.0	23.3		ug/L		93	70 - 130	3	20
1,2-Dichloroethane	25.0	24.1		ug/L		97	70 - 130	4	20

Method: 8260C - Volatile Organic Compounds (GC/MS) (Continued)

Lab Sample ID: LCSD 480-108960/5
Matrix: Water
Analysis Batch: 108960

Client Sample ID: Lab Control Sample Dup
Prep Type: Total/NA

Analyte	Spike Added	LCSD Result	LCSD Qualifier	Unit	D	%Rec	%Rec. Limits	RPD	RPD Limit
1,2-Dichloropropane	25.0	24.0		ug/L		96	70 - 130	2	20
1,3,5-Trimethylbenzene	25.0	22.3		ug/L		89	70 - 130	2	20
1,3-Dichlorobenzene	25.0	23.3		ug/L		93	70 - 130	4	20
1,3-Dichloropropane	25.0	23.9		ug/L		96	70 - 130	4	20
1,4-Dichlorobenzene	25.0	23.0		ug/L		92	70 - 130	4	20
1,4-Dioxane	1000	1020		ug/L		102	70 - 130	7	20
2,2-Dichloropropane	25.0	27.1		ug/L		108	70 - 130	0	20
2-Butanone (MEK)	125	141		ug/L		113	70 - 130	2	20
2-Chlorotoluene	25.0	24.7		ug/L		99	70 - 130	2	20
2-Hexanone	125	96.6		ug/L		77	70 - 130	2	20
4-Chlorotoluene	25.0	24.0		ug/L		96	70 - 130	2	20
4-Isopropyltoluene	25.0	22.6		ug/L		90	70 - 130	0	20
4-Methyl-2-pentanone (MIBK)	125	93.5		ug/L		75	70 - 130	1	20
Acetone	125	100		ug/L		80	70 - 130	1	20
Benzene	25.0	24.5		ug/L		98	70 - 130	1	20
Bromobenzene	25.0	23.6		ug/L		94	70 - 130	4	20
Bromoform	25.0	27.3		ug/L		109	70 - 130	4	20
Bromomethane	25.0	26.2		ug/L		105	70 - 130	10	20
Carbon disulfide	25.0	24.3		ug/L		97	70 - 130	3	20
Carbon tetrachloride	25.0	26.4		ug/L		105	70 - 130	4	20
Chlorobenzene	25.0	24.1		ug/L		97	70 - 130	2	20
Chlorobromomethane	25.0	27.3		ug/L		109	70 - 130	4	20
Chlorodibromomethane	25.0	26.0		ug/L		104	70 - 130	5	20
Chloroethane	25.0	22.8		ug/L		91	70 - 130	4	20
Chloroform	25.0	25.0		ug/L		100	70 - 130	1	20
Chloromethane	25.0	16.4	*	ug/L		66	70 - 130	2	20
cis-1,2-Dichloroethene	25.0	25.6		ug/L		102	70 - 130	1	20
cis-1,3-Dichloropropene	25.0	25.3		ug/L		101	70 - 130	6	20
Dichlorobromomethane	25.0	26.3		ug/L		105	70 - 130	4	20
Dichlorodifluoromethane	50.0	60.3		ug/L		121	70 - 130	5	20
Ethyl ether	25.0	24.9		ug/L		99	70 - 130	3	20
Ethylbenzene	25.0	23.4		ug/L		94	70 - 130	0	20
Ethylene Dibromide	25.0	24.9		ug/L		99	70 - 130	2	20
Hexachlorobutadiene	25.0	22.1		ug/L		88	70 - 130	1	20
Isopropyl ether	25.0	20.5		ug/L		82	70 - 130	3	20
Isopropylbenzene	25.0	22.5		ug/L		90	70 - 130	0	20
Methyl tert-butyl ether	25.0	28.4		ug/L		114	70 - 130	2	20
Methylene Chloride	25.0	24.7		ug/L		99	70 - 130	2	20
m-Xylene & p-Xylene	50.0	48.6		ug/L		97	70 - 130	1	20
Naphthalene	25.0	23.1		ug/L		93	70 - 130	3	20
n-Butylbenzene	25.0	21.8		ug/L		87	70 - 130	0	20
N-Propylbenzene	25.0	22.0		ug/L		88	70 - 130	1	20
o-Xylene	25.0	24.2		ug/L		97	70 - 130	1	20
sec-Butylbenzene	25.0	22.3		ug/L		89	70 - 130	1	20
Styrene	25.0	24.2		ug/L		97	70 - 130	3	20
Tert-amyl methyl ether	25.0	26.7		ug/L		107	70 - 130	3	20
Tert-butyl ethyl ether	25.0	23.7		ug/L		95	70 - 130	4	20
tert-Butylbenzene	25.0	23.1		ug/L		93	70 - 130	1	20

Method: 8260C - Volatile Organic Compounds (GC/MS) (Continued)

Lab Sample ID: LCSD 480-108960/5
Matrix: Water
Analysis Batch: 108960

Client Sample ID: Lab Control Sample Dup
Prep Type: Total/NA

Analyte	Spike Added	LCSD Result	LCSD Qualifier	Unit	D	%Rec	%Rec. Limits	RPD	RPD Limit
Tetrachloroethene	25.0	24.6		ug/L		98	70 - 130	1	20
Tetrahydrofuran	125	97.5		ug/L		78	70 - 130	0	20
Toluene	25.0	24.0		ug/L		96	70 - 130	1	20
trans-1,2-Dichloroethene	25.0	25.4		ug/L		101	70 - 130	1	20
trans-1,3-Dichloropropene	25.0	24.1		ug/L		96	70 - 130	3	20
Trichloroethene	25.0	25.3		ug/L		101	70 - 130	1	20
Trichlorofluoromethane	25.0	27.0		ug/L		108	70 - 130	5	20
Vinyl chloride	25.0	21.5		ug/L		86	70 - 130	5	20
Dibromomethane	25.0	26.1		ug/L		105	70 - 130	4	20

Surrogate	*LCSD %Recovery*	*LCSD Qualifier*	*Limits*
Toluene-d8 (Surr)	*97*		*70 - 130*
1,2-Dichloroethane-d4 (Surr)	*95*		*70 - 130*
4-Bromofluorobenzene (Surr)	*114*		*70 - 130*

Method: 522 MOD - 1,4 Dioxane (GC/MS SIM)

Lab Sample ID: MB 200-53504/1-A
Matrix: Water
Analysis Batch: 53519

Client Sample ID: Method Blank
Prep Type: Total/NA
Prep Batch: 53504

Analyte	MB Result	MB Qualifier	RL	MDL	Unit	D	Prepared	Analyzed	Dil Fac
1,4-Dioxane	ND		0.20		ug/L		03/27/13 14:05	03/27/13 18:12	1

Surrogate	*MB %Recovery*	*MB Qualifier*	*Limits*	*Prepared*	*Analyzed*	*Dil Fac*
1,4-Dioxane-d8 (Surr)	*79*		*70 - 130*	*03/27/13 14:05*	*03/27/13 18:12*	*1*

Lab Sample ID: LCS 200-53504/2-A
Matrix: Water
Analysis Batch: 53519

Client Sample ID: Lab Control Sample
Prep Type: Total/NA
Prep Batch: 53504

Analyte	Spike Added	LCS Result	LCS Qualifier	Unit	D	%Rec	%Rec. Limits
1,4-Dioxane	8.00	6.67		ug/L		83	70 - 130

Surrogate	*LCS %Recovery*	*LCS Qualifier*	*Limits*
1,4-Dioxane-d8 (Surr)	*84*		*70 - 130*

QC Association Summary

Client: ERM-Northeast
Project/Site: IDS Wayland

TestAmerica Job ID: 480-34808-1

GC/MS VOA

Analysis Batch: 108684

Lab Sample ID	Client Sample ID	Prep Type	Matrix	Method	Prep Batch
480-34808-1	MW1031-20130321-01	Total/NA	Water	8260C	
480-34808-2	MW1009-20130321-01	Total/NA	Water	8260C	
480-34808-3	MW1001M-20130321-01	Total/NA	Water	8260C	
480-34808-4	MW1001B-20130321-01	Total/NA	Water	8260C	
480-34808-5	MW1004-20130321-01	Total/NA	Water	8260C	
480-34808-6	DUP004-20130321-01	Total/NA	Water	8260C	
480-34808-8	TB002-20130321-01	Total/NA	Water	8260C	
LCS 480-108684/4	Lab Control Sample	Total/NA	Water	8260C	
LCSD 480-108684/5	Lab Control Sample Dup	Total/NA	Water	8260C	
MB 480-108684/7	Method Blank	Total/NA	Water	8260C	

Analysis Batch: 108686

Lab Sample ID	Client Sample ID	Prep Type	Matrix	Method	Prep Batch
480-34808-7	MW1025D-20130321-01	Total/NA	Water	8260C	
480-34808-7 MS	MW1025D-20130321-01	Total/NA	Water	8260C	
480-34808-7 MSD	MW1025D-20130321-01	Total/NA	Water	8260C	
LCS 480-108686/4	Lab Control Sample	Total/NA	Water	8260C	
LCSD 480-108686/5	Lab Control Sample Dup	Total/NA	Water	8260C	
MB 480-108686/7	Method Blank	Total/NA	Water	8260C	

Analysis Batch: 108960

Lab Sample ID	Client Sample ID	Prep Type	Matrix	Method	Prep Batch
480-34808-7 - DL	MW1025D-20130321-01	Total/NA	Water	8260C	
LCS 480-108960/4	Lab Control Sample	Total/NA	Water	8260C	
LCSD 480-108960/5	Lab Control Sample Dup	Total/NA	Water	8260C	
MB 480-108960/7	Method Blank	Total/NA	Water	8260C	

Analysis Batch: 108998

Lab Sample ID	Client Sample ID	Prep Type	Matrix	Method	Prep Batch
480-34808-7	MW1025D-20130321-01	Total/NA	Water	8260B SIM	
LCS 480-108998/3	Lab Control Sample	Total/NA	Water	8260B SIM	
LCSD 480-108998/4	Lab Control Sample Dup	Total/NA	Water	8260B SIM	
MB 480-108998/5	Method Blank	Total/NA	Water	8260B SIM	

GC/MS Semi VOA

Prep Batch: 53504

Lab Sample ID	Client Sample ID	Prep Type	Matrix	Method	Prep Batch
480-34808-7	MW1025D-20130321-01	Total/NA	Water	3535A	
LCS 200-53504/2-A	Lab Control Sample	Total/NA	Water	3535A	
MB 200-53504/1-A	Method Blank	Total/NA	Water	3535A	

Analysis Batch: 53519

Lab Sample ID	Client Sample ID	Prep Type	Matrix	Method	Prep Batch
480-34808-7	MW1025D-20130321-01	Total/NA	Water	522 MOD	53504
LCS 200-53504/2-A	Lab Control Sample	Total/NA	Water	522 MOD	53504
MB 200-53504/1-A	Method Blank	Total/NA	Water	522 MOD	53504

Lab Chronicle

Client: ERM-Northeast
Project/Site: IDS Wayland

TestAmerica Job ID: 480-34808-1

Client Sample ID: MW1031-20130321-01 — Lab Sample ID: 480-34808-1

Date Collected: 03/21/13 09:00 — **Matrix: Water**
Date Received: 03/22/13 12:30

Prep Type	Batch Type	Batch Method	Run	Dilution Factor	Batch Number	Prepared or Analyzed	Analyst	Lab
Total/NA	Analysis	8260C		1	108684	03/22/13 16:53	LH	TAL BUF

Client Sample ID: MW1009-20130321-01 — Lab Sample ID: 480-34808-2

Date Collected: 03/21/13 10:25 — **Matrix: Water**
Date Received: 03/22/13 12:30

Prep Type	Batch Type	Batch Method	Run	Dilution Factor	Batch Number	Prepared or Analyzed	Analyst	Lab
Total/NA	Analysis	8260C		1	108684	03/22/13 17:16	LH	TAL BUF

Client Sample ID: MW1001M-20130321-01 — Lab Sample ID: 480-34808-3

Date Collected: 03/21/13 11:30 — **Matrix: Water**
Date Received: 03/22/13 12:30

Prep Type	Batch Type	Batch Method	Run	Dilution Factor	Batch Number	Prepared or Analyzed	Analyst	Lab
Total/NA	Analysis	8260C		1	108684	03/22/13 17:40	LH	TAL BUF

Client Sample ID: MW1001B-20130321-01 — Lab Sample ID: 480-34808-4

Date Collected: 03/21/13 13:10 — **Matrix: Water**
Date Received: 03/22/13 12:30

Prep Type	Batch Type	Batch Method	Run	Dilution Factor	Batch Number	Prepared or Analyzed	Analyst	Lab
Total/NA	Analysis	8260C		1	108684	03/22/13 18:04	LH	TAL BUF

Client Sample ID: MW1004-20130321-01 — Lab Sample ID: 480-34808-5

Date Collected: 03/21/13 13:20 — **Matrix: Water**
Date Received: 03/22/13 12:30

Prep Type	Batch Type	Batch Method	Run	Dilution Factor	Batch Number	Prepared or Analyzed	Analyst	Lab
Total/NA	Analysis	8260C		1	108684	03/22/13 18:28	LH	TAL BUF

Client Sample ID: DUP004-20130321-01 — Lab Sample ID: 480-34808-6

Date Collected: 03/21/13 11:11 — **Matrix: Water**
Date Received: 03/22/13 12:30

Prep Type	Batch Type	Batch Method	Run	Dilution Factor	Batch Number	Prepared or Analyzed	Analyst	Lab
Total/NA	Analysis	8260C		1	108684	03/22/13 18:52	LH	TAL BUF

Lab Chronicle

Client: ERM-Northeast
Project/Site: IDS Wayland

TestAmerica Job ID: 480-34808-1

Client Sample ID: MW1025D-20130321-01

Lab Sample ID: 480-34808-7

Date Collected: 03/21/13 11:35
Matrix: Water
Date Received: 03/22/13 12:30

Prep Type	Batch Type	Batch Method	Run	Dilution Factor	Batch Number	Prepared or Analyzed	Analyst	Lab
Total/NA	Analysis	8260C		1	108686	03/22/13 20:08	LH	TAL BUF
Total/NA	Analysis	8260C	DL	2	108960	03/25/13 12:56	LH	TAL BUF
Total/NA	Analysis	8260B SIM		1	108998	03/25/13 15:38	TRB	TAL BUF
Total/NA	Prep	3535A			53504	03/27/13 14:05	JAB	TAL BUR
Total/NA	Analysis	522 MOD		1	53519	03/27/13 18:43	RJH	TAL BUR

Client Sample ID: TB002-20130321-01

Lab Sample ID: 480-34808-8

Date Collected: 03/21/13 00:00
Matrix: Water
Date Received: 03/22/13 12:30

Prep Type	Batch Type	Batch Method	Run	Dilution Factor	Batch Number	Prepared or Analyzed	Analyst	Lab
Total/NA	Analysis	8260C		1	108684	03/22/13 19:15	LH	TAL BUF

Laboratory References:

TAL BUF = TestAmerica Buffalo, 10 Hazelwood Drive, Amherst, NY 14228-2298, TEL (716)691-2600

TAL BUR = TestAmerica Burlington, 30 Community Drive, Suite 11, South Burlington, VT 05403, TEL (802)660-1990

Certification Summary

Client: ERM-Northeast
Project/Site: IDS Wayland

TestAmerica Job ID: 480-34808-1

Laboratory: TestAmerica Buffalo

All certifications held by this laboratory are listed. Not all certifications are applicable to this report.

Authority	Program	EPA Region	Certification ID	Expiration Date
Arkansas DEQ	State Program	6	88-0686	07-06-13
California	NELAP	9	1169CA	09-30-13
Connecticut	State Program	1	PH-0568	09-30-14
Florida	NELAP	4	E87672	06-30-13
Georgia	State Program	4	N/A	03-31-13
Georgia	State Program	4	956	06-30-13
Georgia	State Program	4	956	06-30-13
Illinois	NELAP	5	200003	09-30-13
Iowa	State Program	7	374	03-01-13
Kansas	NELAP	7	E-10187	01-31-14
Kentucky	State Program	4	90029	12-31-13
Kentucky (UST)	State Program	4	30	04-01-13
Louisiana	NELAP	6	02031	06-30-13
Maine	State Program	1	NY00044	12-04-13
Maryland	State Program	3	294	03-31-13
Massachusetts	State Program	1	M-NY044	06-30-13
Michigan	State Program	5	9937	04-01-13
Minnesota	NELAP	5	036-999-337	12-31-13
New Hampshire	NELAP	1	2973	09-11-13
New Hampshire	NELAP	1	2337	11-17-13
New Jersey	NELAP	2	NY455	06-30-13
New York	NELAP	2	10026	03-31-13
North Dakota	State Program	8	R-176	03-31-13
Oklahoma	State Program	6	9421	08-31-13
Oregon	NELAP	10	NY200003	06-09-13
Pennsylvania	NELAP	3	68-00281	07-31-13
Rhode Island	State Program	1	LAO00328	12-31-13
Tennessee	State Program	4	TN02970	04-01-13
Texas	NELAP	6	T104704412-11-2	07-31-13
USDA	Federal		P330-11-00386	11-22-14
Virginia	NELAP	3	460185	09-14-13
Washington	State Program	10	C784	02-10-14
West Virginia DEP	State Program	3	252	09-30-13
Wisconsin	State Program	5	998310390	08-31-13

Laboratory: TestAmerica Burlington

All certifications held by this laboratory are listed. Not all certifications are applicable to this report.

Authority	Program	EPA Region	Certification ID	Expiration Date
Connecticut	State Program	1	PH-0751	09-30-13
DE Haz. Subst. Cleanup Act (HSCA)	State Program	3	NA	02-13-15
Florida	NELAP	4	E87467	06-30-13
L-A-B	DoD ELAP		L2336	10-26-13
Louisiana	NELAP	6	176292	06-30-13
Maine	State Program	1	VT00008	04-17-13
Minnesota	NELAP	5	050-999-436	12-31-13
New Hampshire	NELAP	1	200610	12-18-13
New Jersey	NELAP	2	VT972	06-30-13
New York	NELAP	2	10391	04-01-13
Pennsylvania	NELAP	3	68-00489	04-30-13
Rhode Island	State Program	1	LAO00298	12-30-13
USDA	Federal		P330-11-00093	02-17-14

Laboratory: TestAmerica Burlington (Continued)

All certifications held by this laboratory are listed. Not all certifications are applicable to this report.

Authority	Program	EPA Region	Certification ID	Expiration Date
Vermont	State Program	1	VT-4000	12-31-13
Virginia	NELAP	3	460209	12-14-13

Method Summary

Client: ERM-Northeast
Project/Site: IDS Wayland

TestAmerica Job ID: 480-34808-1

Method	Method Description	Protocol	Laboratory
8260B SIM	Volatile Organic Compounds (GC/MS)	SW846	TAL BUF
8260C	Volatile Organic Compounds (GC/MS)	MA DEP	TAL BUF
522 MOD	1,4 Dioxane (GC/MS SIM)	EPA	TAL BUR

Protocol References:

EPA = US Environmental Protection Agency

MA DEP = Massachusetts Department Of Environmental Protection

SW846 = "Test Methods For Evaluating Solid Waste, Physical/Chemical Methods", Third Edition, November 1986 And Its Updates.

Laboratory References:

TAL BUF = TestAmerica Buffalo, 10 Hazelwood Drive, Amherst, NY 14228-2298, TEL (716)691-2600

TAL BUR = TestAmerica Burlington, 30 Community Drive, Suite 11, South Burlington, VT 05403, TEL (802)660-1990

Sample Summary

Client: ERM-Northeast
Project/Site: IDS Wayland

TestAmerica Job ID: 480-34808-1

Lab Sample ID	Client Sample ID	Matrix	Collected	Received
480-34808-1	MW1031-20130321-01	Water	03/21/13 09:00	03/22/13 12:30
480-34808-2	MW1009-20130321-01	Water	03/21/13 10:25	03/22/13 12:30
480-34808-3	MW1001M-20130321-01	Water	03/21/13 11:30	03/22/13 12:30
480-34808-4	MW1001B-20130321-01	Water	03/21/13 13:10	03/22/13 12:30
480-34808-5	MW1004-20130321-01	Water	03/21/13 13:20	03/22/13 12:30
480-34808-6	DUP004-20130321-01	Water	03/21/13 11:11	03/22/13 12:30
480-34808-7	MW1025D-20130321-01	Water	03/21/13 11:35	03/22/13 12:30
480-34808-8	TB002-20130321-01	Water	03/21/13 00:00	03/22/13 12:30

Login Sample Receipt Checklist

Client: ERM-Northeast

Job Number: 480-34808-1

Login Number: 34808
List Number: 1
Creator: Kolb, Chris M

List Source: TestAmerica Buffalo

Question	Answer	Comment
Radioactivity either was not measured or, if measured, is at or below background	N/A	
The cooler's custody seal, if present, is intact.	True	
The cooler or samples do not appear to have been compromised or tampered with.	True	
Samples were received on ice.	True	
Cooler Temperature is acceptable.	True	
Cooler Temperature is recorded.	True	
COC is present.	True	
COC is filled out in ink and legible.	True	
COC is filled out with all pertinent information.	True	
Is the Field Sampler's name present on COC?	True	
There are no discrepancies between the sample IDs on the containers and the COC.	True	
Samples are received within Holding Time.	True	
Sample containers have legible labels.	True	
Containers are not broken or leaking.	True	
Sample collection date/times are provided.	True	
Appropriate sample containers are used.	True	
Sample bottles are completely filled.	True	
Sample Preservation Verified	True	
There is sufficient vol. for all requested analyses, incl. any requested MS/MSDs	True	
VOA sample vials do not have headspace or bubble is <6mm (1/4") in diameter.	True	
If necessary, staff have been informed of any short hold time or quick TAT needs	True	
Multiphasic samples are not present.	True	
Samples do not require splitting or compositing.	True	
Sampling Company provided.	True	
Samples received within 48 hours of sampling.	True	
Samples requiring field filtration have been filtered in the field.	True	
Chlorine Residual checked.	N/A	

Login Sample Receipt Checklist

Client: ERM-Northeast

Job Number: 480-34808-1

Login Number: 34808
List Number: 1
Creator: Marion, Greg T

List Source: TestAmerica Burlington
List Creation: 03/23/13 01:40 PM

Question	Answer	Comment
Radioactivity wasn't checked or is </= background as measured by a survey meter.	N/A	Lab does not accept radioactive samples.
The cooler's custody seal, if present, is intact.	True	705391
Sample custody seals, if present, are intact.	N/A	
The cooler or samples do not appear to have been compromised or tampered with.	True	
Samples were received on ice.	True	
Cooler Temperature is acceptable.	True	
Cooler Temperature is recorded.	True	3.4ºC IR GUN ID 181/CF=0
COC is present.	True	
COC is filled out in ink and legible.	True	
COC is filled out with all pertinent information.	True	
Is the Field Sampler's name present on COC?	N/A	Received project as a subcontract.
There are no discrepancies between the containers received and the COC.	True	
Samples are received within Holding Time.	True	
Sample containers have legible labels.	True	
Containers are not broken or leaking.	True	
Sample collection date/times are provided.	True	
Appropriate sample containers are used.	True	
Sample bottles are completely filled.	True	
Sample Preservation Verified.	True	Preservation labels on samples match COC
There is sufficient vol. for all requested analyses, incl. any requested MS/MSDs	True	
Containers requiring zero headspace have no headspace or bubble is <6mm (1/4").	N/A	
Multiphasic samples are not present.	N/A	
Samples do not require splitting or compositing.	N/A	
Residual Chlorine Checked.	N/A	

TestAmerica Westfield
Westfield Executive Park 53 Southampton Road
Westfield, MA 01085
Phone (413) 572-4000 Fax (413) 572-3707

Boston Service Center
240 Bear Hill Rd. Suite 104
Waltham, MA 02451
Phone (781) 466-6900 Fax (781) 466-6901

Chain of Custody Record

TestAmerica
THE LEADER IN ENVIRONMENTAL TESTING

Client Information			
Client Contact: Jason Flattery	Sampler: Stacey Briggs	Lab PM:	Carrier Tracking No(s):
	Phone: 978-875-0426	E-Mail:	
Company: ERM			
Address: 1 Beacon St	Due Date Requested:		
City: Boston	TAT Requested (days):		
State, Zip: MA 02108			
Phone: 9-617-447-0757	Quote #:		
Email: Jason.Flattery@erm.com	PO #:		
Project Name/number: Raytheon Wayland 0167058	WO #:		
Site: Wayland	SSOW#:		

COC No: 22860
Page: 1
Job #: 480-34808

Preservation Codes:
A - HCL, B - NaOH, C - Zn Acetate, D - Nitric Acid, E - NaHSO4, F - MeOH, H - Ascorbic Acid, I - Ice, J - DI Water, M - Hexane, N - None, P - Na2O4S, Q - Na2SO3, R - Na2S2SO3, S - H2SO4, Z - other (specify)

Regulatory programs:
MCP ☒ GW1/S1 ☐
RCP ☐ CT RSR ☐
DEP Form ☐ EDD Required ☐

Analysis Requested

Sample Identification	Sample Date	Sample Time	Sample Type (C=comp, G=grab)	Matrix (W=water, S=solid, O=waste/oil, BT=Tissue, A=Air)	Sampler's Initials	Field Filtered Sample?	Perform MS/MSD?	8260MCP	8260SIM 1,4 Dioxane	522 1,4 Dioxane	Total Number of containers	Special Instructions/Note:
			Preservation Code:									
MW1031-20130321-01	3/21/13	9.00		W	CC			3				
MW1009-20130321-01	3/21/13	10:25		W	CC			3				
MW1001M-20130321-01	3/21/13	11:30		W	CC			3				
MW1001D-20130321-01	3/21/13	13:10		W	CC			3				
MW1004-20130321-01	3/21/13	13:20		W	SC			3				
DUP004-20130321-01	3/21/13	11:11		W	SC			3				
MW1025D-20130321-01	3/21/13	11:35		W	SB			3	2	1		
MW1025D-20130321-01-MS	3/21/13	11:35		W	SB			3				
MW1025D-20130321-01-MSD	3/21/13	11:35		W	SB			3				
TB002-20130321-01				W				2				

Possible Hazard Identification
☒ Non-Hazard ☐ Flammable ☐ Skin Irritant ☐ Poison B ☐ Unknown ☐ Radiological

Sample Disposal (A fee may be assessed if samples are retained longer than 1 month)
☐ Return To Client ☒ Disposal By Lab ☐ Archive For _____ Months

Deliverable Requested: I, II, III, IV, Other (specify)

Special Instructions/QC Requirements:

Relinquished by:	Date/Time:	Company	Received by:	Date/Time:	Company
[signature]	3/21/13 15:20	ERM	[signature]	3/21/13 3:20	TAL
[signature]	3/21/13 1630	TAL	[signature]	3/22/13 1230	TA

Custody Seals Intact: Δ Yes Δ No
Custody Seal No.:
Cooler Temperature(s) °C and Other Remarks: 0.8 ICE #1

TAL-8245-360 1111

TestAmerica

THE LEADER IN ENVIRONMENTAL TESTING

ANALYTICAL REPORT

TestAmerica Laboratories, Inc.
TestAmerica Buffalo
10 Hazelwood Drive
Amherst, NY 14228-2298
Tel: (716)691-2600

TestAmerica Job ID: 480-34934-1
Client Project/Site: IDS Wayland

For:
ERM-Northeast
One Beacon Steet
5th Floor
Boston, Massachusetts 02108

Attn: Jason Flattery

Authorized for release by:
3/29/2013 4:40:35 PM
Steve Hartmann
Lab Director
steve.hartmann@testamericainc.com

Designee for

Becky Mason
Project Manager II
becky.mason@testamericainc.com

LINKS

Review your project results through TotalAccess

Have a Question? Ask The Expert

Visit us at: www.testamericainc.com

The test results in this report meet all 2003 NELAC and 2009 TNI requirements for accredited parameters, exceptions are noted in this report. This report may not be reproduced except in full, and with written approval from the laboratory. For questions please contact the Project Manager at the e-mail address or telephone number listed on this page.

This report has been electronically signed and authorized by the signatory. Electronic signature is intended to be the legally binding equivalent of a traditionally handwritten signature.

Results relate only to the items tested and the sample(s) as received by the laboratory.

Table of Contents

Cover Page 1
Table of Contents 2
Definitions/Glossary 3
Case Narrative 4
Detection Summary 6
Client Sample Results 7
Surrogate Summary 23
QC Sample Results 25
QC Association Summary 40
Lab Chronicle 41
Certification Summary 43
Method Summary 45
Sample Summary 46
Receipt Checklists 47
Chain of Custody 49

Qualifiers

GC/MS VOA

Qualifier	Qualifier Description
*	LCS or LCSD exceeds the control limits
F	MS or MSD exceeds the control limits

Glossary

Abbreviation	These commonly used abbreviations may or may not be present in this report.
¤	Listed under the "D" column to designate that the result is reported on a dry weight basis
%R	Percent Recovery
CNF	Contains no Free Liquid
DER	Duplicate error ratio (normalized absolute difference)
DL, RA, RE, IN	Indicates a Dilution, Re-analysis, Re-extraction, or additional Initial metals/anion analysis of the sample
DLC	Decision level concentration
MDA	Minimum detectable activity
EDL	Estimated Detection Limit
MDC	Minimum detectable concentration
MDL	Method Detection Limit
ML	Minimum Level (Dioxin)
ND	Not detected at the reporting limit (or MDL or EDL if shown)
PQL	Practical Quantitation Limit
QC	Quality Control
RER	Relative error ratio
RL	Reporting Limit or Requested Limit (Radiochemistry)
RPD	Relative Percent Difference, a measure of the relative difference between two points
TEF	Toxicity Equivalent Factor (Dioxin)
TEQ	Toxicity Equivalent Quotient (Dioxin)

Job ID: 480-34934-1

Laboratory: TestAmerica Buffalo

Narrative

With the exceptions noted as flags or footnotes, standard analytical protocols were followed in the analysis of the samples and no problems were encountered or anomalies observed. In addition all laboratory quality control samples were within established control limits, with any exceptions noted below. Each sample was analyzed to achieve the lowest possible reporting limit within the constraints of the method. In some cases, due to interference or analytes present at high concentrations, samples were diluted. For diluted samples, the reporting limits are adjusted relative to the dilution required.

Calculations are performed before rounding to avoid round-off errors in calculated results.

All holding times were met and proper preservation noted for the methods performed on these samples, unless otherwise detailed in the individual sections below.

RECEIPT

The samples were received on 03/23/2013; the samples arrived in good condition, properly preserved and on ice. The temperature of the coolers at receipt was 3.4 C.

1,4-DIOXANE (SIM)

Samples MW1024D-20130322-01 (480-34934-1) and MW1026D-20130322-01 (480-34934-5) were analyzed for 1,4-Dioxane (SIM) in accordance with EPA 522 MOD. The samples were prepared and analyzed on 03/27/2013.

No difficulties were encountered during the 1,4-Dioxane (SIM) analyses.

All quality control parameters were within the acceptance limits.

VOLATILE ORGANIC COMPOUNDS (GC-MS SIM)

Samples MW1024D-20130322-01 (480-34934-1) and MW1026D-20130322-01 (480-34934-5) were analyzed for volatile organic compounds (GC-MS SIM) in accordance with EPA SW-846 Method 8260B SIM. The samples were analyzed on 03/26/2013.

No difficulties were encountered during the VOA SIM analyses.

All quality control parameters were within the acceptance limits.

VOLATILE ORGANIC COMPOUNDS (GC-MS)

Samples MW1024D-20130322-01 (480-34934-1), MW1016D-20130322-01 (480-34934-2), MW1003-20130322-01 (480-34934-3), MW1014-20130322-01 (480-34934-4), MW1026D-20130322-01 (480-34934-5), MW1013-20130322-01 (480-34934-6), MW1002B-20130322-01 (480-34934-7), MW1002M-20130322-01 (480-34934-8) and TB003-20130322-01 (480-34934-9) were analyzed for volatile organic compounds (GC-MS) in accordance with SW846 8260C. The samples were analyzed on 03/25/2013 and 03/26/2013.

The continuing calibration verification (CCV) for Chloromethane associated with batch 109114 recovered above the MCP upper control limit. MCP protocol allows for 20% of the target compounds to be outside the 20% difference but not over 40% difference.

The laboratory control sample (LCS) and / or the laboratory control sample duplicate (LCSD) for batch 108964 exceeded control limits for the following analyte: 2-Butanone (MEK). This is due to the coelution with Ethyl acetate in the mega mix spike solution.

Styrene failed the recovery criteria low for the MS of sample MW1016D-20130322-01MS (480-34934-2) in batch 480-108964. 2-Butanone (MEK) and Dichlorodifluoromethane failed the recovery criteria high for the MSD of sample MW1016D-20130322-01MSD (480-34934-2) in batch 480-108964. Refer to the QC report for details.

With the exception of diluted samples, per question G on the MassDEP Analytical Protocol Certification Form, TestAmerica's routine reporting limits do not achieve the CAM reporting limits specified in this CAM protocol for 1,2-dibromo-3-chloropropane, Carbon Disulfide, Isopropyl Ether, Naphthalene, tert-Butyl Ethyl Ether, tert-Amyl Methyl Ether, & Tetrahydrofuran.

No other difficulties were encountered during the volatile organic compounds (GC-MS) analyses.

All other quality control parameters were within the acceptance limits.

MassDEP Analytical Protocol Certification Form

Laboratory Name: **TestAmerica Buffalo** Project #: **480-34934**

Project Location: **Wayland** RTN:

This form provides certifications for the following data set: list Laboratory Sample ID Number(s):

480-34934-[1-9]

Matrices: [X] Groundwater/Surface Water [ ] Soil/Sediment [ ] Drinking Water [ ] Air [ ] Other:

CAM Protocols (check all that apply below):

8260 VOC CAM II A [X]	7470/7471 Hg CAM III B [ ]	Mass DEP VPH CAM IV A [ ]	8081 Pesticides CAM V B [ ]	7196 Hex Cr CAM VI B [ ]	Mass DEP APH CAM IX A [ ]
8270 SVOC CAM II B [ ]	7010 Metals CAM III C [ ]	Mass DEP EPH CAM IV B [ ]	8151 Herbicides CAM V C [ ]	8330 Explosives CAM VIII A [ ]	TO-15 VOC CAM IX B [ ]
6010 Metals CAM III A [ ]	6020 Metals CAM III D [ ]	8082 PCB CAM V A [ ]	9014 Total Cyanide/PAC CAM VI A [ ]	6860 Perchlorate CAM VIII B [ ]	

Affirmative Responses to Questions A through F are required for "Presumptive Certainty" status

A	Were all samples received in a condition consistent with those described on the Chain-of-Custody, properly preserved (including temperature) in the field or laboratory, and prepared/analyzed within method holding time.	[X] Yes [ ] No
B	Were the analytical method(s) and all associated QC requirements specified in the selected CAM protocol(s) followed?	[X] Yes [ ] No
C	Were all required corrective actions and analytical response actions specified in the selected CAM protocol(s) implemented for all identified performance standard non-conformances?	[X] Yes [ ] No
D	Does the laboratory report comply with all the reporting requirements specified in CAM VII A, "Quality Assurance and Quality Control Guidelines for the Acquisition and Reporting of Analytical Data"?	[X] Yes [ ] No
E	a. VPH, EPH and APH Methods only: Was each method conducted without significant modification(s)? (Refer to the individual method(s) for a list of significant modifications). b. APH and TO-15 Methods only: Was the complete analyte list reported for each method?	[ ] Yes [ ] No [ ] Yes [ ] No
F	Were all applicable CAM protocol QC and performance standard non-conformances identified and evaluated in a laboratory narrative (including all "No" responses to Questions A through E)?	[X] Yes [ ] No

Responses to Questions G, H and I below are required for "Presumptive Certainty" status

G	Were the reporting limits at or below all CAM reporting limits specified in the selected CAM protocol(s)?	[ ] Yes [X] No[1]

***Data User Note:* Data that achieve "Presumptive Certainty" status may not necessarily meet the data usability and representativeness requirements described in 310 CMR 40. 1056 (2)(k) and WCS-07-350**

H	Were **all** QC performance standards specified in the CAM protocol(s) achieved?	[ ] Yes [X] No[1]
I	Were results reported for the complete analyte list specified in the selected CAM protocol(s) ?	[X] Yes [ ] No[1]

[1] All negative responses must be addressed in an attached laboratory narrative.

I, the undersigned, attest under the pains and penalties of perjury that, based upon my personal inquiry of those responsible for obtaining the information, the material contained in this analytical report is, to the best of my knowledge and belief, is accurate and complete.

Signature: Position: Service Center Manager/Lab Director-TestAmerica Westfield

Printed Name: Steven C. Hartmann Date: 3/29/13 16:37

This form has been electronically signed and approved

Detection Summary

Client: ERM-Northeast
Project/Site: IDS Wayland

TestAmerica Job ID: 480-34934-1

Client Sample ID: MW1024D-20130322-01 — Lab Sample ID: 480-34934-1

Analyte	Result	Qualifier	RL	MDL	Unit	Dil Fac	D	Method	Prep Type
cis-1,2-Dichloroethene	13		1.0		ug/L	1		8260C	Total/NA
Trichloroethene	73		1.0		ug/L	1		8260C	Total/NA
1,4-Dioxane	0.40		0.20		ug/L	1		522 MOD	Total/NA

Client Sample ID: MW1016D-20130322-01 — Lab Sample ID: 480-34934-2

Analyte	Result	Qualifier	RL	MDL	Unit	Dil Fac	D	Method	Prep Type
cis-1,2-Dichloroethene	4.1		1.0		ug/L	1		8260C	Total/NA
Trichloroethene	28		1.0		ug/L	1		8260C	Total/NA

Client Sample ID: MW1003-20130322-01 — Lab Sample ID: 480-34934-3

Analyte	Result	Qualifier	RL	MDL	Unit	Dil Fac	D	Method	Prep Type
cis-1,2-Dichloroethene	3.2		1.0		ug/L	1		8260C	Total/NA
Trichloroethene	4.4		1.0		ug/L	1		8260C	Total/NA

Client Sample ID: MW1014-20130322-01 — Lab Sample ID: 480-34934-4

Analyte	Result	Qualifier	RL	MDL	Unit	Dil Fac	D	Method	Prep Type
Trichloroethene	4.0		1.0		ug/L	1		8260C	Total/NA

Client Sample ID: MW1026D-20130322-01 — Lab Sample ID: 480-34934-5

Analyte	Result	Qualifier	RL	MDL	Unit	Dil Fac	D	Method	Prep Type
cis-1,2-Dichloroethene	2.4		1.0		ug/L	1		8260C	Total/NA
Trichloroethene	19		1.0		ug/L	1		8260C	Total/NA
1,4-Dioxane	0.43		0.20		ug/L	1		522 MOD	Total/NA

Client Sample ID: MW1013-20130322-01 — Lab Sample ID: 480-34934-6

No Detections.

Client Sample ID: MW1002B-20130322-01 — Lab Sample ID: 480-34934-7

No Detections.

Client Sample ID: MW1002M-20130322-01 — Lab Sample ID: 480-34934-8

No Detections.

Client Sample ID: TB003-20130322-01 — Lab Sample ID: 480-34934-9

No Detections.

This Detection Summary does not include radiochemical test results.

Client Sample Results

Client: ERM-Northeast
Project/Site: IDS Wayland

TestAmerica Job ID: 480-34934-1

Client Sample ID: MW1024D-20130322-01

Lab Sample ID: 480-34934-1

Date Collected: 03/22/13 10:20

Matrix: Water

Date Received: 03/23/13 08:30

Method: 8260B SIM - Volatile Organic Compounds (GC/MS)

Analyte	Result	Qualifier	RL	MDL	Unit	D	Prepared	Analyzed	Dil Fac
1,4-Dioxane	ND		1.6		ug/L			03/26/13 23:23	1

Surrogate	*%Recovery*	*Qualifier*	*Limits*	*Prepared*	*Analyzed*	*Dil Fac*
TBA-d9 (Surr)	*120*		*50 - 150*		*03/26/13 23:23*	*1*
Dibromofluoromethane (Surr)	*88*		*50 - 150*		*03/26/13 23:23*	*1*

Method: 8260C - Volatile Organic Compounds (GC/MS)

Analyte	Result	Qualifier	RL	MDL	Unit	D	Prepared	Analyzed	Dil Fac
1,1,1,2-Tetrachloroethane	ND		1.0		ug/L			03/25/13 18:55	1
1,1,1-Trichloroethane	ND		1.0		ug/L			03/25/13 18:55	1
1,1,2,2-Tetrachloroethane	ND		0.50		ug/L			03/25/13 18:55	1
1,1,2-Trichloroethane	ND		1.0		ug/L			03/25/13 18:55	1
1,1-Dichloroethane	ND		1.0		ug/L			03/25/13 18:55	1
1,1-Dichloroethene	ND		1.0		ug/L			03/25/13 18:55	1
1,1-Dichloropropene	ND		1.0		ug/L			03/25/13 18:55	1
1,2,3-Trichlorobenzene	ND		1.0		ug/L			03/25/13 18:55	1
1,2,3-Trichloropropane	ND		1.0		ug/L			03/25/13 18:55	1
1,2,4-Trichlorobenzene	ND		1.0		ug/L			03/25/13 18:55	1
1,2,4-Trimethylbenzene	ND		1.0		ug/L			03/25/13 18:55	1
1,2-Dibromo-3-Chloropropane	ND		5.0		ug/L			03/25/13 18:55	1
1,2-Dichlorobenzene	ND		1.0		ug/L			03/25/13 18:55	1
1,2-Dichloroethane	ND		1.0		ug/L			03/25/13 18:55	1
1,2-Dichloropropane	ND		1.0		ug/L			03/25/13 18:55	1
1,3,5-Trimethylbenzene	ND		1.0		ug/L			03/25/13 18:55	1
1,3-Dichlorobenzene	ND		1.0		ug/L			03/25/13 18:55	1
1,3-Dichloropropane	ND		1.0		ug/L			03/25/13 18:55	1
1,4-Dichlorobenzene	ND		1.0		ug/L			03/25/13 18:55	1
1,4-Dioxane	ND		50		ug/L			03/25/13 18:55	1
2,2-Dichloropropane	ND		1.0		ug/L			03/25/13 18:55	1
2-Butanone (MEK)	ND	*	10		ug/L			03/25/13 18:55	1
2-Chlorotoluene	ND		1.0		ug/L			03/25/13 18:55	1
2-Hexanone	ND		10		ug/L			03/25/13 18:55	1
4-Chlorotoluene	ND		1.0		ug/L			03/25/13 18:55	1
4-Isopropyltoluene	ND		1.0		ug/L			03/25/13 18:55	1
4-Methyl-2-pentanone (MIBK)	ND		10		ug/L			03/25/13 18:55	1
Acetone	ND		50		ug/L			03/25/13 18:55	1
Benzene	ND		1.0		ug/L			03/25/13 18:55	1
Bromobenzene	ND		1.0		ug/L			03/25/13 18:55	1
Bromoform	ND		1.0		ug/L			03/25/13 18:55	1
Bromomethane	ND		2.0		ug/L			03/25/13 18:55	1
Carbon disulfide	ND		10		ug/L			03/25/13 18:55	1
Carbon tetrachloride	ND		1.0		ug/L			03/25/13 18:55	1
Chlorobenzene	ND		1.0		ug/L			03/25/13 18:55	1
Chlorobromomethane	ND		1.0		ug/L			03/25/13 18:55	1
Chlorodibromomethane	ND		0.50		ug/L			03/25/13 18:55	1
Chloroethane	ND		2.0		ug/L			03/25/13 18:55	1
Chloroform	ND		1.0		ug/L			03/25/13 18:55	1
Chloromethane	ND		2.0		ug/L			03/25/13 18:55	1
cis-1,2-Dichloroethene	**13**		1.0		ug/L			03/25/13 18:55	1
cis-1,3-Dichloropropene	ND		0.40		ug/L			03/25/13 18:55	1

Client Sample ID: MW1024D-20130322-01

Lab Sample ID: 480-34934-1

Date Collected: 03/22/13 10:20

Matrix: Water

Date Received: 03/23/13 08:30

Method: 8260C - Volatile Organic Compounds (GC/MS) (Continued)

Analyte	Result	Qualifier	RL	MDL	Unit	D	Prepared	Analyzed	Dil Fac
Dichlorobromomethane	ND		0.50		ug/L			03/25/13 18:55	1
Dichlorodifluoromethane	ND		1.0		ug/L			03/25/13 18:55	1
Ethyl ether	ND		1.0		ug/L			03/25/13 18:55	1
Ethylbenzene	ND		1.0		ug/L			03/25/13 18:55	1
Ethylene Dibromide	ND		1.0		ug/L			03/25/13 18:55	1
Hexachlorobutadiene	ND		0.40		ug/L			03/25/13 18:55	1
Isopropyl ether	ND		10		ug/L			03/25/13 18:55	1
Isopropylbenzene	ND		1.0		ug/L			03/25/13 18:55	1
Methyl tert-butyl ether	ND		1.0		ug/L			03/25/13 18:55	1
Methylene Chloride	ND		1.0		ug/L			03/25/13 18:55	1
m-Xylene & p-Xylene	ND		2.0		ug/L			03/25/13 18:55	1
Naphthalene	ND		5.0		ug/L			03/25/13 18:55	1
n-Butylbenzene	ND		1.0		ug/L			03/25/13 18:55	1
N-Propylbenzene	ND		1.0		ug/L			03/25/13 18:55	1
o-Xylene	ND		1.0		ug/L			03/25/13 18:55	1
sec-Butylbenzene	ND		1.0		ug/L			03/25/13 18:55	1
Styrene	ND		1.0		ug/L			03/25/13 18:55	1
Tert-amyl methyl ether	ND		5.0		ug/L			03/25/13 18:55	1
Tert-butyl ethyl ether	ND		5.0		ug/L			03/25/13 18:55	1
tert-Butylbenzene	ND		1.0		ug/L			03/25/13 18:55	1
Tetrachloroethene	ND		1.0		ug/L			03/25/13 18:55	1
Tetrahydrofuran	ND		10		ug/L			03/25/13 18:55	1
Toluene	ND		1.0		ug/L			03/25/13 18:55	1
trans-1,2-Dichloroethene	ND		1.0		ug/L			03/25/13 18:55	1
trans-1,3-Dichloropropene	ND		0.40		ug/L			03/25/13 18:55	1
Trichloroethene	**73**		1.0		ug/L			03/25/13 18:55	1
Trichlorofluoromethane	ND		1.0		ug/L			03/25/13 18:55	1
Vinyl chloride	ND		0.50		ug/L			03/25/13 18:55	1
Dibromomethane	ND		1.0		ug/L			03/25/13 18:55	1

Surrogate	*%Recovery*	*Qualifier*	*Limits*	*Prepared*	*Analyzed*	*Dil Fac*
Toluene-d8 (Surr)	*96*		*70 - 130*		*03/25/13 18:55*	*1*
1,2-Dichloroethane-d4 (Surr)	*93*		*70 - 130*		*03/25/13 18:55*	*1*
4-Bromofluorobenzene (Surr)	*101*		*70 - 130*		*03/25/13 18:55*	*1*

Method: 522 MOD - 1,4 Dioxane (GC/MS SIM)

Analyte	Result	Qualifier	RL	MDL	Unit	D	Prepared	Analyzed	Dil Fac
1,4-Dioxane	**0.40**		0.20		ug/L		03/27/13 14:05	03/27/13 20:01	1

Surrogate	*%Recovery*	*Qualifier*	*Limits*	*Prepared*	*Analyzed*	*Dil Fac*
1,4-Dioxane-d8 (Surr)	*76*		*70 - 130*	*03/27/13 14:05*	*03/27/13 20:01*	*1*

Client Sample ID: MW1016D-20130322-01

Lab Sample ID: 480-34934-2

Date Collected: 03/22/13 09:15

Matrix: Water

Date Received: 03/23/13 08:30

Method: 8260C - Volatile Organic Compounds (GC/MS)

Analyte	Result	Qualifier	RL	MDL	Unit	D	Prepared	Analyzed	Dil Fac
1,1,1,2-Tetrachloroethane	ND		1.0		ug/L			03/25/13 19:18	1
1,1,1-Trichloroethane	ND		1.0		ug/L			03/25/13 19:18	1

Client: ERM-Northeast
Project/Site: IDS Wayland

TestAmerica Job ID: 480-34934-1

Client Sample ID: MW1016D-20130322-01
Date Collected: 03/22/13 09:15
Date Received: 03/23/13 08:30

Lab Sample ID: 480-34934-2
Matrix: Water

Method: 8260C - Volatile Organic Compounds (GC/MS) (Continued)

Analyte	Result	Qualifier	RL	MDL	Unit	D	Prepared	Analyzed	Dil Fac
1,1,2,2-Tetrachloroethane	ND		0.50		ug/L			03/25/13 19:18	1
1,1,2-Trichloroethane	ND		1.0		ug/L			03/25/13 19:18	1
1,1-Dichloroethane	ND		1.0		ug/L			03/25/13 19:18	1
1,1-Dichloroethene	ND		1.0		ug/L			03/25/13 19:18	1
1,1-Dichloropropene	ND		1.0		ug/L			03/25/13 19:18	1
1,2,3-Trichlorobenzene	ND		1.0		ug/L			03/25/13 19:18	1
1,2,3-Trichloropropane	ND		1.0		ug/L			03/25/13 19:18	1
1,2,4-Trichlorobenzene	ND		1.0		ug/L			03/25/13 19:18	1
1,2,4-Trimethylbenzene	ND		1.0		ug/L			03/25/13 19:18	1
1,2-Dibromo-3-Chloropropane	ND		5.0		ug/L			03/25/13 19:18	1
1,2-Dichlorobenzene	ND		1.0		ug/L			03/25/13 19:18	1
1,2-Dichloroethane	ND		1.0		ug/L			03/25/13 19:18	1
1,2-Dichloropropane	ND		1.0		ug/L			03/25/13 19:18	1
1,3,5-Trimethylbenzene	ND		1.0		ug/L			03/25/13 19:18	1
1,3-Dichlorobenzene	ND		1.0		ug/L			03/25/13 19:18	1
1,3-Dichloropropane	ND		1.0		ug/L			03/25/13 19:18	1
1,4-Dichlorobenzene	ND		1.0		ug/L			03/25/13 19:18	1
1,4-Dioxane	ND		50		ug/L			03/25/13 19:18	1
2,2-Dichloropropane	ND		1.0		ug/L			03/25/13 19:18	1
2-Butanone (MEK)	ND	*	10		ug/L			03/25/13 19:18	1
2-Chlorotoluene	ND		1.0		ug/L			03/25/13 19:18	1
2-Hexanone	ND		10		ug/L			03/25/13 19:18	1
4-Chlorotoluene	ND		1.0		ug/L			03/25/13 19:18	1
4-Isopropyltoluene	ND		1.0		ug/L			03/25/13 19:18	1
4-Methyl-2-pentanone (MIBK)	ND		10		ug/L			03/25/13 19:18	1
Acetone	ND		50		ug/L			03/25/13 19:18	1
Benzene	ND		1.0		ug/L			03/25/13 19:18	1
Bromobenzene	ND		1.0		ug/L			03/25/13 19:18	1
Bromoform	ND		1.0		ug/L			03/25/13 19:18	1
Bromomethane	ND		2.0		ug/L			03/25/13 19:18	1
Carbon disulfide	ND		10		ug/L			03/25/13 19:18	1
Carbon tetrachloride	ND		1.0		ug/L			03/25/13 19:18	1
Chlorobenzene	ND		1.0		ug/L			03/25/13 19:18	1
Chlorobromomethane	ND		1.0		ug/L			03/25/13 19:18	1
Chlorodibromomethane	ND		0.50		ug/L			03/25/13 19:18	1
Chloroethane	ND		2.0		ug/L			03/25/13 19:18	1
Chloroform	ND		1.0		ug/L			03/25/13 19:18	1
Chloromethane	ND		2.0		ug/L			03/25/13 19:18	1
cis-1,2-Dichloroethene	**4.1**		1.0		ug/L			03/25/13 19:18	1
cis-1,3-Dichloropropene	ND		0.40		ug/L			03/25/13 19:18	1
Dichlorobromomethane	ND		0.50		ug/L			03/25/13 19:18	1
Dichlorodifluoromethane	ND		1.0		ug/L			03/25/13 19:18	1
Ethyl ether	ND		1.0		ug/L			03/25/13 19:18	1
Ethylbenzene	ND		1.0		ug/L			03/25/13 19:18	1
Ethylene Dibromide	ND		1.0		ug/L			03/25/13 19:18	1
Hexachlorobutadiene	ND		0.40		ug/L			03/25/13 19:18	1
Isopropyl ether	ND		10		ug/L			03/25/13 19:18	1
Isopropylbenzene	ND		1.0		ug/L			03/25/13 19:18	1
Methyl tert-butyl ether	ND		1.0		ug/L			03/25/13 19:18	1

Client Sample ID: MW1016D-20130322-01

Lab Sample ID: 480-34934-2

Date Collected: 03/22/13 09:15

Matrix: Water

Date Received: 03/23/13 08:30

Method: 8260C - Volatile Organic Compounds (GC/MS) (Continued)

Analyte	Result	Qualifier	RL	MDL	Unit	D	Prepared	Analyzed	Dil Fac
Methylene Chloride	ND		1.0		ug/L			03/25/13 19:18	1
m-Xylene & p-Xylene	ND		2.0		ug/L			03/25/13 19:18	1
Naphthalene	ND		5.0		ug/L			03/25/13 19:18	1
n-Butylbenzene	ND		1.0		ug/L			03/25/13 19:18	1
N-Propylbenzene	ND		1.0		ug/L			03/25/13 19:18	1
o-Xylene	ND		1.0		ug/L			03/25/13 19:18	1
sec-Butylbenzene	ND		1.0		ug/L			03/25/13 19:18	1
Styrene	ND		1.0		ug/L			03/25/13 19:18	1
Tert-amyl methyl ether	ND		5.0		ug/L			03/25/13 19:18	1
Tert-butyl ethyl ether	ND		5.0		ug/L			03/25/13 19:18	1
tert-Butylbenzene	ND		1.0		ug/L			03/25/13 19:18	1
Tetrachloroethene	ND		1.0		ug/L			03/25/13 19:18	1
Tetrahydrofuran	ND		10		ug/L			03/25/13 19:18	1
Toluene	ND		1.0		ug/L			03/25/13 19:18	1
trans-1,2-Dichloroethene	ND		1.0		ug/L			03/25/13 19:18	1
trans-1,3-Dichloropropene	ND		0.40		ug/L			03/25/13 19:18	1
Trichloroethene	**28**		1.0		ug/L			03/25/13 19:18	1
Trichlorofluoromethane	ND		1.0		ug/L			03/25/13 19:18	1
Vinyl chloride	ND		0.50		ug/L			03/25/13 19:18	1
Dibromomethane	ND		1.0		ug/L			03/25/13 19:18	1

Surrogate	*%Recovery*	*Qualifier*	*Limits*	*Prepared*	*Analyzed*	*Dil Fac*
Toluene-d8 (Surr)	*96*		*70 - 130*		*03/25/13 19:18*	*1*
1,2-Dichloroethane-d4 (Surr)	*96*		*70 - 130*		*03/25/13 19:18*	*1*
4-Bromofluorobenzene (Surr)	*101*		*70 - 130*		*03/25/13 19:18*	*1*

Client Sample ID: MW1003-20130322-01

Lab Sample ID: 480-34934-3

Date Collected: 03/22/13 11:25

Matrix: Water

Date Received: 03/23/13 08:30

Method: 8260C - Volatile Organic Compounds (GC/MS)

Analyte	Result	Qualifier	RL	MDL	Unit	D	Prepared	Analyzed	Dil Fac
1,1,1,2-Tetrachloroethane	ND		1.0		ug/L			03/26/13 04:35	1
1,1,1-Trichloroethane	ND		1.0		ug/L			03/26/13 04:35	1
1,1,2,2-Tetrachloroethane	ND		0.50		ug/L			03/26/13 04:35	1
1,1,2-Trichloroethane	ND		1.0		ug/L			03/26/13 04:35	1
1,1-Dichloroethane	ND		1.0		ug/L			03/26/13 04:35	1
1,1-Dichloroethene	ND		1.0		ug/L			03/26/13 04:35	1
1,1-Dichloropropene	ND		1.0		ug/L			03/26/13 04:35	1
1,2,3-Trichlorobenzene	ND		1.0		ug/L			03/26/13 04:35	1
1,2,3-Trichloropropane	ND		1.0		ug/L			03/26/13 04:35	1
1,2,4-Trichlorobenzene	ND		1.0		ug/L			03/26/13 04:35	1
1,2,4-Trimethylbenzene	ND		1.0		ug/L			03/26/13 04:35	1
1,2-Dibromo-3-Chloropropane	ND		5.0		ug/L			03/26/13 04:35	1
1,2-Dichlorobenzene	ND		1.0		ug/L			03/26/13 04:35	1
1,2-Dichloroethane	ND		1.0		ug/L			03/26/13 04:35	1
1,2-Dichloropropane	ND		1.0		ug/L			03/26/13 04:35	1
1,3,5-Trimethylbenzene	ND		1.0		ug/L			03/26/13 04:35	1
1,3-Dichlorobenzene	ND		1.0		ug/L			03/26/13 04:35	1
1,3-Dichloropropane	ND		1.0		ug/L			03/26/13 04:35	1

Client Sample ID: MW1003-20130322-01
Date Collected: 03/22/13 11:25
Date Received: 03/23/13 08:30

Lab Sample ID: 480-34934-3
Matrix: Water

Method: 8260C - Volatile Organic Compounds (GC/MS) (Continued)

Analyte	Result	Qualifier	RL	MDL	Unit	D	Prepared	Analyzed	Dil Fac
1,4-Dichlorobenzene	ND		1.0		ug/L			03/26/13 04:35	1
1,4-Dioxane	ND		50		ug/L			03/26/13 04:35	1
2,2-Dichloropropane	ND		1.0		ug/L			03/26/13 04:35	1
2-Butanone (MEK)	ND		10		ug/L			03/26/13 04:35	1
2-Chlorotoluene	ND		1.0		ug/L			03/26/13 04:35	1
2-Hexanone	ND		10		ug/L			03/26/13 04:35	1
4-Chlorotoluene	ND		1.0		ug/L			03/26/13 04:35	1
4-Isopropyltoluene	ND		1.0		ug/L			03/26/13 04:35	1
4-Methyl-2-pentanone (MIBK)	ND		10		ug/L			03/26/13 04:35	1
Acetone	ND		50		ug/L			03/26/13 04:35	1
Benzene	ND		1.0		ug/L			03/26/13 04:35	1
Bromobenzene	ND		1.0		ug/L			03/26/13 04:35	1
Bromoform	ND		1.0		ug/L			03/26/13 04:35	1
Bromomethane	ND		2.0		ug/L			03/26/13 04:35	1
Carbon disulfide	ND		10		ug/L			03/26/13 04:35	1
Carbon tetrachloride	ND		1.0		ug/L			03/26/13 04:35	1
Chlorobenzene	ND		1.0		ug/L			03/26/13 04:35	1
Chlorobromomethane	ND		1.0		ug/L			03/26/13 04:35	1
Chlorodibromomethane	ND		0.50		ug/L			03/26/13 04:35	1
Chloroethane	ND		2.0		ug/L			03/26/13 04:35	1
Chloroform	ND		1.0		ug/L			03/26/13 04:35	1
Chloromethane	ND		2.0		ug/L			03/26/13 04:35	1
cis-1,2-Dichloroethene	**3.2**		1.0		ug/L			03/26/13 04:35	1
cis-1,3-Dichloropropene	ND		0.40		ug/L			03/26/13 04:35	1
Dichlorobromomethane	ND		0.50		ug/L			03/26/13 04:35	1
Dichlorodifluoromethane	ND		1.0		ug/L			03/26/13 04:35	1
Ethyl ether	ND		1.0		ug/L			03/26/13 04:35	1
Ethylbenzene	ND		1.0		ug/L			03/26/13 04:35	1
Ethylene Dibromide	ND		1.0		ug/L			03/26/13 04:35	1
Hexachlorobutadiene	ND		0.40		ug/L			03/26/13 04:35	1
Isopropyl ether	ND		10		ug/L			03/26/13 04:35	1
Isopropylbenzene	ND		1.0		ug/L			03/26/13 04:35	1
Methyl tert-butyl ether	ND		1.0		ug/L			03/26/13 04:35	1
Methylene Chloride	ND		1.0		ug/L			03/26/13 04:35	1
m-Xylene & p-Xylene	ND		2.0		ug/L			03/26/13 04:35	1
Naphthalene	ND		5.0		ug/L			03/26/13 04:35	1
n-Butylbenzene	ND		1.0		ug/L			03/26/13 04:35	1
N-Propylbenzene	ND		1.0		ug/L			03/26/13 04:35	1
o-Xylene	ND		1.0		ug/L			03/26/13 04:35	1
sec-Butylbenzene	ND		1.0		ug/L			03/26/13 04:35	1
Styrene	ND		1.0		ug/L			03/26/13 04:35	1
Tert-amyl methyl ether	ND		5.0		ug/L			03/26/13 04:35	1
Tert-butyl ethyl ether	ND		5.0		ug/L			03/26/13 04:35	1
tert-Butylbenzene	ND		1.0		ug/L			03/26/13 04:35	1
Tetrachloroethene	ND		1.0		ug/L			03/26/13 04:35	1
Tetrahydrofuran	ND		10		ug/L			03/26/13 04:35	1
Toluene	ND		1.0		ug/L			03/26/13 04:35	1
trans-1,2-Dichloroethene	ND		1.0		ug/L			03/26/13 04:35	1
trans-1,3-Dichloropropene	ND		0.40		ug/L			03/26/13 04:35	1

Client Sample ID: MW1003-20130322-01

Lab Sample ID: 480-34934-3

Date Collected: 03/22/13 11:25

Matrix: Water

Date Received: 03/23/13 08:30

Method: 8260C - Volatile Organic Compounds (GC/MS) (Continued)

Analyte	Result	Qualifier	RL	MDL	Unit	D	Prepared	Analyzed	Dil Fac
Trichloroethene	**4.4**		1.0		ug/L			03/26/13 04:35	1
Trichlorofluoromethane	ND		1.0		ug/L			03/26/13 04:35	1
Vinyl chloride	ND		0.50		ug/L			03/26/13 04:35	1
Dibromomethane	ND		1.0		ug/L			03/26/13 04:35	1

Surrogate	*%Recovery*	*Qualifier*	*Limits*	*Prepared*	*Analyzed*	*Dil Fac*
Toluene-d8 (Surr)	*97*		*70 - 130*		*03/26/13 04:35*	*1*
1,2-Dichloroethane-d4 (Surr)	*93*		*70 - 130*		*03/26/13 04:35*	*1*
4-Bromofluorobenzene (Surr)	*102*		*70 - 130*		*03/26/13 04:35*	*1*

Client Sample ID: MW1014-20130322-01

Lab Sample ID: 480-34934-4

Date Collected: 03/22/13 10:55

Matrix: Water

Date Received: 03/23/13 08:30

Method: 8260C - Volatile Organic Compounds (GC/MS)

Analyte	Result	Qualifier	RL	MDL	Unit	D	Prepared	Analyzed	Dil Fac
1,1,1,2-Tetrachloroethane	ND		1.0		ug/L			03/26/13 04:59	1
1,1,1-Trichloroethane	ND		1.0		ug/L			03/26/13 04:59	1
1,1,2,2-Tetrachloroethane	ND		0.50		ug/L			03/26/13 04:59	1
1,1,2-Trichloroethane	ND		1.0		ug/L			03/26/13 04:59	1
1,1-Dichloroethane	ND		1.0		ug/L			03/26/13 04:59	1
1,1-Dichloroethene	ND		1.0		ug/L			03/26/13 04:59	1
1,1-Dichloropropene	ND		1.0		ug/L			03/26/13 04:59	1
1,2,3-Trichlorobenzene	ND		1.0		ug/L			03/26/13 04:59	1
1,2,3-Trichloropropane	ND		1.0		ug/L			03/26/13 04:59	1
1,2,4-Trichlorobenzene	ND		1.0		ug/L			03/26/13 04:59	1
1,2,4-Trimethylbenzene	ND		1.0		ug/L			03/26/13 04:59	1
1,2-Dibromo-3-Chloropropane	ND		5.0		ug/L			03/26/13 04:59	1
1,2-Dichlorobenzene	ND		1.0		ug/L			03/26/13 04:59	1
1,2-Dichloroethane	ND		1.0		ug/L			03/26/13 04:59	1
1,2-Dichloropropane	ND		1.0		ug/L			03/26/13 04:59	1
1,3,5-Trimethylbenzene	ND		1.0		ug/L			03/26/13 04:59	1
1,3-Dichlorobenzene	ND		1.0		ug/L			03/26/13 04:59	1
1,3-Dichloropropane	ND		1.0		ug/L			03/26/13 04:59	1
1,4-Dichlorobenzene	ND		1.0		ug/L			03/26/13 04:59	1
1,4-Dioxane	ND		50		ug/L			03/26/13 04:59	1
2,2-Dichloropropane	ND		1.0		ug/L			03/26/13 04:59	1
2-Butanone (MEK)	ND		10		ug/L			03/26/13 04:59	1
2-Chlorotoluene	ND		1.0		ug/L			03/26/13 04:59	1
2-Hexanone	ND		10		ug/L			03/26/13 04:59	1
4-Chlorotoluene	ND		1.0		ug/L			03/26/13 04:59	1
4-Isopropyltoluene	ND		1.0		ug/L			03/26/13 04:59	1
4-Methyl-2-pentanone (MIBK)	ND		10		ug/L			03/26/13 04:59	1
Acetone	ND		50		ug/L			03/26/13 04:59	1
Benzene	ND		1.0		ug/L			03/26/13 04:59	1
Bromobenzene	ND		1.0		ug/L			03/26/13 04:59	1
Bromoform	ND		1.0		ug/L			03/26/13 04:59	1
Bromomethane	ND		2.0		ug/L			03/26/13 04:59	1
Carbon disulfide	ND		10		ug/L			03/26/13 04:59	1
Carbon tetrachloride	ND		1.0		ug/L			03/26/13 04:59	1

Client Sample ID: MW1014-20130322-01

Lab Sample ID: 480-34934-4

Date Collected: 03/22/13 10:55

Matrix: Water

Date Received: 03/23/13 08:30

Method: 8260C - Volatile Organic Compounds (GC/MS) (Continued)

Analyte	Result	Qualifier	RL	MDL	Unit	D	Prepared	Analyzed	Dil Fac
Chlorobenzene	ND		1.0		ug/L			03/26/13 04:59	1
Chlorobromomethane	ND		1.0		ug/L			03/26/13 04:59	1
Chlorodibromomethane	ND		0.50		ug/L			03/26/13 04:59	1
Chloroethane	ND		2.0		ug/L			03/26/13 04:59	1
Chloroform	ND		1.0		ug/L			03/26/13 04:59	1
Chloromethane	ND		2.0		ug/L			03/26/13 04:59	1
cis-1,2-Dichloroethene	ND		1.0		ug/L			03/26/13 04:59	1
cis-1,3-Dichloropropene	ND		0.40		ug/L			03/26/13 04:59	1
Dichlorobromomethane	ND		0.50		ug/L			03/26/13 04:59	1
Dichlorodifluoromethane	ND		1.0		ug/L			03/26/13 04:59	1
Ethyl ether	ND		1.0		ug/L			03/26/13 04:59	1
Ethylbenzene	ND		1.0		ug/L			03/26/13 04:59	1
Ethylene Dibromide	ND		1.0		ug/L			03/26/13 04:59	1
Hexachlorobutadiene	ND		0.40		ug/L			03/26/13 04:59	1
Isopropyl ether	ND		10		ug/L			03/26/13 04:59	1
Isopropylbenzene	ND		1.0		ug/L			03/26/13 04:59	1
Methyl tert-butyl ether	ND		1.0		ug/L			03/26/13 04:59	1
Methylene Chloride	ND		1.0		ug/L			03/26/13 04:59	1
m-Xylene & p-Xylene	ND		2.0		ug/L			03/26/13 04:59	1
Naphthalene	ND		5.0		ug/L			03/26/13 04:59	1
n-Butylbenzene	ND		1.0		ug/L			03/26/13 04:59	1
N-Propylbenzene	ND		1.0		ug/L			03/26/13 04:59	1
o-Xylene	ND		1.0		ug/L			03/26/13 04:59	1
sec-Butylbenzene	ND		1.0		ug/L			03/26/13 04:59	1
Styrene	ND		1.0		ug/L			03/26/13 04:59	1
Tert-amyl methyl ether	ND		5.0		ug/L			03/26/13 04:59	1
Tert-butyl ethyl ether	ND		5.0		ug/L			03/26/13 04:59	1
tert-Butylbenzene	ND		1.0		ug/L			03/26/13 04:59	1
Tetrachloroethene	ND		1.0		ug/L			03/26/13 04:59	1
Tetrahydrofuran	ND		10		ug/L			03/26/13 04:59	1
Toluene	ND		1.0		ug/L			03/26/13 04:59	1
trans-1,2-Dichloroethene	ND		1.0		ug/L			03/26/13 04:59	1
trans-1,3-Dichloropropene	ND		0.40		ug/L			03/26/13 04:59	1
Trichloroethene	**4.0**		1.0		ug/L			03/26/13 04:59	1
Trichlorofluoromethane	ND		1.0		ug/L			03/26/13 04:59	1
Vinyl chloride	ND		0.50		ug/L			03/26/13 04:59	1
Dibromomethane	ND		1.0		ug/L			03/26/13 04:59	1

Surrogate	*%Recovery*	*Qualifier*	*Limits*	*Prepared*	*Analyzed*	*Dil Fac*
Toluene-d8 (Surr)	*96*		*70 - 130*		*03/26/13 04:59*	*1*
1,2-Dichloroethane-d4 (Surr)	*93*		*70 - 130*		*03/26/13 04:59*	*1*
4-Bromofluorobenzene (Surr)	*100*		*70 - 130*		*03/26/13 04:59*	*1*

Client Sample ID: MW1026D-20130322-01

Lab Sample ID: 480-34934-5

Date Collected: 03/22/13 11:00

Matrix: Water

Date Received: 03/23/13 08:30

Method: 8260B SIM - Volatile Organic Compounds (GC/MS)

Analyte	Result	Qualifier	RL	MDL	Unit	D	Prepared	Analyzed	Dil Fac
1,4-Dioxane	ND		1.6		ug/L			03/26/13 23:48	1

Client Sample Results

Client: ERM-Northeast
Project/Site: IDS Wayland

TestAmerica Job ID: 480-34934-1

Client Sample ID: MW1026D-20130322-01

Lab Sample ID: 480-34934-5

Date Collected: 03/22/13 11:00
Matrix: Water
Date Received: 03/23/13 08:30

Surrogate	*%Recovery*	*Qualifier*	*Limits*	*Prepared*	*Analyzed*	*Dil Fac*
TBA-d9 (Surr)	*125*		*50 - 150*		*03/26/13 23:48*	*1*
Dibromofluoromethane (Surr)	*93*		*50 - 150*		*03/26/13 23:48*	*1*

Method: 8260C - Volatile Organic Compounds (GC/MS)

Analyte	Result	Qualifier	RL	MDL	Unit	D	Prepared	Analyzed	Dil Fac
1,1,1,2-Tetrachloroethane	ND		1.0		ug/L			03/26/13 05:23	1
1,1,1-Trichloroethane	ND		1.0		ug/L			03/26/13 05:23	1
1,1,2,2-Tetrachloroethane	ND		0.50		ug/L			03/26/13 05:23	1
1,1,2-Trichloroethane	ND		1.0		ug/L			03/26/13 05:23	1
1,1-Dichloroethane	ND		1.0		ug/L			03/26/13 05:23	1
1,1-Dichloroethene	ND		1.0		ug/L			03/26/13 05:23	1
1,1-Dichloropropene	ND		1.0		ug/L			03/26/13 05:23	1
1,2,3-Trichlorobenzene	ND		1.0		ug/L			03/26/13 05:23	1
1,2,3-Trichloropropane	ND		1.0		ug/L			03/26/13 05:23	1
1,2,4-Trichlorobenzene	ND		1.0		ug/L			03/26/13 05:23	1
1,2,4-Trimethylbenzene	ND		1.0		ug/L			03/26/13 05:23	1
1,2-Dibromo-3-Chloropropane	ND		5.0		ug/L			03/26/13 05:23	1
1,2-Dichlorobenzene	ND		1.0		ug/L			03/26/13 05:23	1
1,2-Dichloroethane	ND		1.0		ug/L			03/26/13 05:23	1
1,2-Dichloropropane	ND		1.0		ug/L			03/26/13 05:23	1
1,3,5-Trimethylbenzene	ND		1.0		ug/L			03/26/13 05:23	1
1,3-Dichlorobenzene	ND		1.0		ug/L			03/26/13 05:23	1
1,3-Dichloropropane	ND		1.0		ug/L			03/26/13 05:23	1
1,4-Dichlorobenzene	ND		1.0		ug/L			03/26/13 05:23	1
1,4-Dioxane	ND		50		ug/L			03/26/13 05:23	1
2,2-Dichloropropane	ND		1.0		ug/L			03/26/13 05:23	1
2-Butanone (MEK)	ND		10		ug/L			03/26/13 05:23	1
2-Chlorotoluene	ND		1.0		ug/L			03/26/13 05:23	1
2-Hexanone	ND		10		ug/L			03/26/13 05:23	1
4-Chlorotoluene	ND		1.0		ug/L			03/26/13 05:23	1
4-Isopropyltoluene	ND		1.0		ug/L			03/26/13 05:23	1
4-Methyl-2-pentanone (MIBK)	ND		10		ug/L			03/26/13 05:23	1
Acetone	ND		50		ug/L			03/26/13 05:23	1
Benzene	ND		1.0		ug/L			03/26/13 05:23	1
Bromobenzene	ND		1.0		ug/L			03/26/13 05:23	1
Bromoform	ND		1.0		ug/L			03/26/13 05:23	1
Bromomethane	ND		2.0		ug/L			03/26/13 05:23	1
Carbon disulfide	ND		10		ug/L			03/26/13 05:23	1
Carbon tetrachloride	ND		1.0		ug/L			03/26/13 05:23	1
Chlorobenzene	ND		1.0		ug/L			03/26/13 05:23	1
Chlorobromomethane	ND		1.0		ug/L			03/26/13 05:23	1
Chlorodibromomethane	ND		0.50		ug/L			03/26/13 05:23	1
Chloroethane	ND		2.0		ug/L			03/26/13 05:23	1
Chloroform	ND		1.0		ug/L			03/26/13 05:23	1
Chloromethane	ND		2.0		ug/L			03/26/13 05:23	1
cis-1,2-Dichloroethene	**2.4**		1.0		ug/L			03/26/13 05:23	1
cis-1,3-Dichloropropene	ND		0.40		ug/L			03/26/13 05:23	1
Dichlorobromomethane	ND		0.50		ug/L			03/26/13 05:23	1
Dichlorodifluoromethane	ND		1.0		ug/L			03/26/13 05:23	1
Ethyl ether	ND		1.0		ug/L			03/26/13 05:23	1

Client Sample ID: MW1026D-20130322-01

Lab Sample ID: 480-34934-5

Date Collected: 03/22/13 11:00

Matrix: Water

Date Received: 03/23/13 08:30

Method: 8260C - Volatile Organic Compounds (GC/MS) (Continued)

Analyte	Result	Qualifier	RL	MDL	Unit	D	Prepared	Analyzed	Dil Fac
Ethylbenzene	ND		1.0		ug/L			03/26/13 05:23	1
Ethylene Dibromide	ND		1.0		ug/L			03/26/13 05:23	1
Hexachlorobutadiene	ND		0.40		ug/L			03/26/13 05:23	1
Isopropyl ether	ND		10		ug/L			03/26/13 05:23	1
Isopropylbenzene	ND		1.0		ug/L			03/26/13 05:23	1
Methyl tert-butyl ether	ND		1.0		ug/L			03/26/13 05:23	1
Methylene Chloride	ND		1.0		ug/L			03/26/13 05:23	1
m-Xylene & p-Xylene	ND		2.0		ug/L			03/26/13 05:23	1
Naphthalene	ND		5.0		ug/L			03/26/13 05:23	1
n-Butylbenzene	ND		1.0		ug/L			03/26/13 05:23	1
N-Propylbenzene	ND		1.0		ug/L			03/26/13 05:23	1
o-Xylene	ND		1.0		ug/L			03/26/13 05:23	1
sec-Butylbenzene	ND		1.0		ug/L			03/26/13 05:23	1
Styrene	ND		1.0		ug/L			03/26/13 05:23	1
Tert-amyl methyl ether	ND		5.0		ug/L			03/26/13 05:23	1
Tert-butyl ethyl ether	ND		5.0		ug/L			03/26/13 05:23	1
tert-Butylbenzene	ND		1.0		ug/L			03/26/13 05:23	1
Tetrachloroethene	ND		1.0		ug/L			03/26/13 05:23	1
Tetrahydrofuran	ND		10		ug/L			03/26/13 05:23	1
Toluene	ND		1.0		ug/L			03/26/13 05:23	1
trans-1,2-Dichloroethene	ND		1.0		ug/L			03/26/13 05:23	1
trans-1,3-Dichloropropene	ND		0.40		ug/L			03/26/13 05:23	1
Trichloroethene	**19**		1.0		ug/L			03/26/13 05:23	1
Trichlorofluoromethane	ND		1.0		ug/L			03/26/13 05:23	1
Vinyl chloride	ND		0.50		ug/L			03/26/13 05:23	1
Dibromomethane	ND		1.0		ug/L			03/26/13 05:23	1

Surrogate	*%Recovery*	*Qualifier*	*Limits*	*Prepared*	*Analyzed*	*Dil Fac*
Toluene-d8 (Surr)	*96*		*70 - 130*		*03/26/13 05:23*	*1*
1,2-Dichloroethane-d4 (Surr)	*93*		*70 - 130*		*03/26/13 05:23*	*1*
4-Bromofluorobenzene (Surr)	*99*		*70 - 130*		*03/26/13 05:23*	*1*

Method: 522 MOD - 1,4 Dioxane (GC/MS SIM)

Analyte	Result	Qualifier	RL	MDL	Unit	D	Prepared	Analyzed	Dil Fac
1,4-Dioxane	**0.43**		0.20		ug/L		03/27/13 14:05	03/27/13 20:16	1

Surrogate	*%Recovery*	*Qualifier*	*Limits*	*Prepared*	*Analyzed*	*Dil Fac*
1,4-Dioxane-d8 (Surr)	*87*		*70 - 130*	*03/27/13 14:05*	*03/27/13 20:16*	*1*

Client Sample ID: MW1013-20130322-01

Lab Sample ID: 480-34934-6

Date Collected: 03/22/13 09:15

Matrix: Water

Date Received: 03/23/13 08:30

Method: 8260C - Volatile Organic Compounds (GC/MS)

Analyte	Result	Qualifier	RL	MDL	Unit	D	Prepared	Analyzed	Dil Fac
1,1,1,2-Tetrachloroethane	ND		1.0		ug/L			03/26/13 05:46	1
1,1,1-Trichloroethane	ND		1.0		ug/L			03/26/13 05:46	1
1,1,2,2-Tetrachloroethane	ND		0.50		ug/L			03/26/13 05:46	1
1,1,2-Trichloroethane	ND		1.0		ug/L			03/26/13 05:46	1
1,1-Dichloroethane	ND		1.0		ug/L			03/26/13 05:46	1

Client Sample ID: MW1013-20130322-01
Date Collected: 03/22/13 09:15
Date Received: 03/23/13 08:30

Lab Sample ID: 480-34934-6
Matrix: Water

Method: 8260C - Volatile Organic Compounds (GC/MS) (Continued)

Analyte	Result	Qualifier	RL	MDL	Unit	D	Prepared	Analyzed	Dil Fac
1,1-Dichloroethene	ND		1.0		ug/L			03/26/13 05:46	1
1,1-Dichloropropene	ND		1.0		ug/L			03/26/13 05:46	1
1,2,3-Trichlorobenzene	ND		1.0		ug/L			03/26/13 05:46	1
1,2,3-Trichloropropane	ND		1.0		ug/L			03/26/13 05:46	1
1,2,4-Trichlorobenzene	ND		1.0		ug/L			03/26/13 05:46	1
1,2,4-Trimethylbenzene	ND		1.0		ug/L			03/26/13 05:46	1
1,2-Dibromo-3-Chloropropane	ND		5.0		ug/L			03/26/13 05:46	1
1,2-Dichlorobenzene	ND		1.0		ug/L			03/26/13 05:46	1
1,2-Dichloroethane	ND		1.0		ug/L			03/26/13 05:46	1
1,2-Dichloropropane	ND		1.0		ug/L			03/26/13 05:46	1
1,3,5-Trimethylbenzene	ND		1.0		ug/L			03/26/13 05:46	1
1,3-Dichlorobenzene	ND		1.0		ug/L			03/26/13 05:46	1
1,3-Dichloropropane	ND		1.0		ug/L			03/26/13 05:46	1
1,4-Dichlorobenzene	ND		1.0		ug/L			03/26/13 05:46	1
1,4-Dioxane	ND		50		ug/L			03/26/13 05:46	1
2,2-Dichloropropane	ND		1.0		ug/L			03/26/13 05:46	1
2-Butanone (MEK)	ND		10		ug/L			03/26/13 05:46	1
2-Chlorotoluene	ND		1.0		ug/L			03/26/13 05:46	1
2-Hexanone	ND		10		ug/L			03/26/13 05:46	1
4-Chlorotoluene	ND		1.0		ug/L			03/26/13 05:46	1
4-Isopropyltoluene	ND		1.0		ug/L			03/26/13 05:46	1
4-Methyl-2-pentanone (MIBK)	ND		10		ug/L			03/26/13 05:46	1
Acetone	ND		50		ug/L			03/26/13 05:46	1
Benzene	ND		1.0		ug/L			03/26/13 05:46	1
Bromobenzene	ND		1.0		ug/L			03/26/13 05:46	1
Bromoform	ND		1.0		ug/L			03/26/13 05:46	1
Bromomethane	ND		2.0		ug/L			03/26/13 05:46	1
Carbon disulfide	ND		10		ug/L			03/26/13 05:46	1
Carbon tetrachloride	ND		1.0		ug/L			03/26/13 05:46	1
Chlorobenzene	ND		1.0		ug/L			03/26/13 05:46	1
Chlorobromomethane	ND		1.0		ug/L			03/26/13 05:46	1
Chlorodibromomethane	ND		0.50		ug/L			03/26/13 05:46	1
Chloroethane	ND		2.0		ug/L			03/26/13 05:46	1
Chloroform	ND		1.0		ug/L			03/26/13 05:46	1
Chloromethane	ND		2.0		ug/L			03/26/13 05:46	1
cis-1,2-Dichloroethene	ND		1.0		ug/L			03/26/13 05:46	1
cis-1,3-Dichloropropene	ND		0.40		ug/L			03/26/13 05:46	1
Dichlorobromomethane	ND		0.50		ug/L			03/26/13 05:46	1
Dichlorodifluoromethane	ND		1.0		ug/L			03/26/13 05:46	1
Ethyl ether	ND		1.0		ug/L			03/26/13 05:46	1
Ethylbenzene	ND		1.0		ug/L			03/26/13 05:46	1
Ethylene Dibromide	ND		1.0		ug/L			03/26/13 05:46	1
Hexachlorobutadiene	ND		0.40		ug/L			03/26/13 05:46	1
Isopropyl ether	ND		10		ug/L			03/26/13 05:46	1
Isopropylbenzene	ND		1.0		ug/L			03/26/13 05:46	1
Methyl tert-butyl ether	ND		1.0		ug/L			03/26/13 05:46	1
Methylene Chloride	ND		1.0		ug/L			03/26/13 05:46	1
m-Xylene & p-Xylene	ND		2.0		ug/L			03/26/13 05:46	1
Naphthalene	ND		5.0		ug/L			03/26/13 05:46	1

Client Sample ID: MW1013-20130322-01

Lab Sample ID: 480-34934-6

Date Collected: 03/22/13 09:15

Matrix: Water

Date Received: 03/23/13 08:30

Method: 8260C - Volatile Organic Compounds (GC/MS) (Continued)

Analyte	Result	Qualifier	RL	MDL	Unit	D	Prepared	Analyzed	Dil Fac
n-Butylbenzene	ND		1.0		ug/L			03/26/13 05:46	1
N-Propylbenzene	ND		1.0		ug/L			03/26/13 05:46	1
o-Xylene	ND		1.0		ug/L			03/26/13 05:46	1
sec-Butylbenzene	ND		1.0		ug/L			03/26/13 05:46	1
Styrene	ND		1.0		ug/L			03/26/13 05:46	1
Tert-amyl methyl ether	ND		5.0		ug/L			03/26/13 05:46	1
Tert-butyl ethyl ether	ND		5.0		ug/L			03/26/13 05:46	1
tert-Butylbenzene	ND		1.0		ug/L			03/26/13 05:46	1
Tetrachloroethene	ND		1.0		ug/L			03/26/13 05:46	1
Tetrahydrofuran	ND		10		ug/L			03/26/13 05:46	1
Toluene	ND		1.0		ug/L			03/26/13 05:46	1
trans-1,2-Dichloroethene	ND		1.0		ug/L			03/26/13 05:46	1
trans-1,3-Dichloropropene	ND		0.40		ug/L			03/26/13 05:46	1
Trichloroethene	ND		1.0		ug/L			03/26/13 05:46	1
Trichlorofluoromethane	ND		1.0		ug/L			03/26/13 05:46	1
Vinyl chloride	ND		0.50		ug/L			03/26/13 05:46	1
Dibromomethane	ND		1.0		ug/L			03/26/13 05:46	1

Surrogate	*%Recovery*	*Qualifier*	*Limits*	*Prepared*	*Analyzed*	*Dil Fac*
Toluene-d8 (Surr)	*95*		*70 - 130*		*03/26/13 05:46*	*1*
1,2-Dichloroethane-d4 (Surr)	*94*		*70 - 130*		*03/26/13 05:46*	*1*
4-Bromofluorobenzene (Surr)	*100*		*70 - 130*		*03/26/13 05:46*	*1*

Client Sample ID: MW1002B-20130322-01

Lab Sample ID: 480-34934-7

Date Collected: 03/22/13 10:30

Matrix: Water

Date Received: 03/23/13 08:30

Method: 8260C - Volatile Organic Compounds (GC/MS)

Analyte	Result	Qualifier	RL	MDL	Unit	D	Prepared	Analyzed	Dil Fac
1,1,1,2-Tetrachloroethane	ND		1.0		ug/L			03/26/13 06:10	1
1,1,1-Trichloroethane	ND		1.0		ug/L			03/26/13 06:10	1
1,1,2,2-Tetrachloroethane	ND		0.50		ug/L			03/26/13 06:10	1
1,1,2-Trichloroethane	ND		1.0		ug/L			03/26/13 06:10	1
1,1-Dichloroethane	ND		1.0		ug/L			03/26/13 06:10	1
1,1-Dichloroethene	ND		1.0		ug/L			03/26/13 06:10	1
1,1-Dichloropropene	ND		1.0		ug/L			03/26/13 06:10	1
1,2,3-Trichlorobenzene	ND		1.0		ug/L			03/26/13 06:10	1
1,2,3-Trichloropropane	ND		1.0		ug/L			03/26/13 06:10	1
1,2,4-Trichlorobenzene	ND		1.0		ug/L			03/26/13 06:10	1
1,2,4-Trimethylbenzene	ND		1.0		ug/L			03/26/13 06:10	1
1,2-Dibromo-3-Chloropropane	ND		5.0		ug/L			03/26/13 06:10	1
1,2-Dichlorobenzene	ND		1.0		ug/L			03/26/13 06:10	1
1,2-Dichloroethane	ND		1.0		ug/L			03/26/13 06:10	1
1,2-Dichloropropane	ND		1.0		ug/L			03/26/13 06:10	1
1,3,5-Trimethylbenzene	ND		1.0		ug/L			03/26/13 06:10	1
1,3-Dichlorobenzene	ND		1.0		ug/L			03/26/13 06:10	1
1,3-Dichloropropane	ND		1.0		ug/L			03/26/13 06:10	1
1,4-Dichlorobenzene	ND		1.0		ug/L			03/26/13 06:10	1
1,4-Dioxane	ND		50		ug/L			03/26/13 06:10	1
2,2-Dichloropropane	ND		1.0		ug/L			03/26/13 06:10	1

Client Sample ID: MW1002B-20130322-01
Date Collected: 03/22/13 10:30
Date Received: 03/23/13 08:30

Lab Sample ID: 480-34934-7
Matrix: Water

Method: 8260C - Volatile Organic Compounds (GC/MS) (Continued)

Analyte	Result	Qualifier	RL	MDL	Unit	D	Prepared	Analyzed	Dil Fac
2-Butanone (MEK)	ND		10		ug/L			03/26/13 06:10	1
2-Chlorotoluene	ND		1.0		ug/L			03/26/13 06:10	1
2-Hexanone	ND		10		ug/L			03/26/13 06:10	1
4-Chlorotoluene	ND		1.0		ug/L			03/26/13 06:10	1
4-Isopropyltoluene	ND		1.0		ug/L			03/26/13 06:10	1
4-Methyl-2-pentanone (MIBK)	ND		10		ug/L			03/26/13 06:10	1
Acetone	ND		50		ug/L			03/26/13 06:10	1
Benzene	ND		1.0		ug/L			03/26/13 06:10	1
Bromobenzene	ND		1.0		ug/L			03/26/13 06:10	1
Bromoform	ND		1.0		ug/L			03/26/13 06:10	1
Bromomethane	ND		2.0		ug/L			03/26/13 06:10	1
Carbon disulfide	ND		10		ug/L			03/26/13 06:10	1
Carbon tetrachloride	ND		1.0		ug/L			03/26/13 06:10	1
Chlorobenzene	ND		1.0		ug/L			03/26/13 06:10	1
Chlorobromomethane	ND		1.0		ug/L			03/26/13 06:10	1
Chlorodibromomethane	ND		0.50		ug/L			03/26/13 06:10	1
Chloroethane	ND		2.0		ug/L			03/26/13 06:10	1
Chloroform	ND		1.0		ug/L			03/26/13 06:10	1
Chloromethane	ND		2.0		ug/L			03/26/13 06:10	1
cis-1,2-Dichloroethene	ND		1.0		ug/L			03/26/13 06:10	1
cis-1,3-Dichloropropene	ND		0.40		ug/L			03/26/13 06:10	1
Dichlorobromomethane	ND		0.50		ug/L			03/26/13 06:10	1
Dichlorodifluoromethane	ND		1.0		ug/L			03/26/13 06:10	1
Ethyl ether	ND		1.0		ug/L			03/26/13 06:10	1
Ethylbenzene	ND		1.0		ug/L			03/26/13 06:10	1
Ethylene Dibromide	ND		1.0		ug/L			03/26/13 06:10	1
Hexachlorobutadiene	ND		0.40		ug/L			03/26/13 06:10	1
Isopropyl ether	ND		10		ug/L			03/26/13 06:10	1
Isopropylbenzene	ND		1.0		ug/L			03/26/13 06:10	1
Methyl tert-butyl ether	ND		1.0		ug/L			03/26/13 06:10	1
Methylene Chloride	ND		1.0		ug/L			03/26/13 06:10	1
m-Xylene & p-Xylene	ND		2.0		ug/L			03/26/13 06:10	1
Naphthalene	ND		5.0		ug/L			03/26/13 06:10	1
n-Butylbenzene	ND		1.0		ug/L			03/26/13 06:10	1
N-Propylbenzene	ND		1.0		ug/L			03/26/13 06:10	1
o-Xylene	ND		1.0		ug/L			03/26/13 06:10	1
sec-Butylbenzene	ND		1.0		ug/L			03/26/13 06:10	1
Styrene	ND		1.0		ug/L			03/26/13 06:10	1
Tert-amyl methyl ether	ND		5.0		ug/L			03/26/13 06:10	1
Tert-butyl ethyl ether	ND		5.0		ug/L			03/26/13 06:10	1
tert-Butylbenzene	ND		1.0		ug/L			03/26/13 06:10	1
Tetrachloroethene	ND		1.0		ug/L			03/26/13 06:10	1
Tetrahydrofuran	ND		10		ug/L			03/26/13 06:10	1
Toluene	ND		1.0		ug/L			03/26/13 06:10	1
trans-1,2-Dichloroethene	ND		1.0		ug/L			03/26/13 06:10	1
trans-1,3-Dichloropropene	ND		0.40		ug/L			03/26/13 06:10	1
Trichloroethene	ND		1.0		ug/L			03/26/13 06:10	1
Trichlorofluoromethane	ND		1.0		ug/L			03/26/13 06:10	1
Vinyl chloride	ND		0.50		ug/L			03/26/13 06:10	1

Client Sample ID: MW1002B-20130322-01

Lab Sample ID: 480-34934-7

Date Collected: 03/22/13 10:30

Matrix: Water

Date Received: 03/23/13 08:30

Method: 8260C - Volatile Organic Compounds (GC/MS) (Continued)

Analyte	Result	Qualifier	RL	MDL	Unit	D	Prepared	Analyzed	Dil Fac
Dibromomethane	ND		1.0		ug/L			03/26/13 06:10	1

Surrogate	*%Recovery*	*Qualifier*	*Limits*	*Prepared*	*Analyzed*	*Dil Fac*
Toluene-d8 (Surr)	*96*		*70 - 130*		*03/26/13 06:10*	*1*
1,2-Dichloroethane-d4 (Surr)	*93*		*70 - 130*		*03/26/13 06:10*	*1*
4-Bromofluorobenzene (Surr)	*101*		*70 - 130*		*03/26/13 06:10*	*1*

Client Sample ID: MW1002M-20130322-01

Lab Sample ID: 480-34934-8

Date Collected: 03/22/13 08:45

Matrix: Water

Date Received: 03/23/13 08:30

Method: 8260C - Volatile Organic Compounds (GC/MS)

Analyte	Result	Qualifier	RL	MDL	Unit	D	Prepared	Analyzed	Dil Fac
1,1,1,2-Tetrachloroethane	ND		1.0		ug/L			03/26/13 06:34	1
1,1,1-Trichloroethane	ND		1.0		ug/L			03/26/13 06:34	1
1,1,2,2-Tetrachloroethane	ND		0.50		ug/L			03/26/13 06:34	1
1,1,2-Trichloroethane	ND		1.0		ug/L			03/26/13 06:34	1
1,1-Dichloroethane	ND		1.0		ug/L			03/26/13 06:34	1
1,1-Dichloroethene	ND		1.0		ug/L			03/26/13 06:34	1
1,1-Dichloropropene	ND		1.0		ug/L			03/26/13 06:34	1
1,2,3-Trichlorobenzene	ND		1.0		ug/L			03/26/13 06:34	1
1,2,3-Trichloropropane	ND		1.0		ug/L			03/26/13 06:34	1
1,2,4-Trichlorobenzene	ND		1.0		ug/L			03/26/13 06:34	1
1,2,4-Trimethylbenzene	ND		1.0		ug/L			03/26/13 06:34	1
1,2-Dibromo-3-Chloropropane	ND		5.0		ug/L			03/26/13 06:34	1
1,2-Dichlorobenzene	ND		1.0		ug/L			03/26/13 06:34	1
1,2-Dichloroethane	ND		1.0		ug/L			03/26/13 06:34	1
1,2-Dichloropropane	ND		1.0		ug/L			03/26/13 06:34	1
1,3,5-Trimethylbenzene	ND		1.0		ug/L			03/26/13 06:34	1
1,3-Dichlorobenzene	ND		1.0		ug/L			03/26/13 06:34	1
1,3-Dichloropropane	ND		1.0		ug/L			03/26/13 06:34	1
1,4-Dichlorobenzene	ND		1.0		ug/L			03/26/13 06:34	1
1,4-Dioxane	ND		50		ug/L			03/26/13 06:34	1
2,2-Dichloropropane	ND		1.0		ug/L			03/26/13 06:34	1
2-Butanone (MEK)	ND		10		ug/L			03/26/13 06:34	1
2-Chlorotoluene	ND		1.0		ug/L			03/26/13 06:34	1
2-Hexanone	ND		10		ug/L			03/26/13 06:34	1
4-Chlorotoluene	ND		1.0		ug/L			03/26/13 06:34	1
4-Isopropyltoluene	ND		1.0		ug/L			03/26/13 06:34	1
4-Methyl-2-pentanone (MIBK)	ND		10		ug/L			03/26/13 06:34	1
Acetone	ND		50		ug/L			03/26/13 06:34	1
Benzene	ND		1.0		ug/L			03/26/13 06:34	1
Bromobenzene	ND		1.0		ug/L			03/26/13 06:34	1
Bromoform	ND		1.0		ug/L			03/26/13 06:34	1
Bromomethane	ND		2.0		ug/L			03/26/13 06:34	1
Carbon disulfide	ND		10		ug/L			03/26/13 06:34	1
Carbon tetrachloride	ND		1.0		ug/L			03/26/13 06:34	1
Chlorobenzene	ND		1.0		ug/L			03/26/13 06:34	1
Chlorobromomethane	ND		1.0		ug/L			03/26/13 06:34	1
Chlorodibromomethane	ND		0.50		ug/L			03/26/13 06:34	1

Client Sample ID: MW1002M-20130322-01

Lab Sample ID: 480-34934-8

Date Collected: 03/22/13 08:45

Matrix: Water

Date Received: 03/23/13 08:30

Method: 8260C - Volatile Organic Compounds (GC/MS) (Continued)

Analyte	Result	Qualifier	RL	MDL	Unit	D	Prepared	Analyzed	Dil Fac
Chloroethane	ND		2.0		ug/L			03/26/13 06:34	1
Chloroform	ND		1.0		ug/L			03/26/13 06:34	1
Chloromethane	ND		2.0		ug/L			03/26/13 06:34	1
cis-1,2-Dichloroethene	ND		1.0		ug/L			03/26/13 06:34	1
cis-1,3-Dichloropropene	ND		0.40		ug/L			03/26/13 06:34	1
Dichlorobromomethane	ND		0.50		ug/L			03/26/13 06:34	1
Dichlorodifluoromethane	ND		1.0		ug/L			03/26/13 06:34	1
Ethyl ether	ND		1.0		ug/L			03/26/13 06:34	1
Ethylbenzene	ND		1.0		ug/L			03/26/13 06:34	1
Ethylene Dibromide	ND		1.0		ug/L			03/26/13 06:34	1
Hexachlorobutadiene	ND		0.40		ug/L			03/26/13 06:34	1
Isopropyl ether	ND		10		ug/L			03/26/13 06:34	1
Isopropylbenzene	ND		1.0		ug/L			03/26/13 06:34	1
Methyl tert-butyl ether	ND		1.0		ug/L			03/26/13 06:34	1
Methylene Chloride	ND		1.0		ug/L			03/26/13 06:34	1
m-Xylene & p-Xylene	ND		2.0		ug/L			03/26/13 06:34	1
Naphthalene	ND		5.0		ug/L			03/26/13 06:34	1
n-Butylbenzene	ND		1.0		ug/L			03/26/13 06:34	1
N-Propylbenzene	ND		1.0		ug/L			03/26/13 06:34	1
o-Xylene	ND		1.0		ug/L			03/26/13 06:34	1
sec-Butylbenzene	ND		1.0		ug/L			03/26/13 06:34	1
Styrene	ND		1.0		ug/L			03/26/13 06:34	1
Tert-amyl methyl ether	ND		5.0		ug/L			03/26/13 06:34	1
Tert-butyl ethyl ether	ND		5.0		ug/L			03/26/13 06:34	1
tert-Butylbenzene	ND		1.0		ug/L			03/26/13 06:34	1
Tetrachloroethene	ND		1.0		ug/L			03/26/13 06:34	1
Tetrahydrofuran	ND		10		ug/L			03/26/13 06:34	1
Toluene	ND		1.0		ug/L			03/26/13 06:34	1
trans-1,2-Dichloroethene	ND		1.0		ug/L			03/26/13 06:34	1
trans-1,3-Dichloropropene	ND		0.40		ug/L			03/26/13 06:34	1
Trichloroethene	ND		1.0		ug/L			03/26/13 06:34	1
Trichlorofluoromethane	ND		1.0		ug/L			03/26/13 06:34	1
Vinyl chloride	ND		0.50		ug/L			03/26/13 06:34	1
Dibromomethane	ND		1.0		ug/L			03/26/13 06:34	1

Surrogate	*%Recovery*	*Qualifier*	*Limits*	*Prepared*	*Analyzed*	*Dil Fac*
Toluene-d8 (Surr)	*96*		*70 - 130*		*03/26/13 06:34*	*1*
1,2-Dichloroethane-d4 (Surr)	*95*		*70 - 130*		*03/26/13 06:34*	*1*
4-Bromofluorobenzene (Surr)	*101*		*70 - 130*		*03/26/13 06:34*	*1*

Client Sample ID: TB003-20130322-01

Lab Sample ID: 480-34934-9

Date Collected: 03/22/13 00:00

Matrix: Water

Date Received: 03/23/13 08:30

Method: 8260C - Volatile Organic Compounds (GC/MS)

Analyte	Result	Qualifier	RL	MDL	Unit	D	Prepared	Analyzed	Dil Fac
1,1,1,2-Tetrachloroethane	ND		1.0		ug/L			03/26/13 06:58	1
1,1,1-Trichloroethane	ND		1.0		ug/L			03/26/13 06:58	1
1,1,2,2-Tetrachloroethane	ND		0.50		ug/L			03/26/13 06:58	1
1,1,2-Trichloroethane	ND		1.0		ug/L			03/26/13 06:58	1

Client Sample ID: TB003-20130322-01
Date Collected: 03/22/13 00:00
Date Received: 03/23/13 08:30

Lab Sample ID: 480-34934-9
Matrix: Water

Method: 8260C - Volatile Organic Compounds (GC/MS) (Continued)

Analyte	Result	Qualifier	RL	MDL	Unit	D	Prepared	Analyzed	Dil Fac
1,1-Dichloroethane	ND		1.0		ug/L			03/26/13 06:58	1
1,1-Dichloroethene	ND		1.0		ug/L			03/26/13 06:58	1
1,1-Dichloropropene	ND		1.0		ug/L			03/26/13 06:58	1
1,2,3-Trichlorobenzene	ND		1.0		ug/L			03/26/13 06:58	1
1,2,3-Trichloropropane	ND		1.0		ug/L			03/26/13 06:58	1
1,2,4-Trichlorobenzene	ND		1.0		ug/L			03/26/13 06:58	1
1,2,4-Trimethylbenzene	ND		1.0		ug/L			03/26/13 06:58	1
1,2-Dibromo-3-Chloropropane	ND		5.0		ug/L			03/26/13 06:58	1
1,2-Dichlorobenzene	ND		1.0		ug/L			03/26/13 06:58	1
1,2-Dichloroethane	ND		1.0		ug/L			03/26/13 06:58	1
1,2-Dichloropropane	ND		1.0		ug/L			03/26/13 06:58	1
1,3,5-Trimethylbenzene	ND		1.0		ug/L			03/26/13 06:58	1
1,3-Dichlorobenzene	ND		1.0		ug/L			03/26/13 06:58	1
1,3-Dichloropropane	ND		1.0		ug/L			03/26/13 06:58	1
1,4-Dichlorobenzene	ND		1.0		ug/L			03/26/13 06:58	1
1,4-Dioxane	ND		50		ug/L			03/26/13 06:58	1
2,2-Dichloropropane	ND		1.0		ug/L			03/26/13 06:58	1
2-Butanone (MEK)	ND		10		ug/L			03/26/13 06:58	1
2-Chlorotoluene	ND		1.0		ug/L			03/26/13 06:58	1
2-Hexanone	ND		10		ug/L			03/26/13 06:58	1
4-Chlorotoluene	ND		1.0		ug/L			03/26/13 06:58	1
4-Isopropyltoluene	ND		1.0		ug/L			03/26/13 06:58	1
4-Methyl-2-pentanone (MIBK)	ND		10		ug/L			03/26/13 06:58	1
Acetone	ND		50		ug/L			03/26/13 06:58	1
Benzene	ND		1.0		ug/L			03/26/13 06:58	1
Bromobenzene	ND		1.0		ug/L			03/26/13 06:58	1
Bromoform	ND		1.0		ug/L			03/26/13 06:58	1
Bromomethane	ND		2.0		ug/L			03/26/13 06:58	1
Carbon disulfide	ND		10		ug/L			03/26/13 06:58	1
Carbon tetrachloride	ND		1.0		ug/L			03/26/13 06:58	1
Chlorobenzene	ND		1.0		ug/L			03/26/13 06:58	1
Chlorobromomethane	ND		1.0		ug/L			03/26/13 06:58	1
Chlorodibromomethane	ND		0.50		ug/L			03/26/13 06:58	1
Chloroethane	ND		2.0		ug/L			03/26/13 06:58	1
Chloroform	ND		1.0		ug/L			03/26/13 06:58	1
Chloromethane	ND		2.0		ug/L			03/26/13 06:58	1
cis-1,2-Dichloroethene	ND		1.0		ug/L			03/26/13 06:58	1
cis-1,3-Dichloropropene	ND		0.40		ug/L			03/26/13 06:58	1
Dichlorobromomethane	ND		0.50		ug/L			03/26/13 06:58	1
Dichlorodifluoromethane	ND		1.0		ug/L			03/26/13 06:58	1
Ethyl ether	ND		1.0		ug/L			03/26/13 06:58	1
Ethylbenzene	ND		1.0		ug/L			03/26/13 06:58	1
Ethylene Dibromide	ND		1.0		ug/L			03/26/13 06:58	1
Hexachlorobutadiene	ND		0.40		ug/L			03/26/13 06:58	1
Isopropyl ether	ND		10		ug/L			03/26/13 06:58	1
Isopropylbenzene	ND		1.0		ug/L			03/26/13 06:58	1
Methyl tert-butyl ether	ND		1.0		ug/L			03/26/13 06:58	1
Methylene Chloride	ND		1.0		ug/L			03/26/13 06:58	1
m-Xylene & p-Xylene	ND		2.0		ug/L			03/26/13 06:58	1

Client Sample Results

Client: ERM-Northeast
Project/Site: IDS Wayland

TestAmerica Job ID: 480-34934-1

Client Sample ID: TB003-20130322-01

Lab Sample ID: 480-34934-9

Date Collected: 03/22/13 00:00
Matrix: Water
Date Received: 03/23/13 08:30

Method: 8260C - Volatile Organic Compounds (GC/MS) (Continued)

Analyte	Result	Qualifier	RL	MDL	Unit	D	Prepared	Analyzed	Dil Fac
Naphthalene	ND		5.0		ug/L			03/26/13 06:58	1
n-Butylbenzene	ND		1.0		ug/L			03/26/13 06:58	1
N-Propylbenzene	ND		1.0		ug/L			03/26/13 06:58	1
o-Xylene	ND		1.0		ug/L			03/26/13 06:58	1
sec-Butylbenzene	ND		1.0		ug/L			03/26/13 06:58	1
Styrene	ND		1.0		ug/L			03/26/13 06:58	1
Tert-amyl methyl ether	ND		5.0		ug/L			03/26/13 06:58	1
Tert-butyl ethyl ether	ND		5.0		ug/L			03/26/13 06:58	1
tert-Butylbenzene	ND		1.0		ug/L			03/26/13 06:58	1
Tetrachloroethene	ND		1.0		ug/L			03/26/13 06:58	1
Tetrahydrofuran	ND		10		ug/L			03/26/13 06:58	1
Toluene	ND		1.0		ug/L			03/26/13 06:58	1
trans-1,2-Dichloroethene	ND		1.0		ug/L			03/26/13 06:58	1
trans-1,3-Dichloropropene	ND		0.40		ug/L			03/26/13 06:58	1
Trichloroethene	ND		1.0		ug/L			03/26/13 06:58	1
Trichlorofluoromethane	ND		1.0		ug/L			03/26/13 06:58	1
Vinyl chloride	ND		0.50		ug/L			03/26/13 06:58	1
Dibromomethane	ND		1.0		ug/L			03/26/13 06:58	1

Surrogate	*%Recovery*	*Qualifier*	*Limits*	*Prepared*	*Analyzed*	*Dil Fac*
Toluene-d8 (Surr)	*93*		*70 - 130*		*03/26/13 06:58*	*1*
1,2-Dichloroethane-d4 (Surr)	*93*		*70 - 130*		*03/26/13 06:58*	*1*
4-Bromofluorobenzene (Surr)	*97*		*70 - 130*		*03/26/13 06:58*	*1*

Surrogate Summary

Client: ERM-Northeast
Project/Site: IDS Wayland

TestAmerica Job ID: 480-34934-1

Method: 8260B SIM - Volatile Organic Compounds (GC/MS)

Matrix: Water **Prep Type: Total/NA**

		Percent Surrogate Recovery (Acceptance Limits)	
		BA-d9 (Sur	DBFM
Lab Sample ID	Client Sample ID	(50-150)	(50-150)
480-34934-1	MW1024D-20130322-01	120	88
480-34934-5	MW1026D-20130322-01	125	93
LCS 480-109279/3	Lab Control Sample	131	87
LCSD 480-109279/4	Lab Control Sample Dup	125	87
MB 480-109279/5	Method Blank	135	86

Surrogate Legend

TBA-d9 (Surr) = TBA-d9 (Surr)

DBFM = Dibromofluoromethane (Surr)

Method: 8260C - Volatile Organic Compounds (GC/MS)

Matrix: Water **Prep Type: Total/NA**

		Percent Surrogate Recovery (Acceptance Limits)		
		TOL	12DCE	BFB
Lab Sample ID	Client Sample ID	(70-130)	(70-130)	(70-130)
480-34934-1	MW1024D-20130322-01	96	93	101
480-34934-2	MW1016D-20130322-01	96	96	101
480-34934-2 MS	MW1016D-20130322-01	97	93	101
480-34934-2 MSD	MW1016D-20130322-01	96	90	102
480-34934-3	MW1003-20130322-01	97	93	102
480-34934-4	MW1014-20130322-01	96	93	100
480-34934-5	MW1026D-20130322-01	96	93	99
480-34934-6	MW1013-20130322-01	95	94	100
480-34934-7	MW1002B-20130322-01	96	93	101
480-34934-8	MW1002M-20130322-01	96	95	101
480-34934-9	TB003-20130322-01	93	93	97
LCS 480-108964/4	Lab Control Sample	96	90	102
LCS 480-109114/4	Lab Control Sample	97	91	102
LCSD 480-108964/5	Lab Control Sample Dup	96	92	102
LCSD 480-109114/5	Lab Control Sample Dup	96	91	100
MB 480-108964/7	Method Blank	96	94	99
MB 480-109114/7	Method Blank	97	93	99

Surrogate Legend

TOL = Toluene-d8 (Surr)

12DCE = 1,2-Dichloroethane-d4 (Surr)

BFB = 4-Bromofluorobenzene (Surr)

Method: 522 MOD - 1,4 Dioxane (GC/MS SIM)

Matrix: Water **Prep Type: Total/NA**

		Percent Surrogate Recovery (Acceptance Limits)
		14DD8
Lab Sample ID	Client Sample ID	(70-130)
480-34934-1	MW1024D-20130322-01	76
480-34934-5	MW1026D-20130322-01	87
LCS 200-53504/2-A	Lab Control Sample	84
MB 200-53504/1-A	Method Blank	79

Surrogate Summary

Client: ERM-Northeast
Project/Site: IDS Wayland

TestAmerica Job ID: 480-34934-1

Surrogate Legend

14DD8 = 1,4-Dioxane-d8 (Surr)

Method: 8260B SIM - Volatile Organic Compounds (GC/MS)

Lab Sample ID: MB 480-109279/5 — **Client Sample ID: Method Blank**
Matrix: Water — **Prep Type: Total/NA**
Analysis Batch: 109279

Analyte	MB Result	MB Qualifier	RL	MDL	Unit	D	Prepared	Analyzed	Dil Fac
1,4-Dioxane	ND		1.6		ug/L			03/26/13 16:27	1

Surrogate	*MB %Recovery*	*MB Qualifier*	*Limits*	*Prepared*	*Analyzed*	*Dil Fac*
TBA-d9 (Surr)	*135*		*50 - 150*		*03/26/13 16:27*	*1*
Dibromofluoromethane (Surr)	*86*		*50 - 150*		*03/26/13 16:27*	*1*

Lab Sample ID: LCS 480-109279/3 — **Client Sample ID: Lab Control Sample**
Matrix: Water — **Prep Type: Total/NA**
Analysis Batch: 109279

Analyte	Spike Added	LCS Result	LCS Qualifier	Unit	D	%Rec	%Rec. Limits
1,4-Dioxane	16.0	22.6		ug/L		141	

Surrogate	*LCS %Recovery*	*LCS Qualifier*	*Limits*
TBA-d9 (Surr)	*131*		*50 - 150*
Dibromofluoromethane (Surr)	*87*		*50 - 150*

Lab Sample ID: LCSD 480-109279/4 — **Client Sample ID: Lab Control Sample Dup**
Matrix: Water — **Prep Type: Total/NA**
Analysis Batch: 109279

Analyte	Spike Added	LCSD Result	LCSD Qualifier	Unit	D	%Rec	%Rec. Limits	RPD	RPD Limit
1,4-Dioxane	16.0	22.9		ug/L		143		1	

Surrogate	*LCSD %Recovery*	*LCSD Qualifier*	*Limits*
TBA-d9 (Surr)	*125*		*50 - 150*
Dibromofluoromethane (Surr)	*87*		*50 - 150*

Method: 8260C - Volatile Organic Compounds (GC/MS)

Lab Sample ID: MB 480-108964/7 — **Client Sample ID: Method Blank**
Matrix: Water — **Prep Type: Total/NA**
Analysis Batch: 108964

Analyte	MB Result	MB Qualifier	RL	MDL	Unit	D	Prepared	Analyzed	Dil Fac
1,1,1,2-Tetrachloroethane	ND		1.0		ug/L			03/25/13 11:16	1
1,1,1-Trichloroethane	ND		1.0		ug/L			03/25/13 11:16	1
1,1,2,2-Tetrachloroethane	ND		0.50		ug/L			03/25/13 11:16	1
1,1,2-Trichloroethane	ND		1.0		ug/L			03/25/13 11:16	1
1,1-Dichloroethane	ND		1.0		ug/L			03/25/13 11:16	1
1,1-Dichloroethene	ND		1.0		ug/L			03/25/13 11:16	1
1,1-Dichloropropene	ND		1.0		ug/L			03/25/13 11:16	1
1,2,3-Trichlorobenzene	ND		1.0		ug/L			03/25/13 11:16	1
1,2,3-Trichloropropane	ND		1.0		ug/L			03/25/13 11:16	1
1,2,4-Trichlorobenzene	ND		1.0		ug/L			03/25/13 11:16	1
1,2,4-Trimethylbenzene	ND		1.0		ug/L			03/25/13 11:16	1
1,2-Dibromo-3-Chloropropane	ND		5.0		ug/L			03/25/13 11:16	1

Method: 8260C - Volatile Organic Compounds (GC/MS) (Continued)

Lab Sample ID: MB 480-108964/7
Matrix: Water
Analysis Batch: 108964

Client Sample ID: Method Blank
Prep Type: Total/NA

Analyte	MB Result	MB Qualifier	RL	MDL	Unit	D	Prepared	Analyzed	Dil Fac
1,2-Dichlorobenzene	ND		1.0		ug/L			03/25/13 11:16	1
1,2-Dichloroethane	ND		1.0		ug/L			03/25/13 11:16	1
1,2-Dichloropropane	ND		1.0		ug/L			03/25/13 11:16	1
1,3,5-Trimethylbenzene	ND		1.0		ug/L			03/25/13 11:16	1
1,3-Dichlorobenzene	ND		1.0		ug/L			03/25/13 11:16	1
1,3-Dichloropropane	ND		1.0		ug/L			03/25/13 11:16	1
1,4-Dichlorobenzene	ND		1.0		ug/L			03/25/13 11:16	1
1,4-Dioxane	ND		50		ug/L			03/25/13 11:16	1
2,2-Dichloropropane	ND		1.0		ug/L			03/25/13 11:16	1
2-Butanone (MEK)	ND		10		ug/L			03/25/13 11:16	1
2-Chlorotoluene	ND		1.0		ug/L			03/25/13 11:16	1
2-Hexanone	ND		10		ug/L			03/25/13 11:16	1
4-Chlorotoluene	ND		1.0		ug/L			03/25/13 11:16	1
4-Isopropyltoluene	ND		1.0		ug/L			03/25/13 11:16	1
4-Methyl-2-pentanone (MIBK)	ND		10		ug/L			03/25/13 11:16	1
Acetone	ND		50		ug/L			03/25/13 11:16	1
Benzene	ND		1.0		ug/L			03/25/13 11:16	1
Bromobenzene	ND		1.0		ug/L			03/25/13 11:16	1
Bromoform	ND		1.0		ug/L			03/25/13 11:16	1
Bromomethane	ND		2.0		ug/L			03/25/13 11:16	1
Carbon disulfide	ND		10		ug/L			03/25/13 11:16	1
Carbon tetrachloride	ND		1.0		ug/L			03/25/13 11:16	1
Chlorobenzene	ND		1.0		ug/L			03/25/13 11:16	1
Chlorobromomethane	ND		1.0		ug/L			03/25/13 11:16	1
Chlorodibromomethane	ND		0.50		ug/L			03/25/13 11:16	1
Chloroethane	ND		2.0		ug/L			03/25/13 11:16	1
Chloroform	ND		1.0		ug/L			03/25/13 11:16	1
Chloromethane	ND		2.0		ug/L			03/25/13 11:16	1
cis-1,2-Dichloroethene	ND		1.0		ug/L			03/25/13 11:16	1
cis-1,3-Dichloropropene	ND		0.40		ug/L			03/25/13 11:16	1
Dichlorobromomethane	ND		0.50		ug/L			03/25/13 11:16	1
Dichlorodifluoromethane	ND		1.0		ug/L			03/25/13 11:16	1
Ethyl ether	ND		1.0		ug/L			03/25/13 11:16	1
Ethylbenzene	ND		1.0		ug/L			03/25/13 11:16	1
Ethylene Dibromide	ND		1.0		ug/L			03/25/13 11:16	1
Hexachlorobutadiene	ND		0.40		ug/L			03/25/13 11:16	1
Isopropyl ether	ND		10		ug/L			03/25/13 11:16	1
Isopropylbenzene	ND		1.0		ug/L			03/25/13 11:16	1
Methyl tert-butyl ether	ND		1.0		ug/L			03/25/13 11:16	1
Methylene Chloride	ND		1.0		ug/L			03/25/13 11:16	1
m-Xylene & p-Xylene	ND		2.0		ug/L			03/25/13 11:16	1
Naphthalene	ND		5.0		ug/L			03/25/13 11:16	1
n-Butylbenzene	ND		1.0		ug/L			03/25/13 11:16	1
N-Propylbenzene	ND		1.0		ug/L			03/25/13 11:16	1
o-Xylene	ND		1.0		ug/L			03/25/13 11:16	1
sec-Butylbenzene	ND		1.0		ug/L			03/25/13 11:16	1
Styrene	ND		1.0		ug/L			03/25/13 11:16	1
Tert-amyl methyl ether	ND		5.0		ug/L			03/25/13 11:16	1

Method: 8260C - Volatile Organic Compounds (GC/MS) (Continued)

Lab Sample ID: MB 480-108964/7
Matrix: Water
Analysis Batch: 108964

Client Sample ID: Method Blank
Prep Type: Total/NA

Analyte	MB Result	MB Qualifier	RL	MDL	Unit	D	Prepared	Analyzed	Dil Fac
Tert-butyl ethyl ether	ND		5.0		ug/L			03/25/13 11:16	1
tert-Butylbenzene	ND		1.0		ug/L			03/25/13 11:16	1
Tetrachloroethene	ND		1.0		ug/L			03/25/13 11:16	1
Tetrahydrofuran	ND		10		ug/L			03/25/13 11:16	1
Toluene	ND		1.0		ug/L			03/25/13 11:16	1
trans-1,2-Dichloroethene	ND		1.0		ug/L			03/25/13 11:16	1
trans-1,3-Dichloropropene	ND		0.40		ug/L			03/25/13 11:16	1
Trichloroethene	ND		1.0		ug/L			03/25/13 11:16	1
Trichlorofluoromethane	ND		1.0		ug/L			03/25/13 11:16	1
Vinyl chloride	ND		0.50		ug/L			03/25/13 11:16	1
Dibromomethane	ND		1.0		ug/L			03/25/13 11:16	1

Surrogate	*MB %Recovery*	*MB Qualifier*	*Limits*	*Prepared*	*Analyzed*	*Dil Fac*
Toluene-d8 (Surr)	*96*		*70 - 130*		*03/25/13 11:16*	*1*
1,2-Dichloroethane-d4 (Surr)	*94*		*70 - 130*		*03/25/13 11:16*	*1*
4-Bromofluorobenzene (Surr)	*99*		*70 - 130*		*03/25/13 11:16*	*1*

Lab Sample ID: LCS 480-108964/4
Matrix: Water
Analysis Batch: 108964

Client Sample ID: Lab Control Sample
Prep Type: Total/NA

Analyte	Spike Added	LCS Result	LCS Qualifier	Unit	D	%Rec	%Rec. Limits
1,1,1,2-Tetrachloroethane	25.0	25.4		ug/L		102	70 - 130
1,1,1-Trichloroethane	25.0	23.3		ug/L		93	70 - 130
1,1,2,2-Tetrachloroethane	25.0	25.2		ug/L		101	70 - 130
1,1,2-Trichloroethane	25.0	24.4		ug/L		98	70 - 130
1,1-Dichloroethane	25.0	24.0		ug/L		96	70 - 130
1,1-Dichloroethene	25.0	25.3		ug/L		101	70 - 130
1,1-Dichloropropene	25.0	24.8		ug/L		99	70 - 130
1,2,3-Trichlorobenzene	25.0	25.8		ug/L		103	70 - 130
1,2,3-Trichloropropane	25.0	25.3		ug/L		101	70 - 130
1,2,4-Trichlorobenzene	25.0	26.7		ug/L		107	70 - 130
1,2,4-Trimethylbenzene	25.0	24.5		ug/L		98	70 - 130
1,2-Dibromo-3-Chloropropane	25.0	27.4		ug/L		110	70 - 130
1,2-Dichlorobenzene	25.0	24.6		ug/L		98	70 - 130
1,2-Dichloroethane	25.0	22.7		ug/L		91	70 - 130
1,2-Dichloropropane	25.0	23.9		ug/L		96	70 - 130
1,3,5-Trimethylbenzene	25.0	24.1		ug/L		97	70 - 130
1,3-Dichlorobenzene	25.0	24.7		ug/L		99	70 - 130
1,3-Dichloropropane	25.0	23.7		ug/L		95	70 - 130
1,4-Dichlorobenzene	25.0	24.8		ug/L		99	70 - 130
1,4-Dioxane	1000	977		ug/L		98	70 - 130
2,2-Dichloropropane	25.0	22.9		ug/L		92	70 - 130
2-Butanone (MEK)	125	173	*	ug/L		138	70 - 130
2-Chlorotoluene	25.0	24.3		ug/L		97	70 - 130
2-Hexanone	125	118		ug/L		94	70 - 130
4-Chlorotoluene	25.0	21.5		ug/L		86	70 - 130
4-Isopropyltoluene	25.0	25.2		ug/L		101	70 - 130

Method: 8260C - Volatile Organic Compounds (GC/MS) (Continued)

Lab Sample ID: LCS 480-108964/4
Matrix: Water
Analysis Batch: 108964

Client Sample ID: Lab Control Sample
Prep Type: Total/NA

Analyte	Spike Added	LCS Result	LCS Qualifier	Unit	D	%Rec	%Rec. Limits
4-Methyl-2-pentanone (MIBK)	125	119		ug/L		95	70 - 130
Acetone	125	116		ug/L		92	70 - 130
Benzene	25.0	24.2		ug/L		97	70 - 130
Bromobenzene	25.0	24.6		ug/L		98	70 - 130
Bromoform	25.0	27.0		ug/L		108	70 - 130
Bromomethane	25.0	21.4		ug/L		86	70 - 130
Carbon disulfide	25.0	24.9		ug/L		100	70 - 130
Carbon tetrachloride	25.0	24.3		ug/L		97	70 - 130
Chlorobenzene	25.0	24.8		ug/L		99	70 - 130
Chlorobromomethane	25.0	26.4		ug/L		106	70 - 130
Chlorodibromomethane	25.0	26.2		ug/L		105	70 - 130
Chloroethane	25.0	23.1		ug/L		92	70 - 130
Chloroform	25.0	23.9		ug/L		96	70 - 130
Chloromethane	25.0	25.2		ug/L		101	70 - 130
cis-1,2-Dichloroethene	25.0	24.4		ug/L		98	70 - 130
cis-1,3-Dichloropropene	25.0	25.3		ug/L		101	70 - 130
Dichlorobromomethane	25.0	24.4		ug/L		98	70 - 130
Dichlorodifluoromethane	50.0	63.9		ug/L		128	70 - 130
Ethyl ether	25.0	25.1		ug/L		101	70 - 130
Ethylbenzene	25.0	23.8		ug/L		95	70 - 130
Ethylene Dibromide	25.0	24.9		ug/L		100	70 - 130
Hexachlorobutadiene	25.0	26.2		ug/L		105	70 - 130
Isopropyl ether	25.0	25.4		ug/L		102	70 - 130
Isopropylbenzene	25.0	24.1		ug/L		96	70 - 130
Methyl tert-butyl ether	25.0	24.8		ug/L		99	70 - 130
Methylene Chloride	25.0	22.9		ug/L		92	70 - 130
m-Xylene & p-Xylene	50.0	49.2		ug/L		98	70 - 130
Naphthalene	25.0	25.2		ug/L		101	70 - 130
n-Butylbenzene	25.0	24.5		ug/L		98	70 - 130
N-Propylbenzene	25.0	24.3		ug/L		97	70 - 130
o-Xylene	25.0	24.2		ug/L		97	70 - 130
sec-Butylbenzene	25.0	25.0		ug/L		100	70 - 130
Styrene	25.0	24.3		ug/L		97	70 - 130
Tert-amyl methyl ether	25.0	25.2		ug/L		101	70 - 130
Tert-butyl ethyl ether	25.0	24.5		ug/L		98	70 - 130
tert-Butylbenzene	25.0	25.5		ug/L		102	70 - 130
Tetrachloroethene	25.0	26.4		ug/L		105	70 - 130
Tetrahydrofuran	125	127		ug/L		101	70 - 130
Toluene	25.0	24.1		ug/L		96	70 - 130
trans-1,2-Dichloroethene	25.0	24.8		ug/L		99	70 - 130
trans-1,3-Dichloropropene	25.0	24.7		ug/L		99	70 - 130
Trichloroethene	25.0	25.1		ug/L		100	70 - 130
Trichlorofluoromethane	25.0	25.5		ug/L		102	70 - 130
Vinyl chloride	25.0	23.7		ug/L		95	70 - 130
Dibromomethane	25.0	24.6		ug/L		98	70 - 130

Surrogate	*LCS %Recovery*	*LCS Qualifier*	*Limits*
Toluene-d8 (Surr)	*96*		*70 - 130*

Method: 8260C - Volatile Organic Compounds (GC/MS) (Continued)

Lab Sample ID: LCS 480-108964/4
Matrix: Water
Analysis Batch: 108964

Client Sample ID: Lab Control Sample
Prep Type: Total/NA

Surrogate	*LCS %Recovery*	*LCS Qualifier*	*Limits*
1,2-Dichloroethane-d4 (Surr)	*90*		*70 - 130*
4-Bromofluorobenzene (Surr)	*102*		*70 - 130*

Lab Sample ID: LCSD 480-108964/5
Matrix: Water
Analysis Batch: 108964

Client Sample ID: Lab Control Sample Dup
Prep Type: Total/NA

Analyte	Spike Added	LCSD Result	LCSD Qualifier	Unit	D	%Rec	%Rec. Limits	RPD	RPD Limit
1,1,1,2-Tetrachloroethane	25.0	24.3		ug/L		97	70 - 130	4	20
1,1,1-Trichloroethane	25.0	23.0		ug/L		92	70 - 130	1	20
1,1,2,2-Tetrachloroethane	25.0	25.1		ug/L		100	70 - 130	0	20
1,1,2-Trichloroethane	25.0	23.5		ug/L		94	70 - 130	4	20
1,1-Dichloroethane	25.0	23.2		ug/L		93	70 - 130	3	20
1,1-Dichloroethene	25.0	23.2		ug/L		93	70 - 130	9	20
1,1-Dichloropropene	25.0	23.8		ug/L		95	70 - 130	4	20
1,2,3-Trichlorobenzene	25.0	26.5		ug/L		106	70 - 130	3	20
1,2,3-Trichloropropane	25.0	24.4		ug/L		98	70 - 130	4	20
1,2,4-Trichlorobenzene	25.0	26.8		ug/L		107	70 - 130	0	20
1,2,4-Trimethylbenzene	25.0	23.4		ug/L		94	70 - 130	4	20
1,2-Dibromo-3-Chloropropane	25.0	26.4		ug/L		105	70 - 130	4	20
1,2-Dichlorobenzene	25.0	24.5		ug/L		98	70 - 130	0	20
1,2-Dichloroethane	25.0	22.6		ug/L		90	70 - 130	0	20
1,2-Dichloropropane	25.0	24.0		ug/L		96	70 - 130	0	20
1,3,5-Trimethylbenzene	25.0	23.6		ug/L		94	70 - 130	2	20
1,3-Dichlorobenzene	25.0	24.4		ug/L		98	70 - 130	1	20
1,3-Dichloropropane	25.0	23.0		ug/L		92	70 - 130	3	20
1,4-Dichlorobenzene	25.0	24.6		ug/L		98	70 - 130	1	20
1,4-Dioxane	1000	992		ug/L		99	70 - 130	2	20
2,2-Dichloropropane	25.0	23.0		ug/L		92	70 - 130	0	20
2-Butanone (MEK)	125	172	*	ug/L		138	70 - 130	1	20
2-Chlorotoluene	25.0	23.5		ug/L		94	70 - 130	3	20
2-Hexanone	125	116		ug/L		93	70 - 130	2	20
4-Chlorotoluene	25.0	20.9		ug/L		83	70 - 130	3	20
4-Isopropyltoluene	25.0	24.3		ug/L		97	70 - 130	3	20
4-Methyl-2-pentanone (MIBK)	125	116		ug/L		93	70 - 130	2	20
Acetone	125	114		ug/L		92	70 - 130	1	20
Benzene	25.0	23.7		ug/L		95	70 - 130	2	20
Bromobenzene	25.0	24.3		ug/L		97	70 - 130	1	20
Bromoform	25.0	26.7		ug/L		107	70 - 130	1	20
Bromomethane	25.0	24.0		ug/L		96	70 - 130	11	20
Carbon disulfide	25.0	24.0		ug/L		96	70 - 130	4	20
Carbon tetrachloride	25.0	23.8		ug/L		95	70 - 130	2	20
Chlorobenzene	25.0	24.0		ug/L		96	70 - 130	3	20
Chlorobromomethane	25.0	25.6		ug/L		102	70 - 130	3	20
Chlorodibromomethane	25.0	25.1		ug/L		100	70 - 130	4	20
Chloroethane	25.0	23.4		ug/L		94	70 - 130	2	20
Chloroform	25.0	23.0		ug/L		92	70 - 130	4	20
Chloromethane	25.0	23.7		ug/L		95	70 - 130	6	20

Method: 8260C - Volatile Organic Compounds (GC/MS) (Continued)

Lab Sample ID: LCSD 480-108964/5
Matrix: Water
Analysis Batch: 108964

Client Sample ID: Lab Control Sample Dup
Prep Type: Total/NA

Analyte	Spike Added	LCSD Result	LCSD Qualifier	Unit	D	%Rec	%Rec. Limits	RPD	RPD Limit
cis-1,2-Dichloroethene	25.0	24.6		ug/L		98	70 - 130	1	20
cis-1,3-Dichloropropene	25.0	25.0		ug/L		100	70 - 130	1	20
Dichlorobromomethane	25.0	24.1		ug/L		96	70 - 130	1	20
Dichlorodifluoromethane	50.0	59.8		ug/L		120	70 - 130	7	20
Ethyl ether	25.0	25.0		ug/L		100	70 - 130	1	20
Ethylbenzene	25.0	23.0		ug/L		92	70 - 130	4	20
Ethylene Dibromide	25.0	24.3		ug/L		97	70 - 130	2	20
Hexachlorobutadiene	25.0	26.3		ug/L		105	70 - 130	0	20
Isopropyl ether	25.0	25.4		ug/L		102	70 - 130	0	20
Isopropylbenzene	25.0	23.5		ug/L		94	70 - 130	2	20
Methyl tert-butyl ether	25.0	24.7		ug/L		99	70 - 130	0	20
Methylene Chloride	25.0	22.7		ug/L		91	70 - 130	1	20
m-Xylene & p-Xylene	50.0	46.9		ug/L		94	70 - 130	5	20
Naphthalene	25.0	25.7		ug/L		103	70 - 130	2	20
n-Butylbenzene	25.0	23.8		ug/L		95	70 - 130	3	20
N-Propylbenzene	25.0	23.5		ug/L		94	70 - 130	4	20
o-Xylene	25.0	23.7		ug/L		95	70 - 130	2	20
sec-Butylbenzene	25.0	23.8		ug/L		95	70 - 130	5	20
Styrene	25.0	23.7		ug/L		95	70 - 130	2	20
Tert-amyl methyl ether	25.0	25.0		ug/L		100	70 - 130	1	20
Tert-butyl ethyl ether	25.0	24.2		ug/L		97	70 - 130	2	20
tert-Butylbenzene	25.0	24.8		ug/L		99	70 - 130	3	20
Tetrachloroethene	25.0	25.6		ug/L		102	70 - 130	3	20
Tetrahydrofuran	125	127		ug/L		102	70 - 130	1	20
Toluene	25.0	23.5		ug/L		94	70 - 130	2	20
trans-1,2-Dichloroethene	25.0	24.2		ug/L		97	70 - 130	3	20
trans-1,3-Dichloropropene	25.0	23.8		ug/L		95	70 - 130	4	20
Trichloroethene	25.0	24.3		ug/L		97	70 - 130	3	20
Trichlorofluoromethane	25.0	24.8		ug/L		99	70 - 130	3	20
Vinyl chloride	25.0	23.0		ug/L		92	70 - 130	3	20
Dibromomethane	25.0	24.8		ug/L		99	70 - 130	1	20

Surrogate	*LCSD %Recovery*	*LCSD Qualifier*	*Limits*
Toluene-d8 (Surr)	*96*		*70 - 130*
1,2-Dichloroethane-d4 (Surr)	*92*		*70 - 130*
4-Bromofluorobenzene (Surr)	*102*		*70 - 130*

Lab Sample ID: 480-34934-2 MS
Matrix: Water
Analysis Batch: 108964

Client Sample ID: MW1016D-20130322-01
Prep Type: Total/NA

Analyte	Sample Result	Sample Qualifier	Spike Added	MS Result	MS Qualifier	Unit	D	%Rec	%Rec. Limits
1,1,1,2-Tetrachloroethane	ND		25.0	23.4		ug/L		94	70 - 130
1,1,1-Trichloroethane	ND		25.0	23.9		ug/L		96	70 - 130
1,1,2,2-Tetrachloroethane	ND		25.0	23.3		ug/L		93	70 - 130
1,1,2-Trichloroethane	ND		25.0	23.5		ug/L		94	70 - 130
1,1-Dichloroethane	ND		25.0	23.7		ug/L		95	70 - 130
1,1-Dichloroethene	ND		25.0	23.0		ug/L		89	70 - 130

Method: 8260C - Volatile Organic Compounds (GC/MS) (Continued)

Lab Sample ID: 480-34934-2 MS
Matrix: Water
Analysis Batch: 108964

Client Sample ID: MW1016D-20130322-01
Prep Type: Total/NA

Analyte	Sample Result	Sample Qualifier	Spike Added	MS Result	MS Qualifier	Unit	D	%Rec	%Rec. Limits
1,1-Dichloropropene	ND		25.0	24.1		ug/L		96	70 - 130
1,2,3-Trichlorobenzene	ND		25.0	24.9		ug/L		100	70 - 130
1,2,3-Trichloropropane	ND		25.0	24.0		ug/L		96	70 - 130
1,2,4-Trichlorobenzene	ND		25.0	24.9		ug/L		100	70 - 130
1,2,4-Trimethylbenzene	ND		25.0	22.6		ug/L		90	70 - 130
1,2-Dibromo-3-Chloropropane	ND		25.0	24.0		ug/L		96	70 - 130
1,2-Dichlorobenzene	ND		25.0	23.3		ug/L		93	70 - 130
1,2-Dichloroethane	ND		25.0	21.9		ug/L		88	70 - 130
1,2-Dichloropropane	ND		25.0	22.9		ug/L		92	70 - 130
1,3,5-Trimethylbenzene	ND		25.0	23.0		ug/L		92	70 - 130
1,3-Dichlorobenzene	ND		25.0	23.1		ug/L		92	70 - 130
1,3-Dichloropropane	ND		25.0	22.5		ug/L		90	70 - 130
1,4-Dichlorobenzene	ND		25.0	23.2		ug/L		93	70 - 130
1,4-Dioxane	ND		1000	1240		ug/L		124	70 - 130
2,2-Dichloropropane	ND		25.0	19.5		ug/L		78	70 - 130
2-Butanone (MEK)	ND	*	125	171	F	ug/L		135	70 - 130
2-Chlorotoluene	ND		25.0	23.2		ug/L		93	70 - 130
2-Hexanone	ND		125	115		ug/L		92	70 - 130
4-Chlorotoluene	ND		25.0	19.9		ug/L		80	70 - 130
4-Isopropyltoluene	ND		25.0	23.6		ug/L		94	70 - 130
4-Methyl-2-pentanone (MIBK)	ND		125	115		ug/L		92	70 - 130
Acetone	ND		125	117		ug/L		94	70 - 130
Benzene	ND		25.0	23.4		ug/L		94	70 - 130
Bromobenzene	ND		25.0	23.3		ug/L		93	70 - 130
Bromoform	ND		25.0	20.8		ug/L		83	70 - 130
Bromomethane	ND		25.0	25.5		ug/L		102	70 - 130
Carbon disulfide	ND		25.0	25.0		ug/L		99	70 - 130
Carbon tetrachloride	ND		25.0	22.2		ug/L		89	70 - 130
Chlorobenzene	ND		25.0	24.0		ug/L		96	70 - 130
Chlorobromomethane	ND		25.0	25.0		ug/L		100	70 - 130
Chlorodibromomethane	ND		25.0	22.3		ug/L		89	70 - 130
Chloroethane	ND		25.0	27.3		ug/L		109	70 - 130
Chloroform	ND		25.0	22.6		ug/L		91	70 - 130
Chloromethane	ND		25.0	18.7		ug/L		75	70 - 130
cis-1,2-Dichloroethene	4.1		25.0	27.9		ug/L		95	70 - 130
cis-1,3-Dichloropropene	ND		25.0	22.0		ug/L		88	70 - 130
Dichlorobromomethane	ND		25.0	21.9		ug/L		87	70 - 130
Dichlorodifluoromethane	ND		50.0	71.3	F	ug/L		143	70 - 130
Ethyl ether	ND		25.0	27.8		ug/L		111	70 - 130
Ethylbenzene	ND		25.0	23.2		ug/L		93	70 - 130
Ethylene Dibromide	ND		25.0	23.2		ug/L		93	70 - 130
Hexachlorobutadiene	ND		25.0	22.8		ug/L		91	70 - 130
Isopropyl ether	ND		25.0	28.1		ug/L		112	70 - 130
Isopropylbenzene	ND		25.0	23.1		ug/L		93	70 - 130
Methyl tert-butyl ether	ND		25.0	23.2		ug/L		93	70 - 130
Methylene Chloride	ND		25.0	22.1		ug/L		88	70 - 130
m-Xylene & p-Xylene	ND		50.0	46.8		ug/L		94	70 - 130
Naphthalene	ND		25.0	24.5		ug/L		98	70 - 130

Method: 8260C - Volatile Organic Compounds (GC/MS) (Continued)

Lab Sample ID: 480-34934-2 MS
Matrix: Water
Analysis Batch: 108964

Client Sample ID: MW1016D-20130322-01
Prep Type: Total/NA

Analyte	Sample Result	Sample Qualifier	Spike Added	MS Result	MS Qualifier	Unit	D	%Rec	%Rec. Limits
n-Butylbenzene	ND		25.0	22.2		ug/L		89	70 - 130
N-Propylbenzene	ND		25.0	22.3		ug/L		89	70 - 130
o-Xylene	ND		25.0	23.4		ug/L		94	70 - 130
sec-Butylbenzene	ND		25.0	23.6		ug/L		94	70 - 130
Styrene	ND		25.0	16.5	F	ug/L		66	70 - 130
Tert-amyl methyl ether	ND		25.0	25.2		ug/L		101	70 - 130
Tert-butyl ethyl ether	ND		25.0	24.8		ug/L		99	70 - 130
tert-Butylbenzene	ND		25.0	24.6		ug/L		98	70 - 130
Tetrachloroethene	ND		25.0	26.3		ug/L		103	70 - 130
Tetrahydrofuran	ND		125	120		ug/L		96	70 - 130
Toluene	ND		25.0	23.3		ug/L		93	70 - 130
trans-1,2-Dichloroethene	ND		25.0	24.0		ug/L		96	70 - 130
trans-1,3-Dichloropropene	ND		25.0	20.5		ug/L		82	70 - 130
Trichloroethene	28		25.0	52.0		ug/L		97	70 - 130
Trichlorofluoromethane	ND		25.0	25.6		ug/L		102	70 - 130
Vinyl chloride	ND		25.0	23.3		ug/L		93	70 - 130
Dibromomethane	ND		25.0	23.8		ug/L		95	70 - 130

Surrogate	*MS %Recovery*	*MS Qualifier*	*Limits*
Toluene-d8 (Surr)	*97*		*70 - 130*
1,2-Dichloroethane-d4 (Surr)	*93*		*70 - 130*
4-Bromofluorobenzene (Surr)	*101*		*70 - 130*

Lab Sample ID: 480-34934-2 MSD
Matrix: Water
Analysis Batch: 108964

Client Sample ID: MW1016D-20130322-01
Prep Type: Total/NA

Analyte	Sample Result	Sample Qualifier	Spike Added	MSD Result	MSD Qualifier	Unit	D	%Rec	%Rec. Limits	RPD	RPD Limit
1,1,1,2-Tetrachloroethane	ND		25.0	24.5		ug/L		98	70 - 130	5	20
1,1,1-Trichloroethane	ND		25.0	24.1		ug/L		96	70 - 130	1	20
1,1,2,2-Tetrachloroethane	ND		25.0	24.1		ug/L		96	70 - 130	3	20
1,1,2-Trichloroethane	ND		25.0	23.7		ug/L		95	70 - 130	1	20
1,1-Dichloroethane	ND		25.0	23.9		ug/L		95	70 - 130	1	20
1,1-Dichloroethene	ND		25.0	25.3		ug/L		98	70 - 130	9	20
1,1-Dichloropropene	ND		25.0	24.6		ug/L		98	70 - 130	2	20
1,2,3-Trichlorobenzene	ND		25.0	25.2		ug/L		101	70 - 130	1	20
1,2,3-Trichloropropane	ND		25.0	24.8		ug/L		99	70 - 130	3	20
1,2,4-Trichlorobenzene	ND		25.0	25.5		ug/L		102	70 - 130	2	20
1,2,4-Trimethylbenzene	ND		25.0	23.2		ug/L		93	70 - 130	3	20
1,2-Dibromo-3-Chloropropane	ND		25.0	24.8		ug/L		99	70 - 130	3	20
1,2-Dichlorobenzene	ND		25.0	24.0		ug/L		96	70 - 130	3	20
1,2-Dichloroethane	ND		25.0	21.8		ug/L		87	70 - 130	0	20
1,2-Dichloropropane	ND		25.0	23.9		ug/L		96	70 - 130	4	20
1,3,5-Trimethylbenzene	ND		25.0	23.4		ug/L		93	70 - 130	1	20
1,3-Dichlorobenzene	ND		25.0	24.4		ug/L		97	70 - 130	5	20
1,3-Dichloropropane	ND		25.0	23.1		ug/L		92	70 - 130	2	20
1,4-Dichlorobenzene	ND		25.0	23.6		ug/L		94	70 - 130	2	20
1,4-Dioxane	ND		1000	1250		ug/L		125	70 - 130	1	20

Method: 8260C - Volatile Organic Compounds (GC/MS) (Continued)

Lab Sample ID: 480-34934-2 MSD
Matrix: Water
Analysis Batch: 108964

Client Sample ID: MW1016D-20130322-01
Prep Type: Total/NA

Analyte	Sample Result	Sample Qualifier	Spike Added	MSD Result	MSD Qualifier	Unit	D	%Rec	%Rec. Limits	RPD	RPD Limit
2,2-Dichloropropane	ND		25.0	19.2		ug/L		77	70 - 130	1	20
2-Butanone (MEK)	ND	*	125	171	F	ug/L		136	70 - 130	0	20
2-Chlorotoluene	ND		25.0	23.6		ug/L		94	70 - 130	2	20
2-Hexanone	ND		125	118		ug/L		94	70 - 130	2	20
4-Chlorotoluene	ND		25.0	20.5		ug/L		82	70 - 130	3	20
4-Isopropyltoluene	ND		25.0	24.6		ug/L		99	70 - 130	4	20
4-Methyl-2-pentanone (MIBK)	ND		125	118		ug/L		94	70 - 130	2	20
Acetone	ND		125	108		ug/L		87	70 - 130	8	20
Benzene	ND		25.0	24.6		ug/L		98	70 - 130	5	20
Bromobenzene	ND		25.0	24.0		ug/L		96	70 - 130	3	20
Bromoform	ND		25.0	22.2		ug/L		89	70 - 130	7	20
Bromomethane	ND		25.0	26.6		ug/L		106	70 - 130	4	20
Carbon disulfide	ND		25.0	25.5		ug/L		100	70 - 130	2	20
Carbon tetrachloride	ND		25.0	22.9		ug/L		92	70 - 130	3	20
Chlorobenzene	ND		25.0	24.6		ug/L		98	70 - 130	2	20
Chlorobromomethane	ND		25.0	25.7		ug/L		103	70 - 130	3	20
Chlorodibromomethane	ND		25.0	22.9		ug/L		92	70 - 130	2	20
Chloroethane	ND		25.0	28.4		ug/L		114	70 - 130	4	20
Chloroform	ND		25.0	23.1		ug/L		92	70 - 130	2	20
Chloromethane	ND		25.0	19.3		ug/L		77	70 - 130	3	20
cis-1,2-Dichloroethene	4.1		25.0	28.6		ug/L		98	70 - 130	2	20
cis-1,3-Dichloropropene	ND		25.0	22.3		ug/L		89	70 - 130	2	20
Dichlorobromomethane	ND		25.0	22.7		ug/L		91	70 - 130	4	20
Dichlorodifluoromethane	ND		50.0	68.5	F	ug/L		137	70 - 130	4	20
Ethyl ether	ND		25.0	25.8		ug/L		103	70 - 130	7	20
Ethylbenzene	ND		25.0	23.9		ug/L		96	70 - 130	3	20
Ethylene Dibromide	ND		25.0	24.2		ug/L		97	70 - 130	4	20
Hexachlorobutadiene	ND		25.0	24.4		ug/L		98	70 - 130	7	20
Isopropyl ether	ND		25.0	26.3		ug/L		105	70 - 130	7	20
Isopropylbenzene	ND		25.0	23.7		ug/L		95	70 - 130	3	20
Methyl tert-butyl ether	ND		25.0	23.5		ug/L		94	70 - 130	1	20
Methylene Chloride	ND		25.0	23.0		ug/L		92	70 - 130	4	20
m-Xylene & p-Xylene	ND		50.0	48.2		ug/L		96	70 - 130	3	20
Naphthalene	ND		25.0	24.9		ug/L		100	70 - 130	2	20
n-Butylbenzene	ND		25.0	23.6		ug/L		94	70 - 130	6	20
N-Propylbenzene	ND		25.0	22.9		ug/L		92	70 - 130	3	20
o-Xylene	ND		25.0	24.5		ug/L		98	70 - 130	4	20
sec-Butylbenzene	ND		25.0	24.3		ug/L		97	70 - 130	3	20
Styrene	ND		25.0	17.6		ug/L		70	70 - 130	6	20
Tert-amyl methyl ether	ND		25.0	27.2		ug/L		109	70 - 130	8	20
Tert-butyl ethyl ether	ND		25.0	26.2		ug/L		105	70 - 130	5	20
tert-Butylbenzene	ND		25.0	25.2		ug/L		101	70 - 130	3	20
Tetrachloroethene	ND		25.0	26.8		ug/L		105	70 - 130	2	20
Tetrahydrofuran	ND		125	122		ug/L		98	70 - 130	2	20
Toluene	ND		25.0	23.8		ug/L		95	70 - 130	2	20
trans-1,2-Dichloroethene	ND		25.0	25.0		ug/L		100	70 - 130	4	20
trans-1,3-Dichloropropene	ND		25.0	21.4		ug/L		86	70 - 130	4	20
Trichloroethene	28		25.0	50.3		ug/L		90	70 - 130	3	20

Method: 8260C - Volatile Organic Compounds (GC/MS) (Continued)

Lab Sample ID: 480-34934-2 MSD — **Client Sample ID: MW1016D-20130322-01**
Matrix: Water — **Prep Type: Total/NA**
Analysis Batch: 108964

Analyte	Sample Result	Sample Qualifier	Spike Added	MSD Result	MSD Qualifier	Unit	D	%Rec	%Rec. Limits	RPD	RPD Limit
Trichlorofluoromethane	ND		25.0	26.2		ug/L		105	70 - 130	2	20
Vinyl chloride	ND		25.0	24.4		ug/L		98	70 - 130	5	20
Dibromomethane	ND		25.0	24.3		ug/L		97	70 - 130	2	20

Surrogate	*MSD %Recovery*	*MSD Qualifier*	*Limits*
Toluene-d8 (Surr)	*96*		*70 - 130*
1,2-Dichloroethane-d4 (Surr)	*90*		*70 - 130*
4-Bromofluorobenzene (Surr)	*102*		*70 - 130*

Lab Sample ID: MB 480-109114/7 — **Client Sample ID: Method Blank**
Matrix: Water — **Prep Type: Total/NA**
Analysis Batch: 109114

Analyte	MB Result	MB Qualifier	RL	MDL	Unit	D	Prepared	Analyzed	Dil Fac
1,1,1,2-Tetrachloroethane	ND		1.0		ug/L			03/26/13 00:05	1
1,1,1-Trichloroethane	ND		1.0		ug/L			03/26/13 00:05	1
1,1,2,2-Tetrachloroethane	ND		0.50		ug/L			03/26/13 00:05	1
1,1,2-Trichloroethane	ND		1.0		ug/L			03/26/13 00:05	1
1,1-Dichloroethane	ND		1.0		ug/L			03/26/13 00:05	1
1,1-Dichloroethene	ND		1.0		ug/L			03/26/13 00:05	1
1,1-Dichloropropene	ND		1.0		ug/L			03/26/13 00:05	1
1,2,3-Trichlorobenzene	ND		1.0		ug/L			03/26/13 00:05	1
1,2,3-Trichloropropane	ND		1.0		ug/L			03/26/13 00:05	1
1,2,4-Trichlorobenzene	ND		1.0		ug/L			03/26/13 00:05	1
1,2,4-Trimethylbenzene	ND		1.0		ug/L			03/26/13 00:05	1
1,2-Dibromo-3-Chloropropane	ND		5.0		ug/L			03/26/13 00:05	1
1,2-Dichlorobenzene	ND		1.0		ug/L			03/26/13 00:05	1
1,2-Dichloroethane	ND		1.0		ug/L			03/26/13 00:05	1
1,2-Dichloropropane	ND		1.0		ug/L			03/26/13 00:05	1
1,3,5-Trimethylbenzene	ND		1.0		ug/L			03/26/13 00:05	1
1,3-Dichlorobenzene	ND		1.0		ug/L			03/26/13 00:05	1
1,3-Dichloropropane	ND		1.0		ug/L			03/26/13 00:05	1
1,4-Dichlorobenzene	ND		1.0		ug/L			03/26/13 00:05	1
1,4-Dioxane	ND		50		ug/L			03/26/13 00:05	1
2,2-Dichloropropane	ND		1.0		ug/L			03/26/13 00:05	1
2-Butanone (MEK)	ND		10		ug/L			03/26/13 00:05	1
2-Chlorotoluene	ND		1.0		ug/L			03/26/13 00:05	1
2-Hexanone	ND		10		ug/L			03/26/13 00:05	1
4-Chlorotoluene	ND		1.0		ug/L			03/26/13 00:05	1
4-Isopropyltoluene	ND		1.0		ug/L			03/26/13 00:05	1
4-Methyl-2-pentanone (MIBK)	ND		10		ug/L			03/26/13 00:05	1
Acetone	ND		50		ug/L			03/26/13 00:05	1
Benzene	ND		1.0		ug/L			03/26/13 00:05	1
Bromobenzene	ND		1.0		ug/L			03/26/13 00:05	1
Bromoform	ND		1.0		ug/L			03/26/13 00:05	1
Bromomethane	ND		2.0		ug/L			03/26/13 00:05	1
Carbon disulfide	ND		10		ug/L			03/26/13 00:05	1
Carbon tetrachloride	ND		1.0		ug/L			03/26/13 00:05	1

Method: 8260C - Volatile Organic Compounds (GC/MS) (Continued)

Lab Sample ID: MB 480-109114/7
Matrix: Water
Analysis Batch: 109114

Client Sample ID: Method Blank
Prep Type: Total/NA

Analyte	MB Result	MB Qualifier	RL	MDL	Unit	D	Prepared	Analyzed	Dil Fac
Chlorobenzene	ND		1.0		ug/L			03/26/13 00:05	1
Chlorobromomethane	ND		1.0		ug/L			03/26/13 00:05	1
Chlorodibromomethane	ND		0.50		ug/L			03/26/13 00:05	1
Chloroethane	ND		2.0		ug/L			03/26/13 00:05	1
Chloroform	ND		1.0		ug/L			03/26/13 00:05	1
Chloromethane	ND		2.0		ug/L			03/26/13 00:05	1
cis-1,2-Dichloroethene	ND		1.0		ug/L			03/26/13 00:05	1
cis-1,3-Dichloropropene	ND		0.40		ug/L			03/26/13 00:05	1
Dichlorobromomethane	ND		0.50		ug/L			03/26/13 00:05	1
Dichlorodifluoromethane	ND		1.0		ug/L			03/26/13 00:05	1
Ethyl ether	ND		1.0		ug/L			03/26/13 00:05	1
Ethylbenzene	ND		1.0		ug/L			03/26/13 00:05	1
Ethylene Dibromide	ND		1.0		ug/L			03/26/13 00:05	1
Hexachlorobutadiene	ND		0.40		ug/L			03/26/13 00:05	1
Isopropyl ether	ND		10		ug/L			03/26/13 00:05	1
Isopropylbenzene	ND		1.0		ug/L			03/26/13 00:05	1
Methyl tert-butyl ether	ND		1.0		ug/L			03/26/13 00:05	1
Methylene Chloride	ND		1.0		ug/L			03/26/13 00:05	1
m-Xylene & p-Xylene	ND		2.0		ug/L			03/26/13 00:05	1
Naphthalene	ND		5.0		ug/L			03/26/13 00:05	1
n-Butylbenzene	ND		1.0		ug/L			03/26/13 00:05	1
N-Propylbenzene	ND		1.0		ug/L			03/26/13 00:05	1
o-Xylene	ND		1.0		ug/L			03/26/13 00:05	1
sec-Butylbenzene	ND		1.0		ug/L			03/26/13 00:05	1
Styrene	ND		1.0		ug/L			03/26/13 00:05	1
Tert-amyl methyl ether	ND		5.0		ug/L			03/26/13 00:05	1
Tert-butyl ethyl ether	ND		5.0		ug/L			03/26/13 00:05	1
tert-Butylbenzene	ND		1.0		ug/L			03/26/13 00:05	1
Tetrachloroethene	ND		1.0		ug/L			03/26/13 00:05	1
Tetrahydrofuran	ND		10		ug/L			03/26/13 00:05	1
Toluene	ND		1.0		ug/L			03/26/13 00:05	1
trans-1,2-Dichloroethene	ND		1.0		ug/L			03/26/13 00:05	1
trans-1,3-Dichloropropene	ND		0.40		ug/L			03/26/13 00:05	1
Trichloroethene	ND		1.0		ug/L			03/26/13 00:05	1
Trichlorofluoromethane	ND		1.0		ug/L			03/26/13 00:05	1
Vinyl chloride	ND		0.50		ug/L			03/26/13 00:05	1
Dibromomethane	ND		1.0		ug/L			03/26/13 00:05	1

Surrogate	*MB %Recovery*	*MB Qualifier*	*Limits*	*Prepared*	*Analyzed*	*Dil Fac*
Toluene-d8 (Surr)	*97*		*70 - 130*		*03/26/13 00:05*	*1*
1,2-Dichloroethane-d4 (Surr)	*93*		*70 - 130*		*03/26/13 00:05*	*1*
4-Bromofluorobenzene (Surr)	*99*		*70 - 130*		*03/26/13 00:05*	*1*

Method: 8260C - Volatile Organic Compounds (GC/MS) (Continued)

Lab Sample ID: LCS 480-109114/4
Matrix: Water
Analysis Batch: 109114

Client Sample ID: Lab Control Sample
Prep Type: Total/NA

Analyte	Spike Added	LCS Result	LCS Qualifier	Unit	D	%Rec	%Rec. Limits
1,1,1,2-Tetrachloroethane	25.0	24.9		ug/L		100	70 - 130
1,1,1-Trichloroethane	25.0	23.4		ug/L		93	70 - 130
1,1,2,2-Tetrachloroethane	25.0	24.2		ug/L		97	70 - 130
1,1,2-Trichloroethane	25.0	23.5		ug/L		94	70 - 130
1,1-Dichloroethane	25.0	23.7		ug/L		95	70 - 130
1,1-Dichloroethene	25.0	24.1		ug/L		97	70 - 130
1,1-Dichloropropene	25.0	24.5		ug/L		98	70 - 130
1,2,3-Trichlorobenzene	25.0	25.9		ug/L		104	70 - 130
1,2,3-Trichloropropane	25.0	24.5		ug/L		98	70 - 130
1,2,4-Trichlorobenzene	25.0	26.5		ug/L		106	70 - 130
1,2,4-Trimethylbenzene	25.0	23.3		ug/L		93	70 - 130
1,2-Dibromo-3-Chloropropane	25.0	23.1		ug/L		93	70 - 130
1,2-Dichlorobenzene	25.0	24.4		ug/L		97	70 - 130
1,2-Dichloroethane	25.0	22.6		ug/L		91	70 - 130
1,2-Dichloropropane	25.0	23.8		ug/L		95	70 - 130
1,3,5-Trimethylbenzene	25.0	23.9		ug/L		96	70 - 130
1,3-Dichlorobenzene	25.0	24.0		ug/L		96	70 - 130
1,3-Dichloropropane	25.0	23.3		ug/L		93	70 - 130
1,4-Dichlorobenzene	25.0	24.7		ug/L		99	70 - 130
1,4-Dioxane	1000	981		ug/L		98	70 - 130
2,2-Dichloropropane	25.0	23.5		ug/L		94	70 - 130
2-Butanone (MEK)	125	159		ug/L		127	70 - 130
2-Chlorotoluene	25.0	24.1		ug/L		96	70 - 130
2-Hexanone	125	109		ug/L		87	70 - 130
4-Chlorotoluene	25.0	20.9		ug/L		83	70 - 130
4-Isopropyltoluene	25.0	24.5		ug/L		98	70 - 130
4-Methyl-2-pentanone (MIBK)	125	111		ug/L		89	70 - 130
Acetone	125	104		ug/L		83	70 - 130
Benzene	25.0	23.8		ug/L		95	70 - 130
Bromobenzene	25.0	24.0		ug/L		96	70 - 130
Bromoform	25.0	23.6		ug/L		95	70 - 130
Bromomethane	25.0	25.9		ug/L		104	70 - 130
Carbon disulfide	25.0	22.8		ug/L		91	70 - 130
Carbon tetrachloride	25.0	22.7		ug/L		91	70 - 130
Chlorobenzene	25.0	24.6		ug/L		99	70 - 130
Chlorobromomethane	25.0	25.9		ug/L		104	70 - 130
Chlorodibromomethane	25.0	23.8		ug/L		95	70 - 130
Chloroethane	25.0	24.5		ug/L		98	70 - 130
Chloroform	25.0	23.1		ug/L		92	70 - 130
Chloromethane	25.0	20.1		ug/L		80	70 - 130
cis-1,2-Dichloroethene	25.0	24.1		ug/L		96	70 - 130
cis-1,3-Dichloropropene	25.0	23.7		ug/L		95	70 - 130
Dichlorobromomethane	25.0	22.9		ug/L		92	70 - 130
Dichlorodifluoromethane	50.0	59.8		ug/L		120	70 - 130
Ethyl ether	25.0	24.8		ug/L		99	70 - 130
Ethylbenzene	25.0	23.6		ug/L		94	70 - 130
Ethylene Dibromide	25.0	24.1		ug/L		96	70 - 130
Hexachlorobutadiene	25.0	25.7		ug/L		103	70 - 130

Method: 8260C - Volatile Organic Compounds (GC/MS) (Continued)

Lab Sample ID: LCS 480-109114/4
Matrix: Water
Analysis Batch: 109114

Client Sample ID: Lab Control Sample
Prep Type: Total/NA

Analyte	Spike Added	LCS Result	LCS Qualifier	Unit	D	%Rec	%Rec. Limits
Isopropyl ether	25.0	25.1		ug/L		100	70 - 130
Isopropylbenzene	25.0	23.6		ug/L		95	70 - 130
Methyl tert-butyl ether	25.0	22.7		ug/L		91	70 - 130
Methylene Chloride	25.0	23.1		ug/L		92	70 - 130
m-Xylene & p-Xylene	50.0	47.9		ug/L		96	70 - 130
Naphthalene	25.0	24.5		ug/L		98	70 - 130
n-Butylbenzene	25.0	24.0		ug/L		96	70 - 130
N-Propylbenzene	25.0	23.1		ug/L		92	70 - 130
o-Xylene	25.0	23.8		ug/L		95	70 - 130
sec-Butylbenzene	25.0	24.1		ug/L		96	70 - 130
Styrene	25.0	23.8		ug/L		95	70 - 130
Tert-amyl methyl ether	25.0	25.0		ug/L		100	70 - 130
Tert-butyl ethyl ether	25.0	24.3		ug/L		97	70 - 130
tert-Butylbenzene	25.0	25.1		ug/L		100	70 - 130
Tetrachloroethene	25.0	27.2		ug/L		109	70 - 130
Tetrahydrofuran	125	114		ug/L		91	70 - 130
Toluene	25.0	24.1		ug/L		96	70 - 130
trans-1,2-Dichloroethene	25.0	24.3		ug/L		97	70 - 130
trans-1,3-Dichloropropene	25.0	22.9		ug/L		92	70 - 130
Trichloroethene	25.0	24.7		ug/L		99	70 - 130
Trichlorofluoromethane	25.0	24.8		ug/L		99	70 - 130
Vinyl chloride	25.0	22.5		ug/L		90	70 - 130
Dibromomethane	25.0	24.4		ug/L		98	70 - 130

Surrogate	*LCS %Recovery*	*LCS Qualifier*	*Limits*
Toluene-d8 (Surr)	*97*		*70 - 130*
1,2-Dichloroethane-d4 (Surr)	*91*		*70 - 130*
4-Bromofluorobenzene (Surr)	*102*		*70 - 130*

Lab Sample ID: LCSD 480-109114/5
Matrix: Water
Analysis Batch: 109114

Client Sample ID: Lab Control Sample Dup
Prep Type: Total/NA

Analyte	Spike Added	LCSD Result	LCSD Qualifier	Unit	D	%Rec	%Rec. Limits	RPD	RPD Limit
1,1,1,2-Tetrachloroethane	25.0	23.5		ug/L		94	70 - 130	6	20
1,1,1-Trichloroethane	25.0	21.7		ug/L		87	70 - 130	7	20
1,1,2,2-Tetrachloroethane	25.0	23.8		ug/L		95	70 - 130	2	20
1,1,2-Trichloroethane	25.0	24.1		ug/L		96	70 - 130	3	20
1,1-Dichloroethane	25.0	22.8		ug/L		91	70 - 130	4	20
1,1-Dichloroethene	25.0	23.5		ug/L		94	70 - 130	2	20
1,1-Dichloropropene	25.0	23.4		ug/L		94	70 - 130	5	20
1,2,3-Trichlorobenzene	25.0	25.0		ug/L		100	70 - 130	4	20
1,2,3-Trichloropropane	25.0	25.1		ug/L		100	70 - 130	2	20
1,2,4-Trichlorobenzene	25.0	26.0		ug/L		104	70 - 130	2	20
1,2,4-Trimethylbenzene	25.0	22.4		ug/L		90	70 - 130	4	20
1,2-Dibromo-3-Chloropropane	25.0	23.2		ug/L		93	70 - 130	0	20
1,2-Dichlorobenzene	25.0	23.4		ug/L		94	70 - 130	4	20
1,2-Dichloroethane	25.0	21.5		ug/L		86	70 - 130	5	20

Method: 8260C - Volatile Organic Compounds (GC/MS) (Continued)

Lab Sample ID: LCSD 480-109114/5
Matrix: Water
Analysis Batch: 109114

Client Sample ID: Lab Control Sample Dup
Prep Type: Total/NA

Analyte	Spike Added	LCSD Result	LCSD Qualifier	Unit	D	%Rec	%Rec. Limits	RPD	RPD Limit
1,2-Dichloropropane	25.0	23.0		ug/L		92	70 - 130	3	20
1,3,5-Trimethylbenzene	25.0	22.8		ug/L		91	70 - 130	5	20
1,3-Dichlorobenzene	25.0	23.5		ug/L		94	70 - 130	2	20
1,3-Dichloropropane	25.0	23.0		ug/L		92	70 - 130	1	20
1,4-Dichlorobenzene	25.0	23.3		ug/L		93	70 - 130	6	20
1,4-Dioxane	1000	972		ug/L		97	70 - 130	1	20
2,2-Dichloropropane	25.0	21.6		ug/L		87	70 - 130	8	20
2-Butanone (MEK)	125	160		ug/L		128	70 - 130	1	20
2-Chlorotoluene	25.0	23.4		ug/L		93	70 - 130	3	20
2-Hexanone	125	108		ug/L		86	70 - 130	2	20
4-Chlorotoluene	25.0	23.0		ug/L		92	70 - 130	10	20
4-Isopropyltoluene	25.0	23.5		ug/L		94	70 - 130	4	20
4-Methyl-2-pentanone (MIBK)	125	109		ug/L		87	70 - 130	2	20
Acetone	125	107		ug/L		86	70 - 130	3	20
Benzene	25.0	22.9		ug/L		92	70 - 130	4	20
Bromobenzene	25.0	23.3		ug/L		93	70 - 130	3	20
Bromoform	25.0	23.0		ug/L		92	70 - 130	3	20
Bromomethane	25.0	24.2		ug/L		97	70 - 130	7	20
Carbon disulfide	25.0	21.3		ug/L		85	70 - 130	7	20
Carbon tetrachloride	25.0	21.8		ug/L		87	70 - 130	4	20
Chlorobenzene	25.0	23.7		ug/L		95	70 - 130	4	20
Chlorobromomethane	25.0	25.3		ug/L		101	70 - 130	3	20
Chlorodibromomethane	25.0	23.8		ug/L		95	70 - 130	0	20
Chloroethane	25.0	23.1		ug/L		93	70 - 130	6	20
Chloroform	25.0	22.7		ug/L		91	70 - 130	2	20
Chloromethane	25.0	21.8		ug/L		87	70 - 130	8	20
cis-1,2-Dichloroethene	25.0	24.2		ug/L		97	70 - 130	0	20
cis-1,3-Dichloropropene	25.0	23.4		ug/L		94	70 - 130	1	20
Dichlorobromomethane	25.0	22.5		ug/L		90	70 - 130	2	20
Dichlorodifluoromethane	50.0	56.1		ug/L		112	70 - 130	6	20
Ethyl ether	25.0	23.8		ug/L		95	70 - 130	4	20
Ethylbenzene	25.0	23.0		ug/L		92	70 - 130	2	20
Ethylene Dibromide	25.0	23.6		ug/L		95	70 - 130	2	20
Hexachlorobutadiene	25.0	24.4		ug/L		98	70 - 130	5	20
Isopropyl ether	25.0	24.5		ug/L		98	70 - 130	2	20
Isopropylbenzene	25.0	22.7		ug/L		91	70 - 130	4	20
Methyl tert-butyl ether	25.0	22.3		ug/L		89	70 - 130	2	20
Methylene Chloride	25.0	21.9		ug/L		88	70 - 130	5	20
m-Xylene & p-Xylene	50.0	46.5		ug/L		93	70 - 130	3	20
Naphthalene	25.0	24.6		ug/L		98	70 - 130	0	20
n-Butylbenzene	25.0	22.4		ug/L		90	70 - 130	7	20
N-Propylbenzene	25.0	22.2		ug/L		89	70 - 130	4	20
o-Xylene	25.0	23.5		ug/L		94	70 - 130	2	20
sec-Butylbenzene	25.0	23.0		ug/L		92	70 - 130	5	20
Styrene	25.0	23.5		ug/L		94	70 - 130	2	20
Tert-amyl methyl ether	25.0	24.1		ug/L		96	70 - 130	4	20
Tert-butyl ethyl ether	25.0	23.9		ug/L		95	70 - 130	2	20
tert-Butylbenzene	25.0	23.6		ug/L		94	70 - 130	6	20

Method: 8260C - Volatile Organic Compounds (GC/MS) (Continued)

Lab Sample ID: LCSD 480-109114/5
Matrix: Water
Analysis Batch: 109114

Client Sample ID: Lab Control Sample Dup
Prep Type: Total/NA

Analyte			Spike Added	LCSD Result	LCSD Qualifier	Unit	D	%Rec	%Rec. Limits	RPD	RPD Limit
Tetrachloroethene			25.0	25.7		ug/L		103	70 - 130	6	20
Tetrahydrofuran			125	114		ug/L		91	70 - 130	0	20
Toluene			25.0	23.2		ug/L		93	70 - 130	4	20
trans-1,2-Dichloroethene			25.0	23.6		ug/L		94	70 - 130	3	20
trans-1,3-Dichloropropene			25.0	22.5		ug/L		90	70 - 130	2	20
Trichloroethene			25.0	23.8		ug/L		95	70 - 130	4	20
Trichlorofluoromethane			25.0	24.6		ug/L		98	70 - 130	1	20
Vinyl chloride			25.0	20.7		ug/L		83	70 - 130	8	20
Dibromomethane			25.0	23.7		ug/L		95	70 - 130	3	20

Surrogate	*LCSD %Recovery*	*LCSD Qualifier*	*Limits*
Toluene-d8 (Surr)	*96*		*70 - 130*
1,2-Dichloroethane-d4 (Surr)	*91*		*70 - 130*
4-Bromofluorobenzene (Surr)	*100*		*70 - 130*

Method: 522 MOD - 1,4 Dioxane (GC/MS SIM)

Lab Sample ID: MB 200-53504/1-A
Matrix: Water
Analysis Batch: 53519

Client Sample ID: Method Blank
Prep Type: Total/NA
Prep Batch: 53504

Analyte	MB Result	MB Qualifier	RL	MDL	Unit	D	Prepared	Analyzed	Dil Fac
1,4-Dioxane	ND		0.20		ug/L		03/27/13 14:05	03/27/13 18:12	1

Surrogate	*MB %Recovery*	*MB Qualifier*	*Limits*	*Prepared*	*Analyzed*	*Dil Fac*
1,4-Dioxane-d8 (Surr)	*79*		*70 - 130*	*03/27/13 14:05*	*03/27/13 18:12*	*1*

Lab Sample ID: LCS 200-53504/2-A
Matrix: Water
Analysis Batch: 53519

Client Sample ID: Lab Control Sample
Prep Type: Total/NA
Prep Batch: 53504

Analyte			Spike Added	LCS Result	LCS Qualifier	Unit	D	%Rec	%Rec. Limits		
1,4-Dioxane			8.00	6.67		ug/L		83	70 - 130		

Surrogate	*LCS %Recovery*	*LCS Qualifier*	*Limits*
1,4-Dioxane-d8 (Surr)	*84*		*70 - 130*

QC Association Summary

Client: ERM-Northeast
Project/Site: IDS Wayland

TestAmerica Job ID: 480-34934-1

GC/MS VOA

Analysis Batch: 108964

Lab Sample ID	Client Sample ID	Prep Type	Matrix	Method	Prep Batch
480-34934-1	MW1024D-20130322-01	Total/NA	Water	8260C	
480-34934-2	MW1016D-20130322-01	Total/NA	Water	8260C	
480-34934-2 MS	MW1016D-20130322-01	Total/NA	Water	8260C	
480-34934-2 MSD	MW1016D-20130322-01	Total/NA	Water	8260C	
LCS 480-108964/4	Lab Control Sample	Total/NA	Water	8260C	
LCSD 480-108964/5	Lab Control Sample Dup	Total/NA	Water	8260C	
MB 480-108964/7	Method Blank	Total/NA	Water	8260C	

Analysis Batch: 109114

Lab Sample ID	Client Sample ID	Prep Type	Matrix	Method	Prep Batch
480-34934-3	MW1003-20130322-01	Total/NA	Water	8260C	
480-34934-4	MW1014-20130322-01	Total/NA	Water	8260C	
480-34934-5	MW1026D-20130322-01	Total/NA	Water	8260C	
480-34934-6	MW1013-20130322-01	Total/NA	Water	8260C	
480-34934-7	MW1002B-20130322-01	Total/NA	Water	8260C	
480-34934-8	MW1002M-20130322-01	Total/NA	Water	8260C	
480-34934-9	TB003-20130322-01	Total/NA	Water	8260C	
LCS 480-109114/4	Lab Control Sample	Total/NA	Water	8260C	
LCSD 480-109114/5	Lab Control Sample Dup	Total/NA	Water	8260C	
MB 480-109114/7	Method Blank	Total/NA	Water	8260C	

Analysis Batch: 109279

Lab Sample ID	Client Sample ID	Prep Type	Matrix	Method	Prep Batch
480-34934-1	MW1024D-20130322-01	Total/NA	Water	8260B SIM	
480-34934-5	MW1026D-20130322-01	Total/NA	Water	8260B SIM	
LCS 480-109279/3	Lab Control Sample	Total/NA	Water	8260B SIM	
LCSD 480-109279/4	Lab Control Sample Dup	Total/NA	Water	8260B SIM	
MB 480-109279/5	Method Blank	Total/NA	Water	8260B SIM	

GC/MS Semi VOA

Prep Batch: 53504

Lab Sample ID	Client Sample ID	Prep Type	Matrix	Method	Prep Batch
480-34934-1	MW1024D-20130322-01	Total/NA	Water	3535A	
480-34934-5	MW1026D-20130322-01	Total/NA	Water	3535A	
LCS 200-53504/2-A	Lab Control Sample	Total/NA	Water	3535A	
MB 200-53504/1-A	Method Blank	Total/NA	Water	3535A	

Analysis Batch: 53519

Lab Sample ID	Client Sample ID	Prep Type	Matrix	Method	Prep Batch
480-34934-1	MW1024D-20130322-01	Total/NA	Water	522 MOD	53504
480-34934-5	MW1026D-20130322-01	Total/NA	Water	522 MOD	53504
LCS 200-53504/2-A	Lab Control Sample	Total/NA	Water	522 MOD	53504
MB 200-53504/1-A	Method Blank	Total/NA	Water	522 MOD	53504

Lab Chronicle

Client: ERM-Northeast
Project/Site: IDS Wayland

TestAmerica Job ID: 480-34934-1

Client Sample ID: MW1024D-20130322-01 — Lab Sample ID: 480-34934-1

Date Collected: 03/22/13 10:20 — **Matrix: Water**
Date Received: 03/23/13 08:30

Prep Type	Batch Type	Batch Method	Run	Dilution Factor	Batch Number	Prepared or Analyzed	Analyst	Lab
Total/NA	Analysis	8260C		1	108964	03/25/13 18:55	RL	TAL BUF
Total/NA	Analysis	8260B SIM		1	109279	03/26/13 23:23	TRB	TAL BUF
Total/NA	Prep	3535A			53504	03/27/13 14:05	JAB	TAL BUR
Total/NA	Analysis	522 MOD		1	53519	03/27/13 20:01	RJH	TAL BUR

Client Sample ID: MW1016D-20130322-01 — Lab Sample ID: 480-34934-2

Date Collected: 03/22/13 09:15 — **Matrix: Water**
Date Received: 03/23/13 08:30

Prep Type	Batch Type	Batch Method	Run	Dilution Factor	Batch Number	Prepared or Analyzed	Analyst	Lab
Total/NA	Analysis	8260C		1	108964	03/25/13 19:18	RL	TAL BUF

Client Sample ID: MW1003-20130322-01 — Lab Sample ID: 480-34934-3

Date Collected: 03/22/13 11:25 — **Matrix: Water**
Date Received: 03/23/13 08:30

Prep Type	Batch Type	Batch Method	Run	Dilution Factor	Batch Number	Prepared or Analyzed	Analyst	Lab
Total/NA	Analysis	8260C		1	109114	03/26/13 04:35	TRF	TAL BUF

Client Sample ID: MW1014-20130322-01 — Lab Sample ID: 480-34934-4

Date Collected: 03/22/13 10:55 — **Matrix: Water**
Date Received: 03/23/13 08:30

Prep Type	Batch Type	Batch Method	Run	Dilution Factor	Batch Number	Prepared or Analyzed	Analyst	Lab
Total/NA	Analysis	8260C		1	109114	03/26/13 04:59	TRF	TAL BUF

Client Sample ID: MW1026D-20130322-01 — Lab Sample ID: 480-34934-5

Date Collected: 03/22/13 11:00 — **Matrix: Water**
Date Received: 03/23/13 08:30

Prep Type	Batch Type	Batch Method	Run	Dilution Factor	Batch Number	Prepared or Analyzed	Analyst	Lab
Total/NA	Analysis	8260C		1	109114	03/26/13 05:23	TRF	TAL BUF
Total/NA	Analysis	8260B SIM		1	109279	03/26/13 23:48	TRB	TAL BUF
Total/NA	Prep	3535A			53504	03/27/13 14:05	JAB	TAL BUR
Total/NA	Analysis	522 MOD		1	53519	03/27/13 20:16	RJH	TAL BUR

Client Sample ID: MW1013-20130322-01 — Lab Sample ID: 480-34934-6

Date Collected: 03/22/13 09:15 — **Matrix: Water**
Date Received: 03/23/13 08:30

Prep Type	Batch Type	Batch Method	Run	Dilution Factor	Batch Number	Prepared or Analyzed	Analyst	Lab
Total/NA	Analysis	8260C		1	109114	03/26/13 05:46	TRF	TAL BUF

Lab Chronicle

Client: ERM-Northeast
Project/Site: IDS Wayland

TestAmerica Job ID: 480-34934-1

Client Sample ID: MW1002B-20130322-01 — Lab Sample ID: 480-34934-7

Date Collected: 03/22/13 10:30 — **Matrix: Water**
Date Received: 03/23/13 08:30

Prep Type	Batch Type	Batch Method	Run	Dilution Factor	Batch Number	Prepared or Analyzed	Analyst	Lab
Total/NA	Analysis	8260C		1	109114	03/26/13 06:10	TRF	TAL BUF

Client Sample ID: MW1002M-20130322-01 — Lab Sample ID: 480-34934-8

Date Collected: 03/22/13 08:45 — **Matrix: Water**
Date Received: 03/23/13 08:30

Prep Type	Batch Type	Batch Method	Run	Dilution Factor	Batch Number	Prepared or Analyzed	Analyst	Lab
Total/NA	Analysis	8260C		1	109114	03/26/13 06:34	TRF	TAL BUF

Client Sample ID: TB003-20130322-01 — Lab Sample ID: 480-34934-9

Date Collected: 03/22/13 00:00 — **Matrix: Water**
Date Received: 03/23/13 08:30

Prep Type	Batch Type	Batch Method	Run	Dilution Factor	Batch Number	Prepared or Analyzed	Analyst	Lab
Total/NA	Analysis	8260C		1	109114	03/26/13 06:58	TRF	TAL BUF

Laboratory References:

TAL BUF = TestAmerica Buffalo, 10 Hazelwood Drive, Amherst, NY 14228-2298, TEL (716)691-2600

TAL BUR = TestAmerica Burlington, 30 Community Drive, Suite 11, South Burlington, VT 05403, TEL (802)660-1990

Certification Summary

Client: ERM-Northeast
Project/Site: IDS Wayland

TestAmerica Job ID: 480-34934-1

Laboratory: TestAmerica Buffalo

All certifications held by this laboratory are listed. Not all certifications are applicable to this report.

Authority	Program	EPA Region	Certification ID	Expiration Date
Arkansas DEQ	State Program	6	88-0686	07-06-13
California	NELAP	9	1169CA	09-30-13
Connecticut	State Program	1	PH-0568	09-30-14
Florida	NELAP	4	E87672	06-30-13
Georgia	State Program	4	N/A	03-31-13
Georgia	State Program	4	956	06-30-13
Georgia	State Program	4	956	06-30-13
Illinois	NELAP	5	200003	09-30-13
Iowa	State Program	7	374	03-01-13
Kansas	NELAP	7	E-10187	01-31-14
Kentucky	State Program	4	90029	12-31-13
Kentucky (UST)	State Program	4	30	04-01-13
Louisiana	NELAP	6	02031	06-30-13
Maine	State Program	1	NY00044	12-04-13
Maryland	State Program	3	294	03-31-13
Massachusetts	State Program	1	M-NY044	06-30-13
Michigan	State Program	5	9937	04-01-13
Minnesota	NELAP	5	036-999-337	12-31-13
New Hampshire	NELAP	1	2973	09-11-13
New Hampshire	NELAP	1	2337	11-17-13
New Jersey	NELAP	2	NY455	06-30-13
New York	NELAP	2	10026	03-31-13
North Dakota	State Program	8	R-176	03-31-13
Oklahoma	State Program	6	9421	08-31-13
Oregon	NELAP	10	NY200003	06-09-13
Pennsylvania	NELAP	3	68-00281	07-31-13
Rhode Island	State Program	1	LAO00328	12-31-13
Tennessee	State Program	4	TN02970	04-01-13
Texas	NELAP	6	T104704412-11-2	07-31-13
USDA	Federal		P330-11-00386	11-22-14
Virginia	NELAP	3	460185	09-14-13
Washington	State Program	10	C784	02-10-14
West Virginia DEP	State Program	3	252	09-30-13
Wisconsin	State Program	5	998310390	08-31-13

Laboratory: TestAmerica Burlington

All certifications held by this laboratory are listed. Not all certifications are applicable to this report.

Authority	Program	EPA Region	Certification ID	Expiration Date
Connecticut	State Program	1	PH-0751	09-30-13
DE Haz. Subst. Cleanup Act (HSCA)	State Program	3	NA	02-13-15
Florida	NELAP	4	E87467	06-30-13
L-A-B	DoD ELAP		L2336	10-26-13
Louisiana	NELAP	6	176292	06-30-13
Maine	State Program	1	VT00008	04-17-13
Minnesota	NELAP	5	050-999-436	12-31-13
New Hampshire	NELAP	1	200610	12-18-13
New Jersey	NELAP	2	VT972	06-30-13
New York	NELAP	2	10391	04-01-13
Pennsylvania	NELAP	3	68-00489	04-30-13
Rhode Island	State Program	1	LAO00298	12-30-13
USDA	Federal		P330-11-00093	02-17-14

Certification Summary

Client: ERM-Northeast
Project/Site: IDS Wayland

TestAmerica Job ID: 480-34934-1

Laboratory: TestAmerica Burlington (Continued)

All certifications held by this laboratory are listed. Not all certifications are applicable to this report.

Authority	Program	EPA Region	Certification ID	Expiration Date
Vermont	State Program	1	VT-4000	12-31-13
Virginia	NELAP	3	460209	12-14-13

Method Summary

Client: ERM-Northeast
Project/Site: IDS Wayland

TestAmerica Job ID: 480-34934-1

Method	Method Description	Protocol	Laboratory
8260B SIM	Volatile Organic Compounds (GC/MS)	SW846	TAL BUF
8260C	Volatile Organic Compounds (GC/MS)	MA DEP	TAL BUF
522 MOD	1,4 Dioxane (GC/MS SIM)	EPA	TAL BUR

Protocol References:

EPA = US Environmental Protection Agency

MA DEP = Massachusetts Department Of Environmental Protection

SW846 = "Test Methods For Evaluating Solid Waste, Physical/Chemical Methods", Third Edition, November 1986 And Its Updates.

Laboratory References:

TAL BUF = TestAmerica Buffalo, 10 Hazelwood Drive, Amherst, NY 14228-2298, TEL (716)691-2600

TAL BUR = TestAmerica Burlington, 30 Community Drive, Suite 11, South Burlington, VT 05403, TEL (802)660-1990

Sample Summary

Client: ERM-Northeast
Project/Site: IDS Wayland

TestAmerica Job ID: 480-34934-1

Lab Sample ID	Client Sample ID	Matrix	Collected	Received
480-34934-1	MW1024D-20130322-01	Water	03/22/13 10:20	03/23/13 08:30
480-34934-2	MW1016D-20130322-01	Water	03/22/13 09:15	03/23/13 08:30
480-34934-3	MW1003-20130322-01	Water	03/22/13 11:25	03/23/13 08:30
480-34934-4	MW1014-20130322-01	Water	03/22/13 10:55	03/23/13 08:30
480-34934-5	MW1026D-20130322-01	Water	03/22/13 11:00	03/23/13 08:30
480-34934-6	MW1013-20130322-01	Water	03/22/13 09:15	03/23/13 08:30
480-34934-7	MW1002B-20130322-01	Water	03/22/13 10:30	03/23/13 08:30
480-34934-8	MW1002M-20130322-01	Water	03/22/13 08:45	03/23/13 08:30
480-34934-9	TB003-20130322-01	Water	03/22/13 00:00	03/23/13 08:30

Login Sample Receipt Checklist

Client: ERM-Northeast

Job Number: 480-34934-1

Login Number: 34934
List Number: 1
Creator: Kolb, Chris M

List Source: TestAmerica Buffalo

Question	Answer	Comment
Radioactivity either was not measured or, if measured, is at or below background	N/A	
The cooler's custody seal, if present, is intact.	True	
The cooler or samples do not appear to have been compromised or tampered with.	True	
Samples were received on ice.	True	
Cooler Temperature is acceptable.	True	
Cooler Temperature is recorded.	True	
COC is present.	True	
COC is filled out in ink and legible.	True	
COC is filled out with all pertinent information.	True	
Is the Field Sampler's name present on COC?	True	
There are no discrepancies between the sample IDs on the containers and the COC.	True	
Samples are received within Holding Time.	True	
Sample containers have legible labels.	True	
Containers are not broken or leaking.	True	
Sample collection date/times are provided.	True	
Appropriate sample containers are used.	True	
Sample bottles are completely filled.	True	
Sample Preservation Verified	True	
There is sufficient vol. for all requested analyses, incl. any requested MS/MSDs	True	
VOA sample vials do not have headspace or bubble is <6mm (1/4") in diameter.	True	
If necessary, staff have been informed of any short hold time or quick TAT needs	True	
Multiphasic samples are not present.	True	
Samples do not require splitting or compositing.	True	
Sampling Company provided.	True	
Samples received within 48 hours of sampling.	True	
Samples requiring field filtration have been filtered in the field.	True	
Chlorine Residual checked.	N/A	

Login Sample Receipt Checklist

Client: ERM-Northeast

Job Number: 480-34934-1

Login Number: 34934
List Number: 1
Creator: Poucher, Stephanie A

List Source: TestAmerica Burlington
List Creation: 03/26/13 12:10 PM

Question	Answer	Comment
Radioactivity wasn't checked or is </= background as measured by a survey meter.	N/A	Lab does not accept radioactive samples.
The cooler's custody seal, if present, is intact.	True	708604
Sample custody seals, if present, are intact.	True	
The cooler or samples do not appear to have been compromised or tampered with.	True	
Samples were received on ice.	True	
Cooler Temperature is acceptable.	True	
Cooler Temperature is recorded.	True	5.4ºC IR GUN ID 181. CF 0
COC is present.	True	
COC is filled out in ink and legible.	True	
COC is filled out with all pertinent information.	True	
Is the Field Sampler's name present on COC?	N/A	Received project as a subcontract.
There are no discrepancies between the containers received and the COC.	True	
Samples are received within Holding Time.	True	
Sample containers have legible labels.	True	
Containers are not broken or leaking.	True	
Sample collection date/times are provided.	True	
Appropriate sample containers are used.	True	
Sample bottles are completely filled.	True	
Sample Preservation Verified.	True	
There is sufficient vol. for all requested analyses, incl. any requested MS/MSDs	True	
Containers requiring zero headspace have no headspace or bubble is <6mm (1/4").	True	
Multiphasic samples are not present.	True	
Samples do not require splitting or compositing.	True	
Residual Chlorine Checked.	N/A	Check done at department level as required.

TestAmerica Westfield
Westfield Executive Park 53 Southampton Road
Westfield, MA 01085
Phone (413) 572-4000 Fax (413) 572-3707

Boston Service Center
240 Bear Hill Rd. Suite 104
Waltham, MA 02451
Phone (781) 466-6900 Fax (781) 466-6901

Chain of Custody Record

TestAmerica
THE LEADER IN ENVIRONMENTAL TESTING

Client Information
Client Contact: Jason Flattery
Company: ERM
Address: 1 Beacon St, 5th Floor
City: Boston
State, Zip: MA 02108
Phone: 617-447-0757
Email: Jason.Flattery@erm.com
Project Name/number: 0167058
Site: Raytheon Wayland

Sampler: Stacey Braga
Phone: 978-875-0426
Lab PM:
E-Mail:
Carrier Tracking No(s):
COC No: 22961
Page: 1/2
Job #: 480-34934

Due Date Requested:
TAT Requested (days):
Quote #:
PO #:
WO #:
SSOW#:

Analysis Requested

Preservation Codes:
A - HCL; B - NaOH; C - Zn Acetate; D - Nitric Acid; E - NaHSO4; F - MeOH; H - Ascorbic Acid; I - Ice; J - DI Water; M - Hexane; N - None; P - Na2O4S; Q - Na2SO3; R - Na2S2SO3; S - H2SO4; Z - other (specify)

Regulatory programs:
MCP ☒ GW1/S1 ☐
RCP ☐ CT RSR ☐
DEP Form ☐ EDD Required ☐

Sample Identification	Sample Date	Sample Time	Sample Type (C=Comp, G=grab)	Matrix (W=water, S=soild, O=waste/oil, BT=Tissue, A=Air)	Sampler's Initials	Field Filtered Sample?	Perform MS/MSD?	8260 HCP	8260 SIM 1,4 Dioxane	522 1,4 Dioxane	Total Number of containers	Special Instructions/Note:
			Preservation Code:									
MW1024D-20130322-01	3/22/13	10:20		W	SC			3	2	1		
MW1016D-20130322-01	3/22/13	9:15		W	SC			3				
MW1016D-20130322-01-MS	3/22/13	9:15		W	SC			3				
MW1016D-20130322-01-MSD	3/22/13	9:15		W	SC			3				
MW1003-20130322-01	3/22/13	11:25		W	SC			3				
MW1014-20130322-01	3/22/13	10:55		W	SC			3				
MW1026D-20130322-01	3/22/13	11:00		W	SB			3	2	1		
MW1013-20130322-01	3/22/13	9:15		W	SB			3				
MW1002B-20130322-01	3/22/13	10:30		W	CL			3				
MW-1002M-20130322-01	3/22/13	8:45		W	CL			3				

Possible Hazard Identification
☒ Non-Hazard ☐ Flammable ☐ Skin Irritant ☐ Poison B ☐ Unknown ☐ Radiological

Sample Disposal (A fee may be assessed if samples are retained longer than 1 month)
☐ Return To Client ☒ Disposal By Lab ☐ Archive For _____ Months

Deliverable Requested: I, II, III, IV, Other (specify)

Special Instructions/QC Requirements:

Relinquished by:	Date/Time:	Company	Received by:	Date/Time:	Company
[signature]	3/22/13 13:05	ERM	[signature]	3/22/13 1305	TAL
[signature]	3/22/13 1630	TAL	[signature]	3-23-13 0830	TA
Relinquished by:	Date/Time:	Company	Received by:	Date/Time:	Company

Custody Seals Intact: Δ Yes Δ No
Custody Seal No.:
Cooler Temperature(s) °C and Other Remarks: #2 3.4

TAL-8245-360 1111

TestAmerica Westfield
Westfield Executive Park 53 Southampton Road
Westfield, MA 01085
Phone (413) 572-4000 Fax (413) 572-3707

Boston Service Center
240 Bear Hill Rd. Suite 104
Waltham, MA 02451
Phone (781) 466-6900 Fax (781) 466-6901

Chain of Custody Record

TestAmerica
THE LEADER IN ENVIRONMENTAL TESTING

Client Information	Sampler: Stacey Braga	Lab PM:	Carrier Tracking No(s):	COC No: 22955
Client Contact: Jason Flattery	Phone: 978-875-0426	E-Mail:		Page: 2/2
Company: ERM				Job #: 480-34934
Address: 1 Beacon St, 5th Floor	Due Date Requested:			
City: Boston	TAT Requested (days):			
State, Zip: MA 02108				
Phone: 1-617-447-0757	Quote #:			
Email: Jason.Flattery@erm.com	PO #:			
Project Name/number:	WO #:			
Site: Raytheon Wayland	SSOW#:			

Analysis Requested

Preservation Codes:
A - HCL; B - NaOH; C - Zn Acetate; D - Nitric Acid; E - NaHSO4; F - MeOH; H - Ascorbic Acid; I - Ice; J - DI Water; M - Hexane; N - None; P - Na2O4S; Q - Na2SO3; R - Na2S2SO3; S - H2SO4; Z - other (specify)

Regulatory programs:
MCP [X] GW1/S1 [ ]
RCP [ ] CT RSR [ ]
DEP Form [ ] EDD Required [ ]

Sample Identification	Sample Date	Sample Time	Sample Type (C=comp, G=grab)	Matrix (W=water, S=solid, O=waste/oil, BT=Tissue, A=Air)	Sampler's Initials	Field Filtered Sample?	Perform MS/MSD?	8260 MEL	Total Number of containers	Special Instructions/Note:
			Preservation Code:		X	X	X			
TB003 20130322-01	3/22/13			W				/		

Possible Hazard Identification
[X] Non-Hazard [ ] Flammable [ ] Skin Irritant [ ] Poison B [ ] Unknown [ ] Radiological

Sample Disposal (A fee may be assessed if samples are retained longer than 1 month)
[ ] Return To Client [X] Disposal By Lab [ ] Archive For ____ Months

Deliverable Requested: I, II, III, IV, Other (specify)

Special Instructions/QC Requirements:

Relinquished by:	Date/Time:	Company	Received by:	Date/Time:	Company
[signature]	3/22/13 13:05	ERM	[signature]	3/22/13 1305	TAL
[signature]	3/22/13 1630	TAL	[signature]	3-23-13 0830	TAL
Relinquished by:	Date/Time:	Company	Received by:	Date/Time:	Company

Custody Seals Intact: Δ Yes Δ No
Custody Seal No.:
Cooler Temperature(s) °C and Other Remarks: #2 3.4

TAL-8245-360 1111

TestAmerica

THE LEADER IN ENVIRONMENTAL TESTING

ANALYTICAL REPORT

TestAmerica Laboratories, Inc.
TestAmerica Buffalo
10 Hazelwood Drive
Amherst, NY 14228-2298
Tel: (716)691-2600

TestAmerica Job ID: 480-34637-1
Client Project/Site: IDS Wayland

For:
ERM-Northeast
One Beacon Steet
5th Floor
Boston, Massachusetts 02108

Attn: Jason Flattery

Authorized for release by:
3/29/2013 6:48:48 PM

Becky Mason
Project Manager II
becky.mason@testamericainc.com

LINKS

Review your project results through TotalAccess

Have a Question? Ask The Expert

Visit us at: www.testamericainc.com

The test results in this report meet all 2003 NELAC and 2009 TNI requirements for accredited parameters, exceptions are noted in this report. This report may not be reproduced except in full, and with written approval from the laboratory. For questions please contact the Project Manager at the e-mail address or telephone number listed on this page.

This report has been electronically signed and authorized by the signatory. Electronic signature is intended to be the legally binding equivalent of a traditionally handwritten signature.

Results relate only to the items tested and the sample(s) as received by the laboratory.

Table of Contents

Cover Page 1
Table of Contents 2
Definitions/Glossary 3
Case Narrative 4
Detection Summary 6
Client Sample Results 8
Surrogate Summary 24
QC Sample Results 25
QC Association Summary 36
Lab Chronicle 37
Certification Summary 39
Method Summary 41
Sample Summary 42
Receipt Checklists 43
Chain of Custody 45

Qualifiers

GC/MS VOA

Qualifier	Qualifier Description
*	LCS or LCSD exceeds the control limits

Glossary

Abbreviation	These commonly used abbreviations may or may not be present in this report.
¤	Listed under the "D" column to designate that the result is reported on a dry weight basis
%R	Percent Recovery
CNF	Contains no Free Liquid
DER	Duplicate error ratio (normalized absolute difference)
DL, RA, RE, IN	Indicates a Dilution, Re-analysis, Re-extraction, or additional Initial metals/anion analysis of the sample
DLC	Decision level concentration
MDA	Minimum detectable activity
EDL	Estimated Detection Limit
MDC	Minimum detectable concentration
MDL	Method Detection Limit
ML	Minimum Level (Dioxin)
ND	Not detected at the reporting limit (or MDL or EDL if shown)
PQL	Practical Quantitation Limit
QC	Quality Control
RER	Relative error ratio
RL	Reporting Limit or Requested Limit (Radiochemistry)
RPD	Relative Percent Difference, a measure of the relative difference between two points
TEF	Toxicity Equivalent Factor (Dioxin)
TEQ	Toxicity Equivalent Quotient (Dioxin)

Job ID: 480-34637-1

Laboratory: TestAmerica Buffalo

Narrative

Job Narrative
480-34637-1

Comments
No additional comments.

Receipt
The samples were received on 3/20/2013 1:00 AM; the samples arrived in good condition, properly preserved and, where required, on ice. The temperature of the cooler at receipt was 2.4º C.

Except:

Analysis for the following sample was put on hold by the client on 03/19/2013: MW1018-20130319-01 (480-34637-5). Client activated this sample on 3/21/2013.

GC/MS VOA
Method, 8260C: The laboratory control sample (LCS) and / or the laboratory control sample duplicate (LCSD) for batch 108444 exceeded control limits for the following analyte: 2-Butanone (MEK). MCP/RCP protocol allows for 10% of the target compounds to be outside of the limits provided the recoveries are over 10%.

Method 8260C: The following sample(s) was diluted to bring the concentration of target analytes within the calibration range: MW1018-20130319-01 (480-34637-5). Elevated reporting limits (RLs) are provided.

Method 8260C: The laboratory control sample (LCS) and / or the laboratory control sample duplicate (LCSD) for batch 108596 exceeded control limits for the following analytes: 2-Butanone. This is due to the coelution with Ethyl Acetate in the mega mix spike solution.

With the exception of diluted samples, per question G on the MassDEP Analytical Protocol Certification Form, TestAmerica's routine reporting limits do not achieve the CAM reporting limits specified in this CAM protocol for 1,2-dibromo-3-chloropropane, Carbon Disulfide, Isopropyl Ether, Naphthalene, tert-Butyl Ethyl Ether, tert-Amyl Methyl Ether, & Tetrahydrofuran.

No other analytical or quality issues were noted.

GC/MS Semi VOA
No analytical or quality issues were noted.

Organic Prep
No analytical or quality issues were noted.

MassDEP Analytical Protocol Certification Form

Laboratory Name: **TestAmerica Buffalo** Project #: **480-34637-1**

Project Location: **IDS Wayland** RTN:

This form provides certifications for the following data set: list Laboratory Sample ID Number(s):

480-34637-1[1-9]

Matrices: [X] Groundwater/Surface Water [ ] Soil/Sediment [ ] Drinking Water [ ] Air [ ] Other:

CAM Protocols (check all that apply below):

8260 VOC CAM II A [X]	7470/7471 Hg CAM III B [ ]	Mass DEP VPH CAM IV A [ ]	8081 Pesticides CAM V B [ ]	7196 Hex Cr CAM VI B [ ]	Mass DEP APH CAM IX A [ ]
8270 SVOC CAM II B [ ]	6010 Metals CAM III C [ ]	Mass DEP EPH CAM IV B [ ]	8151 Herbicides CAM V C [ ]	8330 Explosives CAM VIII A [ ]	TO-15 VOC CAM IX B [ ]
6010 Metals CAM III A [ ]	6020 Metals CAM III D [ ]	8082 PCB CAM V A [ ]	9014 Total Cyanide/PAC CAM VI A [ ]	6860 Perchlorate CAM VIII B [ ]	

Affirmative Responses to Questions A through F are required for "Presumptive Certainty" status

A	Were all samples received in a condition consistent with those described on the Chain-of-Custody, properly preserved (including temperature) in the field or laboratory, and prepared/analyzed within method holding time.	[X] Yes [ ] No
B	Were the analytical method(s) and all associated QC requirements specified in the selected CAM protocol(s) followed?	[X] Yes [ ] No
C	Were all required corrective actions and analytical response actions specified in the selected CAM protocol(s) implemented for all identified performance standard non-conformances?	[X] Yes [ ] No
D	Does the laboratory report comply with all the reporting requirements specified in CAM VII A, "Quality Assurance and Quality Control Guidelines for the Acquisition and Reporting of Analytical Data"?	[X] Yes [ ] No
E	a. VPH, EPH and APH Methods only: Was each method conducted without significant modification(s)? (Refer to the individual method(s) for a list of significant modifications). b. APH and TO-15 Methods only: Was the complete analyte list reported for each method?	[ ] Yes [ ] No [ ] Yes [ ] No
F	Were all applicable CAM protocol QC and performance standard non-conformances identified and evaluated in a laboratory narrative (including all "No" responses to Questions A through E)?	[ ] Yes [ ] No

Responses to Questions G, H and I below are required for "Presumptive Certainty" status

G	Were the reporting limits at or below all CAM reporting limits specified in the selected CAM protocol(s)?	[ ] Yes [X] No[1]

***Data User Note:* Data that achieve "Presumptive Certainty" status may not necessarily meet the data usability and representativeness requirements described in 310 CMR 40. 1056 (2)(k) and WCS-07-350**

H	Were **all** QC performance standards specified in the CAM protocol(s) achieved?	[ ] Yes [X] No[1]
I	Were results reported for the complete analyte list specified in the selected CAM protocol(s) ?	[X] Yes [ ] No[1]

[1] All negative responses must be addressed in an attached laboratory narrative.

I, the undersigned, attest under the pains and penalties of perjury that, based upon my personal inquiry of those responsible for obtaining the information, the material contained in this analytical report is, to the best of my knowledge and belief, is accurate and complete.

Signature: Position: Project Manager

Printed Name: Becky Mason Date: 3/29/13 18:44

This form has been electronically signed and approved

Detection Summary

Client: ERM-Northeast
Project/Site: IDS Wayland

TestAmerica Job ID: 480-34637-1

Client Sample ID: MW1020-20130319-01 — Lab Sample ID: 480-34637-1

Analyte	Result	Qualifier	RL	MDL	Unit	Dil Fac	D	Method	Prep Type
1,1,1-Trichloroethane	2.1		1.0		ug/L	1		8260C	Total/NA
Methyl tert-butyl ether	11		1.0		ug/L	1		8260C	Total/NA
Trichloroethene	16		1.0		ug/L	1		8260C	Total/NA
1,4-Dioxane	0.60		0.20		ug/L	1		522 MOD	Total/NA

Client Sample ID: MW1017D-20130319-01 — Lab Sample ID: 480-34637-2

Analyte	Result	Qualifier	RL	MDL	Unit	Dil Fac	D	Method	Prep Type
cis-1,2-Dichloroethene	8.1		1.0		ug/L	1		8260C	Total/NA
Trichloroethene	41		1.0		ug/L	1		8260C	Total/NA

Client Sample ID: MW1008-20130319-01 — Lab Sample ID: 480-34637-3

Analyte	Result	Qualifier	RL	MDL	Unit	Dil Fac	D	Method	Prep Type
Trichloroethene	4.0		1.0		ug/L	1		8260C	Total/NA

Client Sample ID: MW1012-20130319-01 — Lab Sample ID: 480-34637-4

Analyte	Result	Qualifier	RL	MDL	Unit	Dil Fac	D	Method	Prep Type
cis-1,2-Dichloroethene	9.7		1.0		ug/L	1		8260C	Total/NA
Trichloroethene	19		1.0		ug/L	1		8260C	Total/NA

Client Sample ID: MW1018-20130319-01 — Lab Sample ID: 480-34637-5

Analyte	Result	Qualifier	RL	MDL	Unit	Dil Fac	D	Method	Prep Type
1,1,1-Trichloroethane	94		1.0		ug/L	1		8260C	Total/NA
1,1-Dichloroethene	7.3		1.0		ug/L	1		8260C	Total/NA
cis-1,2-Dichloroethene	1.5		1.0		ug/L	1		8260C	Total/NA
Methyl tert-butyl ether	7.6		1.0		ug/L	1		8260C	Total/NA
Trichloroethene - DL	300		5.0		ug/L	5		8260C	Total/NA

Client Sample ID: MW1019B-20130319-01 — Lab Sample ID: 480-34637-6

Analyte	Result	Qualifier	RL	MDL	Unit	Dil Fac	D	Method	Prep Type
cis-1,2-Dichloroethene	5.9		1.0		ug/L	1		8260C	Total/NA
Trichloroethene	26		1.0		ug/L	1		8260C	Total/NA

Client Sample ID: DUP-001-20130319-01 — Lab Sample ID: 480-34637-7

Analyte	Result	Qualifier	RL	MDL	Unit	Dil Fac	D	Method	Prep Type
1,1-Dichloroethane	1.3		1.0		ug/L	1		8260C	Total/NA
1,1-Dichloroethene	1.6		1.0		ug/L	1		8260C	Total/NA
Methyl tert-butyl ether	85		1.0		ug/L	1		8260C	Total/NA
Tert-amyl methyl ether	18		5.0		ug/L	1		8260C	Total/NA
Trichloroethene	11		1.0		ug/L	1		8260C	Total/NA

Client Sample ID: MW1032-20130319-01 — Lab Sample ID: 480-34637-8

Analyte	Result	Qualifier	RL	MDL	Unit	Dil Fac	D	Method	Prep Type
1,1-Dichloroethane	1.3		1.0		ug/L	1		8260C	Total/NA

This Detection Summary does not include radiochemical test results.

Detection Summary

Client: ERM-Northeast
Project/Site: IDS Wayland

TestAmerica Job ID: 480-34637-1

Client Sample ID: MW1032-20130319-01 (Continued) — Lab Sample ID: 480-34637-8

Analyte	Result	Qualifier	RL	MDL	Unit	Dil Fac	D	Method	Prep Type
1,1-Dichloroethene	1.7		1.0		ug/L	1		8260C	Total/NA
Methyl tert-butyl ether	86		1.0		ug/L	1		8260C	Total/NA
Tert-amyl methyl ether	18		5.0		ug/L	1		8260C	Total/NA
Trichloroethene	12		1.0		ug/L	1		8260C	Total/NA

Client Sample ID: MW-1005-20130319-01 — Lab Sample ID: 480-34637-9

Analyte	Result	Qualifier	RL	MDL	Unit	Dil Fac	D	Method	Prep Type
cis-1,2-Dichloroethene	3.2		1.0		ug/L	1		8260C	Total/NA
Tetrachloroethene	1.2		1.0		ug/L	1		8260C	Total/NA
Trichloroethene	17		1.0		ug/L	1		8260C	Total/NA

This Detection Summary does not include radiochemical test results.

Client: ERM-Northeast
Project/Site: IDS Wayland

TestAmerica Job ID: 480-34637-1

Client Sample ID: MW1020-20130319-01
Date Collected: 03/19/13 12:00
Date Received: 03/20/13 01:00

Lab Sample ID: 480-34637-1
Matrix: Water

Method: 8260C - Volatile Organic Compounds (GC/MS)

Analyte	Result	Qualifier	RL	MDL	Unit	D	Prepared	Analyzed	Dil Fac
1,1,1,2-Tetrachloroethane	ND		1.0		ug/L			03/21/13 13:07	1
1,1,1-Trichloroethane	**2.1**		1.0		ug/L			03/21/13 13:07	1
1,1,2,2-Tetrachloroethane	ND		0.50		ug/L			03/21/13 13:07	1
1,1,2-Trichloroethane	ND		1.0		ug/L			03/21/13 13:07	1
1,1-Dichloroethane	ND		1.0		ug/L			03/21/13 13:07	1
1,1-Dichloroethene	ND		1.0		ug/L			03/21/13 13:07	1
1,1-Dichloropropene	ND		1.0		ug/L			03/21/13 13:07	1
1,2,3-Trichlorobenzene	ND		1.0		ug/L			03/21/13 13:07	1
1,2,3-Trichloropropane	ND		1.0		ug/L			03/21/13 13:07	1
1,2,4-Trichlorobenzene	ND		1.0		ug/L			03/21/13 13:07	1
1,2,4-Trimethylbenzene	ND		1.0		ug/L			03/21/13 13:07	1
1,2-Dibromo-3-Chloropropane	ND		5.0		ug/L			03/21/13 13:07	1
1,2-Dichlorobenzene	ND		1.0		ug/L			03/21/13 13:07	1
1,2-Dichloroethane	ND		1.0		ug/L			03/21/13 13:07	1
1,2-Dichloropropane	ND		1.0		ug/L			03/21/13 13:07	1
1,3,5-Trimethylbenzene	ND		1.0		ug/L			03/21/13 13:07	1
1,3-Dichlorobenzene	ND		1.0		ug/L			03/21/13 13:07	1
1,3-Dichloropropane	ND		1.0		ug/L			03/21/13 13:07	1
1,4-Dichlorobenzene	ND		1.0		ug/L			03/21/13 13:07	1
1,4-Dioxane	ND		50		ug/L			03/21/13 13:07	1
2,2-Dichloropropane	ND		1.0		ug/L			03/21/13 13:07	1
2-Butanone (MEK)	ND	*	10		ug/L			03/21/13 13:07	1
2-Chlorotoluene	ND		1.0		ug/L			03/21/13 13:07	1
2-Hexanone	ND		10		ug/L			03/21/13 13:07	1
4-Chlorotoluene	ND		1.0		ug/L			03/21/13 13:07	1
4-Isopropyltoluene	ND		1.0		ug/L			03/21/13 13:07	1
4-Methyl-2-pentanone (MIBK)	ND		10		ug/L			03/21/13 13:07	1
Acetone	ND		50		ug/L			03/21/13 13:07	1
Benzene	ND		1.0		ug/L			03/21/13 13:07	1
Bromobenzene	ND		1.0		ug/L			03/21/13 13:07	1
Bromoform	ND		1.0		ug/L			03/21/13 13:07	1
Bromomethane	ND		2.0		ug/L			03/21/13 13:07	1
Carbon disulfide	ND		10		ug/L			03/21/13 13:07	1
Carbon tetrachloride	ND		1.0		ug/L			03/21/13 13:07	1
Chlorobenzene	ND		1.0		ug/L			03/21/13 13:07	1
Chlorobromomethane	ND		1.0		ug/L			03/21/13 13:07	1
Chlorodibromomethane	ND		0.50		ug/L			03/21/13 13:07	1
Chloroethane	ND		2.0		ug/L			03/21/13 13:07	1
Chloroform	ND		1.0		ug/L			03/21/13 13:07	1
Chloromethane	ND		2.0		ug/L			03/21/13 13:07	1
cis-1,2-Dichloroethene	ND		1.0		ug/L			03/21/13 13:07	1
cis-1,3-Dichloropropene	ND		0.40		ug/L			03/21/13 13:07	1
Dichlorobromomethane	ND		0.50		ug/L			03/21/13 13:07	1
Dichlorodifluoromethane	ND		1.0		ug/L			03/21/13 13:07	1
Ethyl ether	ND		1.0		ug/L			03/21/13 13:07	1
Ethylbenzene	ND		1.0		ug/L			03/21/13 13:07	1
Ethylene Dibromide	ND		1.0		ug/L			03/21/13 13:07	1
Hexachlorobutadiene	ND		0.40		ug/L			03/21/13 13:07	1
Isopropyl ether	ND		10		ug/L			03/21/13 13:07	1

Client Sample ID: MW1020-20130319-01

Lab Sample ID: 480-34637-1

Date Collected: 03/19/13 12:00
Matrix: Water
Date Received: 03/20/13 01:00

Method: 8260C - Volatile Organic Compounds (GC/MS) (Continued)

Analyte	Result	Qualifier	RL	MDL	Unit	D	Prepared	Analyzed	Dil Fac
Isopropylbenzene	ND		1.0		ug/L			03/21/13 13:07	1
Methyl tert-butyl ether	**11**		1.0		ug/L			03/21/13 13:07	1
Methylene Chloride	ND		1.0		ug/L			03/21/13 13:07	1
m-Xylene & p-Xylene	ND		2.0		ug/L			03/21/13 13:07	1
Naphthalene	ND		5.0		ug/L			03/21/13 13:07	1
n-Butylbenzene	ND		1.0		ug/L			03/21/13 13:07	1
N-Propylbenzene	ND		1.0		ug/L			03/21/13 13:07	1
o-Xylene	ND		1.0		ug/L			03/21/13 13:07	1
sec-Butylbenzene	ND		1.0		ug/L			03/21/13 13:07	1
Styrene	ND		1.0		ug/L			03/21/13 13:07	1
Tert-amyl methyl ether	ND		5.0		ug/L			03/21/13 13:07	1
Tert-butyl ethyl ether	ND		5.0		ug/L			03/21/13 13:07	1
tert-Butylbenzene	ND		1.0		ug/L			03/21/13 13:07	1
Tetrachloroethene	ND		1.0		ug/L			03/21/13 13:07	1
Tetrahydrofuran	ND		10		ug/L			03/21/13 13:07	1
Toluene	ND		1.0		ug/L			03/21/13 13:07	1
trans-1,2-Dichloroethene	ND		1.0		ug/L			03/21/13 13:07	1
trans-1,3-Dichloropropene	ND		0.40		ug/L			03/21/13 13:07	1
Trichloroethene	**16**		1.0		ug/L			03/21/13 13:07	1
Trichlorofluoromethane	ND		1.0		ug/L			03/21/13 13:07	1
Vinyl chloride	ND		0.50		ug/L			03/21/13 13:07	1
Dibromomethane	ND		1.0		ug/L			03/21/13 13:07	1

Surrogate	*%Recovery*	*Qualifier*	*Limits*	*Prepared*	*Analyzed*	*Dil Fac*
Toluene-d8 (Surr)	*97*		*70 - 130*		*03/21/13 13:07*	*1*
1,2-Dichloroethane-d4 (Surr)	*96*		*70 - 130*		*03/21/13 13:07*	*1*
4-Bromofluorobenzene (Surr)	*99*		*70 - 130*		*03/21/13 13:07*	*1*

Method: 522 MOD - 1,4 Dioxane (GC/MS SIM)

Analyte	Result	Qualifier	RL	MDL	Unit	D	Prepared	Analyzed	Dil Fac
1,4-Dioxane	**0.60**		0.20		ug/L		03/27/13 14:05	03/27/13 18:27	1

Surrogate	*%Recovery*	*Qualifier*	*Limits*	*Prepared*	*Analyzed*	*Dil Fac*
1,4-Dioxane-d8 (Surr)	*78*		*70 - 130*	*03/27/13 14:05*	*03/27/13 18:27*	*1*

Client Sample ID: MW1017D-20130319-01

Lab Sample ID: 480-34637-2

Date Collected: 03/19/13 14:10
Matrix: Water
Date Received: 03/20/13 01:00

Method: 8260C - Volatile Organic Compounds (GC/MS)

Analyte	Result	Qualifier	RL	MDL	Unit	D	Prepared	Analyzed	Dil Fac
1,1,1,2-Tetrachloroethane	ND		1.0		ug/L			03/22/13 01:25	1
1,1,1-Trichloroethane	ND		1.0		ug/L			03/22/13 01:25	1
1,1,2,2-Tetrachloroethane	ND		0.50		ug/L			03/22/13 01:25	1
1,1,2-Trichloroethane	ND		1.0		ug/L			03/22/13 01:25	1
1,1-Dichloroethane	ND		1.0		ug/L			03/22/13 01:25	1
1,1-Dichloroethene	ND		1.0		ug/L			03/22/13 01:25	1
1,1-Dichloropropene	ND		1.0		ug/L			03/22/13 01:25	1
1,2,3-Trichlorobenzene	ND		1.0		ug/L			03/22/13 01:25	1
1,2,3-Trichloropropane	ND		1.0		ug/L			03/22/13 01:25	1

Client Sample ID: MW1017D-20130319-01
Date Collected: 03/19/13 14:10
Date Received: 03/20/13 01:00

Lab Sample ID: 480-34637-2
Matrix: Water

Method: 8260C - Volatile Organic Compounds (GC/MS) (Continued)

Analyte	Result	Qualifier	RL	MDL	Unit	D	Prepared	Analyzed	Dil Fac
1,2,4-Trichlorobenzene	ND		1.0		ug/L			03/22/13 01:25	1
1,2,4-Trimethylbenzene	ND		1.0		ug/L			03/22/13 01:25	1
1,2-Dibromo-3-Chloropropane	ND		5.0		ug/L			03/22/13 01:25	1
1,2-Dichlorobenzene	ND		1.0		ug/L			03/22/13 01:25	1
1,2-Dichloroethane	ND		1.0		ug/L			03/22/13 01:25	1
1,2-Dichloropropane	ND		1.0		ug/L			03/22/13 01:25	1
1,3,5-Trimethylbenzene	ND		1.0		ug/L			03/22/13 01:25	1
1,3-Dichlorobenzene	ND		1.0		ug/L			03/22/13 01:25	1
1,3-Dichloropropane	ND		1.0		ug/L			03/22/13 01:25	1
1,4-Dichlorobenzene	ND		1.0		ug/L			03/22/13 01:25	1
1,4-Dioxane	ND		50		ug/L			03/22/13 01:25	1
2,2-Dichloropropane	ND		1.0		ug/L			03/22/13 01:25	1
2-Butanone (MEK)	ND	*	10		ug/L			03/22/13 01:25	1
2-Chlorotoluene	ND		1.0		ug/L			03/22/13 01:25	1
2-Hexanone	ND		10		ug/L			03/22/13 01:25	1
4-Chlorotoluene	ND		1.0		ug/L			03/22/13 01:25	1
4-Isopropyltoluene	ND		1.0		ug/L			03/22/13 01:25	1
4-Methyl-2-pentanone (MIBK)	ND		10		ug/L			03/22/13 01:25	1
Acetone	ND		50		ug/L			03/22/13 01:25	1
Benzene	ND		1.0		ug/L			03/22/13 01:25	1
Bromobenzene	ND		1.0		ug/L			03/22/13 01:25	1
Bromoform	ND		1.0		ug/L			03/22/13 01:25	1
Bromomethane	ND		2.0		ug/L			03/22/13 01:25	1
Carbon disulfide	ND		10		ug/L			03/22/13 01:25	1
Carbon tetrachloride	ND		1.0		ug/L			03/22/13 01:25	1
Chlorobenzene	ND		1.0		ug/L			03/22/13 01:25	1
Chlorobromomethane	ND		1.0		ug/L			03/22/13 01:25	1
Chlorodibromomethane	ND		0.50		ug/L			03/22/13 01:25	1
Chloroethane	ND		2.0		ug/L			03/22/13 01:25	1
Chloroform	ND		1.0		ug/L			03/22/13 01:25	1
Chloromethane	ND		2.0		ug/L			03/22/13 01:25	1
cis-1,2-Dichloroethene	**8.1**		1.0		ug/L			03/22/13 01:25	1
cis-1,3-Dichloropropene	ND		0.40		ug/L			03/22/13 01:25	1
Dichlorobromomethane	ND		0.50		ug/L			03/22/13 01:25	1
Dichlorodifluoromethane	ND		1.0		ug/L			03/22/13 01:25	1
Ethyl ether	ND		1.0		ug/L			03/22/13 01:25	1
Ethylbenzene	ND		1.0		ug/L			03/22/13 01:25	1
Ethylene Dibromide	ND		1.0		ug/L			03/22/13 01:25	1
Hexachlorobutadiene	ND		0.40		ug/L			03/22/13 01:25	1
Isopropyl ether	ND		10		ug/L			03/22/13 01:25	1
Isopropylbenzene	ND		1.0		ug/L			03/22/13 01:25	1
Methyl tert-butyl ether	ND		1.0		ug/L			03/22/13 01:25	1
Methylene Chloride	ND		1.0		ug/L			03/22/13 01:25	1
m-Xylene & p-Xylene	ND		2.0		ug/L			03/22/13 01:25	1
Naphthalene	ND		5.0		ug/L			03/22/13 01:25	1
n-Butylbenzene	ND		1.0		ug/L			03/22/13 01:25	1
N-Propylbenzene	ND		1.0		ug/L			03/22/13 01:25	1
o-Xylene	ND		1.0		ug/L			03/22/13 01:25	1
sec-Butylbenzene	ND		1.0		ug/L			03/22/13 01:25	1

Client Sample ID: MW1017D-20130319-01

Lab Sample ID: 480-34637-2

Date Collected: 03/19/13 14:10

Matrix: Water

Date Received: 03/20/13 01:00

Method: 8260C - Volatile Organic Compounds (GC/MS) (Continued)

Analyte	Result	Qualifier	RL	MDL	Unit	D	Prepared	Analyzed	Dil Fac
Styrene	ND		1.0		ug/L			03/22/13 01:25	1
Tert-amyl methyl ether	ND		5.0		ug/L			03/22/13 01:25	1
Tert-butyl ethyl ether	ND		5.0		ug/L			03/22/13 01:25	1
tert-Butylbenzene	ND		1.0		ug/L			03/22/13 01:25	1
Tetrachloroethene	ND		1.0		ug/L			03/22/13 01:25	1
Tetrahydrofuran	ND		10		ug/L			03/22/13 01:25	1
Toluene	ND		1.0		ug/L			03/22/13 01:25	1
trans-1,2-Dichloroethene	ND		1.0		ug/L			03/22/13 01:25	1
trans-1,3-Dichloropropene	ND		0.40		ug/L			03/22/13 01:25	1
Trichloroethene	**41**		1.0		ug/L			03/22/13 01:25	1
Trichlorofluoromethane	ND		1.0		ug/L			03/22/13 01:25	1
Vinyl chloride	ND		0.50		ug/L			03/22/13 01:25	1
Dibromomethane	ND		1.0		ug/L			03/22/13 01:25	1

Surrogate	*%Recovery*	*Qualifier*	*Limits*	*Prepared*	*Analyzed*	*Dil Fac*
Toluene-d8 (Surr)	*96*		*70 - 130*		*03/22/13 01:25*	*1*
1,2-Dichloroethane-d4 (Surr)	*94*		*70 - 130*		*03/22/13 01:25*	*1*
4-Bromofluorobenzene (Surr)	*98*		*70 - 130*		*03/22/13 01:25*	*1*

Client Sample ID: MW1008-20130319-01

Lab Sample ID: 480-34637-3

Date Collected: 03/19/13 11:45

Matrix: Water

Date Received: 03/20/13 01:00

Method: 8260C - Volatile Organic Compounds (GC/MS)

Analyte	Result	Qualifier	RL	MDL	Unit	D	Prepared	Analyzed	Dil Fac
1,1,1,2-Tetrachloroethane	ND		1.0		ug/L			03/21/13 13:55	1
1,1,1-Trichloroethane	ND		1.0		ug/L			03/21/13 13:55	1
1,1,2,2-Tetrachloroethane	ND		0.50		ug/L			03/21/13 13:55	1
1,1,2-Trichloroethane	ND		1.0		ug/L			03/21/13 13:55	1
1,1-Dichloroethane	ND		1.0		ug/L			03/21/13 13:55	1
1,1-Dichloroethene	ND		1.0		ug/L			03/21/13 13:55	1
1,1-Dichloropropene	ND		1.0		ug/L			03/21/13 13:55	1
1,2,3-Trichlorobenzene	ND		1.0		ug/L			03/21/13 13:55	1
1,2,3-Trichloropropane	ND		1.0		ug/L			03/21/13 13:55	1
1,2,4-Trichlorobenzene	ND		1.0		ug/L			03/21/13 13:55	1
1,2,4-Trimethylbenzene	ND		1.0		ug/L			03/21/13 13:55	1
1,2-Dibromo-3-Chloropropane	ND		5.0		ug/L			03/21/13 13:55	1
1,2-Dichlorobenzene	ND		1.0		ug/L			03/21/13 13:55	1
1,2-Dichloroethane	ND		1.0		ug/L			03/21/13 13:55	1
1,2-Dichloropropane	ND		1.0		ug/L			03/21/13 13:55	1
1,3,5-Trimethylbenzene	ND		1.0		ug/L			03/21/13 13:55	1
1,3-Dichlorobenzene	ND		1.0		ug/L			03/21/13 13:55	1
1,3-Dichloropropane	ND		1.0		ug/L			03/21/13 13:55	1
1,4-Dichlorobenzene	ND		1.0		ug/L			03/21/13 13:55	1
1,4-Dioxane	ND		50		ug/L			03/21/13 13:55	1
2,2-Dichloropropane	ND		1.0		ug/L			03/21/13 13:55	1
2-Butanone (MEK)	ND	*	10		ug/L			03/21/13 13:55	1
2-Chlorotoluene	ND		1.0		ug/L			03/21/13 13:55	1
2-Hexanone	ND		10		ug/L			03/21/13 13:55	1
4-Chlorotoluene	ND		1.0		ug/L			03/21/13 13:55	1

Client Sample ID: MW1008-20130319-01
Date Collected: 03/19/13 11:45
Date Received: 03/20/13 01:00

Lab Sample ID: 480-34637-3
Matrix: Water

Method: 8260C - Volatile Organic Compounds (GC/MS) (Continued)

Analyte	Result	Qualifier	RL	MDL	Unit	D	Prepared	Analyzed	Dil Fac
4-Isopropyltoluene	ND		1.0		ug/L			03/21/13 13:55	1
4-Methyl-2-pentanone (MIBK)	ND		10		ug/L			03/21/13 13:55	1
Acetone	ND		50		ug/L			03/21/13 13:55	1
Benzene	ND		1.0		ug/L			03/21/13 13:55	1
Bromobenzene	ND		1.0		ug/L			03/21/13 13:55	1
Bromoform	ND		1.0		ug/L			03/21/13 13:55	1
Bromomethane	ND		2.0		ug/L			03/21/13 13:55	1
Carbon disulfide	ND		10		ug/L			03/21/13 13:55	1
Carbon tetrachloride	ND		1.0		ug/L			03/21/13 13:55	1
Chlorobenzene	ND		1.0		ug/L			03/21/13 13:55	1
Chlorobromomethane	ND		1.0		ug/L			03/21/13 13:55	1
Chlorodibromomethane	ND		0.50		ug/L			03/21/13 13:55	1
Chloroethane	ND		2.0		ug/L			03/21/13 13:55	1
Chloroform	ND		1.0		ug/L			03/21/13 13:55	1
Chloromethane	ND		2.0		ug/L			03/21/13 13:55	1
cis-1,2-Dichloroethene	ND		1.0		ug/L			03/21/13 13:55	1
cis-1,3-Dichloropropene	ND		0.40		ug/L			03/21/13 13:55	1
Dichlorobromomethane	ND		0.50		ug/L			03/21/13 13:55	1
Dichlorodifluoromethane	ND		1.0		ug/L			03/21/13 13:55	1
Ethyl ether	ND		1.0		ug/L			03/21/13 13:55	1
Ethylbenzene	ND		1.0		ug/L			03/21/13 13:55	1
Ethylene Dibromide	ND		1.0		ug/L			03/21/13 13:55	1
Hexachlorobutadiene	ND		0.40		ug/L			03/21/13 13:55	1
Isopropyl ether	ND		10		ug/L			03/21/13 13:55	1
Isopropylbenzene	ND		1.0		ug/L			03/21/13 13:55	1
Methyl tert-butyl ether	ND		1.0		ug/L			03/21/13 13:55	1
Methylene Chloride	ND		1.0		ug/L			03/21/13 13:55	1
m-Xylene & p-Xylene	ND		2.0		ug/L			03/21/13 13:55	1
Naphthalene	ND		5.0		ug/L			03/21/13 13:55	1
n-Butylbenzene	ND		1.0		ug/L			03/21/13 13:55	1
N-Propylbenzene	ND		1.0		ug/L			03/21/13 13:55	1
o-Xylene	ND		1.0		ug/L			03/21/13 13:55	1
sec-Butylbenzene	ND		1.0		ug/L			03/21/13 13:55	1
Styrene	ND		1.0		ug/L			03/21/13 13:55	1
Tert-amyl methyl ether	ND		5.0		ug/L			03/21/13 13:55	1
Tert-butyl ethyl ether	ND		5.0		ug/L			03/21/13 13:55	1
tert-Butylbenzene	ND		1.0		ug/L			03/21/13 13:55	1
Tetrachloroethene	ND		1.0		ug/L			03/21/13 13:55	1
Tetrahydrofuran	ND		10		ug/L			03/21/13 13:55	1
Toluene	ND		1.0		ug/L			03/21/13 13:55	1
trans-1,2-Dichloroethene	ND		1.0		ug/L			03/21/13 13:55	1
trans-1,3-Dichloropropene	ND		0.40		ug/L			03/21/13 13:55	1
Trichloroethene	**4.0**		1.0		ug/L			03/21/13 13:55	1
Trichlorofluoromethane	ND		1.0		ug/L			03/21/13 13:55	1
Vinyl chloride	ND		0.50		ug/L			03/21/13 13:55	1
Dibromomethane	ND		1.0		ug/L			03/21/13 13:55	1

Surrogate	*%Recovery*	*Qualifier*	*Limits*	*Prepared*	*Analyzed*	*Dil Fac*
Toluene-d8 (Surr)	*97*		*70 - 130*		*03/21/13 13:55*	*1*
1,2-Dichloroethane-d4 (Surr)	*97*		*70 - 130*		*03/21/13 13:55*	*1*

Client Sample ID: MW1008-20130319-01

Lab Sample ID: 480-34637-3

Date Collected: 03/19/13 11:45

Matrix: Water

Date Received: 03/20/13 01:00

Method: 8260C - Volatile Organic Compounds (GC/MS) (Continued)

Surrogate	*%Recovery*	*Qualifier*	*Limits*	*Prepared*	*Analyzed*	*Dil Fac*
4-Bromofluorobenzene (Surr)	*103*		*70 - 130*		*03/21/13 13:55*	*1*

Client Sample ID: MW1012-20130319-01

Lab Sample ID: 480-34637-4

Date Collected: 03/19/13 10:30

Matrix: Water

Date Received: 03/20/13 01:00

Method: 8260C - Volatile Organic Compounds (GC/MS)

Analyte	Result	Qualifier	RL	MDL	Unit	D	Prepared	Analyzed	Dil Fac
1,1,1,2-Tetrachloroethane	ND		1.0		ug/L			03/21/13 14:18	1
1,1,1-Trichloroethane	ND		1.0		ug/L			03/21/13 14:18	1
1,1,2,2-Tetrachloroethane	ND		0.50		ug/L			03/21/13 14:18	1
1,1,2-Trichloroethane	ND		1.0		ug/L			03/21/13 14:18	1
1,1-Dichloroethane	ND		1.0		ug/L			03/21/13 14:18	1
1,1-Dichloroethene	ND		1.0		ug/L			03/21/13 14:18	1
1,1-Dichloropropene	ND		1.0		ug/L			03/21/13 14:18	1
1,2,3-Trichlorobenzene	ND		1.0		ug/L			03/21/13 14:18	1
1,2,3-Trichloropropane	ND		1.0		ug/L			03/21/13 14:18	1
1,2,4-Trichlorobenzene	ND		1.0		ug/L			03/21/13 14:18	1
1,2,4-Trimethylbenzene	ND		1.0		ug/L			03/21/13 14:18	1
1,2-Dibromo-3-Chloropropane	ND		5.0		ug/L			03/21/13 14:18	1
1,2-Dichlorobenzene	ND		1.0		ug/L			03/21/13 14:18	1
1,2-Dichloroethane	ND		1.0		ug/L			03/21/13 14:18	1
1,2-Dichloropropane	ND		1.0		ug/L			03/21/13 14:18	1
1,3,5-Trimethylbenzene	ND		1.0		ug/L			03/21/13 14:18	1
1,3-Dichlorobenzene	ND		1.0		ug/L			03/21/13 14:18	1
1,3-Dichloropropane	ND		1.0		ug/L			03/21/13 14:18	1
1,4-Dichlorobenzene	ND		1.0		ug/L			03/21/13 14:18	1
1,4-Dioxane	ND		50		ug/L			03/21/13 14:18	1
2,2-Dichloropropane	ND		1.0		ug/L			03/21/13 14:18	1
2-Butanone (MEK)	ND	*	10		ug/L			03/21/13 14:18	1
2-Chlorotoluene	ND		1.0		ug/L			03/21/13 14:18	1
2-Hexanone	ND		10		ug/L			03/21/13 14:18	1
4-Chlorotoluene	ND		1.0		ug/L			03/21/13 14:18	1
4-Isopropyltoluene	ND		1.0		ug/L			03/21/13 14:18	1
4-Methyl-2-pentanone (MIBK)	ND		10		ug/L			03/21/13 14:18	1
Acetone	ND		50		ug/L			03/21/13 14:18	1
Benzene	ND		1.0		ug/L			03/21/13 14:18	1
Bromobenzene	ND		1.0		ug/L			03/21/13 14:18	1
Bromoform	ND		1.0		ug/L			03/21/13 14:18	1
Bromomethane	ND		2.0		ug/L			03/21/13 14:18	1
Carbon disulfide	ND		10		ug/L			03/21/13 14:18	1
Carbon tetrachloride	ND		1.0		ug/L			03/21/13 14:18	1
Chlorobenzene	ND		1.0		ug/L			03/21/13 14:18	1
Chlorobromomethane	ND		1.0		ug/L			03/21/13 14:18	1
Chlorodibromomethane	ND		0.50		ug/L			03/21/13 14:18	1
Chloroethane	ND		2.0		ug/L			03/21/13 14:18	1
Chloroform	ND		1.0		ug/L			03/21/13 14:18	1
Chloromethane	ND		2.0		ug/L			03/21/13 14:18	1
cis-1,2-Dichloroethene	**9.7**		1.0		ug/L			03/21/13 14:18	1

Client Sample ID: MW1012-20130319-01

Lab Sample ID: 480-34637-4

Date Collected: 03/19/13 10:30

Matrix: Water

Date Received: 03/20/13 01:00

Method: 8260C - Volatile Organic Compounds (GC/MS) (Continued)

Analyte	Result	Qualifier	RL	MDL	Unit	D	Prepared	Analyzed	Dil Fac
cis-1,3-Dichloropropene	ND		0.40		ug/L			03/21/13 14:18	1
Dichlorobromomethane	ND		0.50		ug/L			03/21/13 14:18	1
Dichlorodifluoromethane	ND		1.0		ug/L			03/21/13 14:18	1
Ethyl ether	ND		1.0		ug/L			03/21/13 14:18	1
Ethylbenzene	ND		1.0		ug/L			03/21/13 14:18	1
Ethylene Dibromide	ND		1.0		ug/L			03/21/13 14:18	1
Hexachlorobutadiene	ND		0.40		ug/L			03/21/13 14:18	1
Isopropyl ether	ND		10		ug/L			03/21/13 14:18	1
Isopropylbenzene	ND		1.0		ug/L			03/21/13 14:18	1
Methyl tert-butyl ether	ND		1.0		ug/L			03/21/13 14:18	1
Methylene Chloride	ND		1.0		ug/L			03/21/13 14:18	1
m-Xylene & p-Xylene	ND		2.0		ug/L			03/21/13 14:18	1
Naphthalene	ND		5.0		ug/L			03/21/13 14:18	1
n-Butylbenzene	ND		1.0		ug/L			03/21/13 14:18	1
N-Propylbenzene	ND		1.0		ug/L			03/21/13 14:18	1
o-Xylene	ND		1.0		ug/L			03/21/13 14:18	1
sec-Butylbenzene	ND		1.0		ug/L			03/21/13 14:18	1
Styrene	ND		1.0		ug/L			03/21/13 14:18	1
Tert-amyl methyl ether	ND		5.0		ug/L			03/21/13 14:18	1
Tert-butyl ethyl ether	ND		5.0		ug/L			03/21/13 14:18	1
tert-Butylbenzene	ND		1.0		ug/L			03/21/13 14:18	1
Tetrachloroethene	ND		1.0		ug/L			03/21/13 14:18	1
Tetrahydrofuran	ND		10		ug/L			03/21/13 14:18	1
Toluene	ND		1.0		ug/L			03/21/13 14:18	1
trans-1,2-Dichloroethene	ND		1.0		ug/L			03/21/13 14:18	1
trans-1,3-Dichloropropene	ND		0.40		ug/L			03/21/13 14:18	1
Trichloroethene	**19**		1.0		ug/L			03/21/13 14:18	1
Trichlorofluoromethane	ND		1.0		ug/L			03/21/13 14:18	1
Vinyl chloride	ND		0.50		ug/L			03/21/13 14:18	1
Dibromomethane	ND		1.0		ug/L			03/21/13 14:18	1

Surrogate	*%Recovery*	*Qualifier*	*Limits*	*Prepared*	*Analyzed*	*Dil Fac*
Toluene-d8 (Surr)	*96*		*70 - 130*		*03/21/13 14:18*	*1*
1,2-Dichloroethane-d4 (Surr)	*97*		*70 - 130*		*03/21/13 14:18*	*1*
4-Bromofluorobenzene (Surr)	*100*		*70 - 130*		*03/21/13 14:18*	*1*

Client Sample ID: MW1018-20130319-01

Lab Sample ID: 480-34637-5

Date Collected: 03/19/13 13:40

Matrix: Water

Date Received: 03/20/13 01:00

Method: 8260C - Volatile Organic Compounds (GC/MS)

Analyte	Result	Qualifier	RL	MDL	Unit	D	Prepared	Analyzed	Dil Fac
1,1,1,2-Tetrachloroethane	ND		1.0		ug/L			03/21/13 14:42	1
1,1,1-Trichloroethane	**94**		1.0		ug/L			03/21/13 14:42	1
1,1,2,2-Tetrachloroethane	ND		0.50		ug/L			03/21/13 14:42	1
1,1,2-Trichloroethane	ND		1.0		ug/L			03/21/13 14:42	1
1,1-Dichloroethane	ND		1.0		ug/L			03/21/13 14:42	1
1,1-Dichloroethene	**7.3**		1.0		ug/L			03/21/13 14:42	1
1,1-Dichloropropene	ND		1.0		ug/L			03/21/13 14:42	1
1,2,3-Trichlorobenzene	ND		1.0		ug/L			03/21/13 14:42	1

Client Sample ID: MW1018-20130319-01
Date Collected: 03/19/13 13:40
Date Received: 03/20/13 01:00

Lab Sample ID: 480-34637-5
Matrix: Water

Method: 8260C - Volatile Organic Compounds (GC/MS) (Continued)

Analyte	Result	Qualifier	RL	MDL	Unit	D	Prepared	Analyzed	Dil Fac
1,2,3-Trichloropropane	ND		1.0		ug/L			03/21/13 14:42	1
1,2,4-Trichlorobenzene	ND		1.0		ug/L			03/21/13 14:42	1
1,2,4-Trimethylbenzene	ND		1.0		ug/L			03/21/13 14:42	1
1,2-Dibromo-3-Chloropropane	ND		5.0		ug/L			03/21/13 14:42	1
1,2-Dichlorobenzene	ND		1.0		ug/L			03/21/13 14:42	1
1,2-Dichloroethane	ND		1.0		ug/L			03/21/13 14:42	1
1,2-Dichloropropane	ND		1.0		ug/L			03/21/13 14:42	1
1,3,5-Trimethylbenzene	ND		1.0		ug/L			03/21/13 14:42	1
1,3-Dichlorobenzene	ND		1.0		ug/L			03/21/13 14:42	1
1,3-Dichloropropane	ND		1.0		ug/L			03/21/13 14:42	1
1,4-Dichlorobenzene	ND		1.0		ug/L			03/21/13 14:42	1
1,4-Dioxane	ND		50		ug/L			03/21/13 14:42	1
2,2-Dichloropropane	ND		1.0		ug/L			03/21/13 14:42	1
2-Butanone (MEK)	ND	*	10		ug/L			03/21/13 14:42	1
2-Chlorotoluene	ND		1.0		ug/L			03/21/13 14:42	1
2-Hexanone	ND		10		ug/L			03/21/13 14:42	1
4-Chlorotoluene	ND		1.0		ug/L			03/21/13 14:42	1
4-Isopropyltoluene	ND		1.0		ug/L			03/21/13 14:42	1
4-Methyl-2-pentanone (MIBK)	ND		10		ug/L			03/21/13 14:42	1
Acetone	ND		50		ug/L			03/21/13 14:42	1
Benzene	ND		1.0		ug/L			03/21/13 14:42	1
Bromobenzene	ND		1.0		ug/L			03/21/13 14:42	1
Bromoform	ND		1.0		ug/L			03/21/13 14:42	1
Bromomethane	ND		2.0		ug/L			03/21/13 14:42	1
Carbon disulfide	ND		10		ug/L			03/21/13 14:42	1
Carbon tetrachloride	ND		1.0		ug/L			03/21/13 14:42	1
Chlorobenzene	ND		1.0		ug/L			03/21/13 14:42	1
Chlorobromomethane	ND		1.0		ug/L			03/21/13 14:42	1
Chlorodibromomethane	ND		0.50		ug/L			03/21/13 14:42	1
Chloroethane	ND		2.0		ug/L			03/21/13 14:42	1
Chloroform	ND		1.0		ug/L			03/21/13 14:42	1
Chloromethane	ND		2.0		ug/L			03/21/13 14:42	1
cis-1,2-Dichloroethene	**1.5**		1.0		ug/L			03/21/13 14:42	1
cis-1,3-Dichloropropene	ND		0.40		ug/L			03/21/13 14:42	1
Dichlorobromomethane	ND		0.50		ug/L			03/21/13 14:42	1
Dichlorodifluoromethane	ND		1.0		ug/L			03/21/13 14:42	1
Ethyl ether	ND		1.0		ug/L			03/21/13 14:42	1
Ethylbenzene	ND		1.0		ug/L			03/21/13 14:42	1
Ethylene Dibromide	ND		1.0		ug/L			03/21/13 14:42	1
Hexachlorobutadiene	ND		0.40		ug/L			03/21/13 14:42	1
Isopropyl ether	ND		10		ug/L			03/21/13 14:42	1
Isopropylbenzene	ND		1.0		ug/L			03/21/13 14:42	1
Methyl tert-butyl ether	**7.6**		1.0		ug/L			03/21/13 14:42	1
Methylene Chloride	ND		1.0		ug/L			03/21/13 14:42	1
m-Xylene & p-Xylene	ND		2.0		ug/L			03/21/13 14:42	1
Naphthalene	ND		5.0		ug/L			03/21/13 14:42	1
n-Butylbenzene	ND		1.0		ug/L			03/21/13 14:42	1
N-Propylbenzene	ND		1.0		ug/L			03/21/13 14:42	1
o-Xylene	ND		1.0		ug/L			03/21/13 14:42	1

Client Sample ID: MW1018-20130319-01

Lab Sample ID: 480-34637-5

Date Collected: 03/19/13 13:40

Matrix: Water

Date Received: 03/20/13 01:00

Method: 8260C - Volatile Organic Compounds (GC/MS) (Continued)

Analyte	Result	Qualifier	RL	MDL	Unit	D	Prepared	Analyzed	Dil Fac
sec-Butylbenzene	ND		1.0		ug/L			03/21/13 14:42	1
Styrene	ND		1.0		ug/L			03/21/13 14:42	1
Tert-amyl methyl ether	ND		5.0		ug/L			03/21/13 14:42	1
Tert-butyl ethyl ether	ND		5.0		ug/L			03/21/13 14:42	1
tert-Butylbenzene	ND		1.0		ug/L			03/21/13 14:42	1
Tetrachloroethene	ND		1.0		ug/L			03/21/13 14:42	1
Tetrahydrofuran	ND		10		ug/L			03/21/13 14:42	1
Toluene	ND		1.0		ug/L			03/21/13 14:42	1
trans-1,2-Dichloroethene	ND		1.0		ug/L			03/21/13 14:42	1
trans-1,3-Dichloropropene	ND		0.40		ug/L			03/21/13 14:42	1
Trichlorofluoromethane	ND		1.0		ug/L			03/21/13 14:42	1
Vinyl chloride	ND		0.50		ug/L			03/21/13 14:42	1
Dibromomethane	ND		1.0		ug/L			03/21/13 14:42	1

Surrogate	*%Recovery*	*Qualifier*	*Limits*	*Prepared*	*Analyzed*	*Dil Fac*
Toluene-d8 (Surr)	*96*		*70 - 130*		*03/21/13 14:42*	*1*
1,2-Dichloroethane-d4 (Surr)	*97*		*70 - 130*		*03/21/13 14:42*	*1*
4-Bromofluorobenzene (Surr)	*99*		*70 - 130*		*03/21/13 14:42*	*1*

Method: 8260C - Volatile Organic Compounds (GC/MS) - DL

Analyte	Result	Qualifier	RL	MDL	Unit	D	Prepared	Analyzed	Dil Fac
Trichloroethene	**300**		5.0		ug/L			03/22/13 01:48	5

Surrogate	*%Recovery*	*Qualifier*	*Limits*	*Prepared*	*Analyzed*	*Dil Fac*
Toluene-d8 (Surr)	*98*		*70 - 130*		*03/22/13 01:48*	*5*
1,2-Dichloroethane-d4 (Surr)	*95*		*70 - 130*		*03/22/13 01:48*	*5*
4-Bromofluorobenzene (Surr)	*101*		*70 - 130*		*03/22/13 01:48*	*5*

Client Sample ID: MW1019B-20130319-01

Lab Sample ID: 480-34637-6

Date Collected: 03/19/13 13:55

Matrix: Water

Date Received: 03/20/13 01:00

Method: 8260C - Volatile Organic Compounds (GC/MS)

Analyte	Result	Qualifier	RL	MDL	Unit	D	Prepared	Analyzed	Dil Fac
1,1,1,2-Tetrachloroethane	ND		1.0		ug/L			03/21/13 15:06	1
1,1,1-Trichloroethane	ND		1.0		ug/L			03/21/13 15:06	1
1,1,2,2-Tetrachloroethane	ND		0.50		ug/L			03/21/13 15:06	1
1,1,2-Trichloroethane	ND		1.0		ug/L			03/21/13 15:06	1
1,1-Dichloroethane	ND		1.0		ug/L			03/21/13 15:06	1
1,1-Dichloroethene	ND		1.0		ug/L			03/21/13 15:06	1
1,1-Dichloropropene	ND		1.0		ug/L			03/21/13 15:06	1
1,2,3-Trichlorobenzene	ND		1.0		ug/L			03/21/13 15:06	1
1,2,3-Trichloropropane	ND		1.0		ug/L			03/21/13 15:06	1
1,2,4-Trichlorobenzene	ND		1.0		ug/L			03/21/13 15:06	1
1,2,4-Trimethylbenzene	ND		1.0		ug/L			03/21/13 15:06	1
1,2-Dibromo-3-Chloropropane	ND		5.0		ug/L			03/21/13 15:06	1
1,2-Dichlorobenzene	ND		1.0		ug/L			03/21/13 15:06	1
1,2-Dichloroethane	ND		1.0		ug/L			03/21/13 15:06	1
1,2-Dichloropropane	ND		1.0		ug/L			03/21/13 15:06	1
1,3,5-Trimethylbenzene	ND		1.0		ug/L			03/21/13 15:06	1

Client Sample ID: MW1019B-20130319-01
Date Collected: 03/19/13 13:55
Date Received: 03/20/13 01:00

Lab Sample ID: 480-34637-6
Matrix: Water

Method: 8260C - Volatile Organic Compounds (GC/MS) (Continued)

Analyte	Result	Qualifier	RL	MDL	Unit	D	Prepared	Analyzed	Dil Fac
1,3-Dichlorobenzene	ND		1.0		ug/L			03/21/13 15:06	1
1,3-Dichloropropane	ND		1.0		ug/L			03/21/13 15:06	1
1,4-Dichlorobenzene	ND		1.0		ug/L			03/21/13 15:06	1
1,4-Dioxane	ND		50		ug/L			03/21/13 15:06	1
2,2-Dichloropropane	ND		1.0		ug/L			03/21/13 15:06	1
2-Butanone (MEK)	ND	*	10		ug/L			03/21/13 15:06	1
2-Chlorotoluene	ND		1.0		ug/L			03/21/13 15:06	1
2-Hexanone	ND		10		ug/L			03/21/13 15:06	1
4-Chlorotoluene	ND		1.0		ug/L			03/21/13 15:06	1
4-Isopropyltoluene	ND		1.0		ug/L			03/21/13 15:06	1
4-Methyl-2-pentanone (MIBK)	ND		10		ug/L			03/21/13 15:06	1
Acetone	ND		50		ug/L			03/21/13 15:06	1
Benzene	ND		1.0		ug/L			03/21/13 15:06	1
Bromobenzene	ND		1.0		ug/L			03/21/13 15:06	1
Bromoform	ND		1.0		ug/L			03/21/13 15:06	1
Bromomethane	ND		2.0		ug/L			03/21/13 15:06	1
Carbon disulfide	ND		10		ug/L			03/21/13 15:06	1
Carbon tetrachloride	ND		1.0		ug/L			03/21/13 15:06	1
Chlorobenzene	ND		1.0		ug/L			03/21/13 15:06	1
Chlorobromomethane	ND		1.0		ug/L			03/21/13 15:06	1
Chlorodibromomethane	ND		0.50		ug/L			03/21/13 15:06	1
Chloroethane	ND		2.0		ug/L			03/21/13 15:06	1
Chloroform	ND		1.0		ug/L			03/21/13 15:06	1
Chloromethane	ND		2.0		ug/L			03/21/13 15:06	1
cis-1,2-Dichloroethene	**5.9**		1.0		ug/L			03/21/13 15:06	1
cis-1,3-Dichloropropene	ND		0.40		ug/L			03/21/13 15:06	1
Dichlorobromomethane	ND		0.50		ug/L			03/21/13 15:06	1
Dichlorodifluoromethane	ND		1.0		ug/L			03/21/13 15:06	1
Ethyl ether	ND		1.0		ug/L			03/21/13 15:06	1
Ethylbenzene	ND		1.0		ug/L			03/21/13 15:06	1
Ethylene Dibromide	ND		1.0		ug/L			03/21/13 15:06	1
Hexachlorobutadiene	ND		0.40		ug/L			03/21/13 15:06	1
Isopropyl ether	ND		10		ug/L			03/21/13 15:06	1
Isopropylbenzene	ND		1.0		ug/L			03/21/13 15:06	1
Methyl tert-butyl ether	ND		1.0		ug/L			03/21/13 15:06	1
Methylene Chloride	ND		1.0		ug/L			03/21/13 15:06	1
m-Xylene & p-Xylene	ND		2.0		ug/L			03/21/13 15:06	1
Naphthalene	ND		5.0		ug/L			03/21/13 15:06	1
n-Butylbenzene	ND		1.0		ug/L			03/21/13 15:06	1
N-Propylbenzene	ND		1.0		ug/L			03/21/13 15:06	1
o-Xylene	ND		1.0		ug/L			03/21/13 15:06	1
sec-Butylbenzene	ND		1.0		ug/L			03/21/13 15:06	1
Styrene	ND		1.0		ug/L			03/21/13 15:06	1
Tert-amyl methyl ether	ND		5.0		ug/L			03/21/13 15:06	1
Tert-butyl ethyl ether	ND		5.0		ug/L			03/21/13 15:06	1
tert-Butylbenzene	ND		1.0		ug/L			03/21/13 15:06	1
Tetrachloroethene	ND		1.0		ug/L			03/21/13 15:06	1
Tetrahydrofuran	ND		10		ug/L			03/21/13 15:06	1
Toluene	ND		1.0		ug/L			03/21/13 15:06	1

Client Sample ID: MW1019B-20130319-01

Lab Sample ID: 480-34637-6

Date Collected: 03/19/13 13:55

Matrix: Water

Date Received: 03/20/13 01:00

Method: 8260C - Volatile Organic Compounds (GC/MS) (Continued)

Analyte	Result	Qualifier	RL	MDL	Unit	D	Prepared	Analyzed	Dil Fac
trans-1,2-Dichloroethene	ND		1.0		ug/L			03/21/13 15:06	1
trans-1,3-Dichloropropene	ND		0.40		ug/L			03/21/13 15:06	1
Trichloroethene	**26**		1.0		ug/L			03/21/13 15:06	1
Trichlorofluoromethane	ND		1.0		ug/L			03/21/13 15:06	1
Vinyl chloride	ND		0.50		ug/L			03/21/13 15:06	1
Dibromomethane	ND		1.0		ug/L			03/21/13 15:06	1

Surrogate	*%Recovery*	*Qualifier*	*Limits*	*Prepared*	*Analyzed*	*Dil Fac*
Toluene-d8 (Surr)	*97*		*70 - 130*		*03/21/13 15:06*	*1*
1,2-Dichloroethane-d4 (Surr)	*100*		*70 - 130*		*03/21/13 15:06*	*1*
4-Bromofluorobenzene (Surr)	*101*		*70 - 130*		*03/21/13 15:06*	*1*

Client Sample ID: DUP-001-20130319-01

Lab Sample ID: 480-34637-7

Date Collected: 03/19/13 12:12

Matrix: Water

Date Received: 03/20/13 01:00

Method: 8260C - Volatile Organic Compounds (GC/MS)

Analyte	Result	Qualifier	RL	MDL	Unit	D	Prepared	Analyzed	Dil Fac
1,1,1,2-Tetrachloroethane	ND		1.0		ug/L			03/21/13 15:30	1
1,1,1-Trichloroethane	ND		1.0		ug/L			03/21/13 15:30	1
1,1,2,2-Tetrachloroethane	ND		0.50		ug/L			03/21/13 15:30	1
1,1,2-Trichloroethane	ND		1.0		ug/L			03/21/13 15:30	1
1,1-Dichloroethane	**1.3**		1.0		ug/L			03/21/13 15:30	1
1,1-Dichloroethene	**1.6**		1.0		ug/L			03/21/13 15:30	1
1,1-Dichloropropene	ND		1.0		ug/L			03/21/13 15:30	1
1,2,3-Trichlorobenzene	ND		1.0		ug/L			03/21/13 15:30	1
1,2,3-Trichloropropane	ND		1.0		ug/L			03/21/13 15:30	1
1,2,4-Trichlorobenzene	ND		1.0		ug/L			03/21/13 15:30	1
1,2,4-Trimethylbenzene	ND		1.0		ug/L			03/21/13 15:30	1
1,2-Dibromo-3-Chloropropane	ND		5.0		ug/L			03/21/13 15:30	1
1,2-Dichlorobenzene	ND		1.0		ug/L			03/21/13 15:30	1
1,2-Dichloroethane	ND		1.0		ug/L			03/21/13 15:30	1
1,2-Dichloropropane	ND		1.0		ug/L			03/21/13 15:30	1
1,3,5-Trimethylbenzene	ND		1.0		ug/L			03/21/13 15:30	1
1,3-Dichlorobenzene	ND		1.0		ug/L			03/21/13 15:30	1
1,3-Dichloropropane	ND		1.0		ug/L			03/21/13 15:30	1
1,4-Dichlorobenzene	ND		1.0		ug/L			03/21/13 15:30	1
1,4-Dioxane	ND		50		ug/L			03/21/13 15:30	1
2,2-Dichloropropane	ND		1.0		ug/L			03/21/13 15:30	1
2-Butanone (MEK)	ND	*	10		ug/L			03/21/13 15:30	1
2-Chlorotoluene	ND		1.0		ug/L			03/21/13 15:30	1
2-Hexanone	ND		10		ug/L			03/21/13 15:30	1
4-Chlorotoluene	ND		1.0		ug/L			03/21/13 15:30	1
4-Isopropyltoluene	ND		1.0		ug/L			03/21/13 15:30	1
4-Methyl-2-pentanone (MIBK)	ND		10		ug/L			03/21/13 15:30	1
Acetone	ND		50		ug/L			03/21/13 15:30	1
Benzene	ND		1.0		ug/L			03/21/13 15:30	1
Bromobenzene	ND		1.0		ug/L			03/21/13 15:30	1
Bromoform	ND		1.0		ug/L			03/21/13 15:30	1
Bromomethane	ND		2.0		ug/L			03/21/13 15:30	1

Client Sample ID: DUP-001-20130319-01

Lab Sample ID: 480-34637-7

Date Collected: 03/19/13 12:12

Matrix: Water

Date Received: 03/20/13 01:00

Method: 8260C - Volatile Organic Compounds (GC/MS) (Continued)

Analyte	Result	Qualifier	RL	MDL	Unit	D	Prepared	Analyzed	Dil Fac
Carbon disulfide	ND		10		ug/L			03/21/13 15:30	1
Carbon tetrachloride	ND		1.0		ug/L			03/21/13 15:30	1
Chlorobenzene	ND		1.0		ug/L			03/21/13 15:30	1
Chlorobromomethane	ND		1.0		ug/L			03/21/13 15:30	1
Chlorodibromomethane	ND		0.50		ug/L			03/21/13 15:30	1
Chloroethane	ND		2.0		ug/L			03/21/13 15:30	1
Chloroform	ND		1.0		ug/L			03/21/13 15:30	1
Chloromethane	ND		2.0		ug/L			03/21/13 15:30	1
cis-1,2-Dichloroethene	ND		1.0		ug/L			03/21/13 15:30	1
cis-1,3-Dichloropropene	ND		0.40		ug/L			03/21/13 15:30	1
Dichlorobromomethane	ND		0.50		ug/L			03/21/13 15:30	1
Dichlorodifluoromethane	ND		1.0		ug/L			03/21/13 15:30	1
Ethyl ether	ND		1.0		ug/L			03/21/13 15:30	1
Ethylbenzene	ND		1.0		ug/L			03/21/13 15:30	1
Ethylene Dibromide	ND		1.0		ug/L			03/21/13 15:30	1
Hexachlorobutadiene	ND		0.40		ug/L			03/21/13 15:30	1
Isopropyl ether	ND		10		ug/L			03/21/13 15:30	1
Isopropylbenzene	ND		1.0		ug/L			03/21/13 15:30	1
Methyl tert-butyl ether	**85**		1.0		ug/L			03/21/13 15:30	1
Methylene Chloride	ND		1.0		ug/L			03/21/13 15:30	1
m-Xylene & p-Xylene	ND		2.0		ug/L			03/21/13 15:30	1
Naphthalene	ND		5.0		ug/L			03/21/13 15:30	1
n-Butylbenzene	ND		1.0		ug/L			03/21/13 15:30	1
N-Propylbenzene	ND		1.0		ug/L			03/21/13 15:30	1
o-Xylene	ND		1.0		ug/L			03/21/13 15:30	1
sec-Butylbenzene	ND		1.0		ug/L			03/21/13 15:30	1
Styrene	ND		1.0		ug/L			03/21/13 15:30	1
Tert-amyl methyl ether	**18**		5.0		ug/L			03/21/13 15:30	1
Tert-butyl ethyl ether	ND		5.0		ug/L			03/21/13 15:30	1
tert-Butylbenzene	ND		1.0		ug/L			03/21/13 15:30	1
Tetrachloroethene	ND		1.0		ug/L			03/21/13 15:30	1
Tetrahydrofuran	ND		10		ug/L			03/21/13 15:30	1
Toluene	ND		1.0		ug/L			03/21/13 15:30	1
trans-1,2-Dichloroethene	ND		1.0		ug/L			03/21/13 15:30	1
trans-1,3-Dichloropropene	ND		0.40		ug/L			03/21/13 15:30	1
Trichloroethene	**11**		1.0		ug/L			03/21/13 15:30	1
Trichlorofluoromethane	ND		1.0		ug/L			03/21/13 15:30	1
Vinyl chloride	ND		0.50		ug/L			03/21/13 15:30	1
Dibromomethane	ND		1.0		ug/L			03/21/13 15:30	1

Surrogate	*%Recovery*	*Qualifier*	*Limits*	*Prepared*	*Analyzed*	*Dil Fac*
Toluene-d8 (Surr)	*96*		*70 - 130*		*03/21/13 15:30*	*1*
1,2-Dichloroethane-d4 (Surr)	*96*		*70 - 130*		*03/21/13 15:30*	*1*
4-Bromofluorobenzene (Surr)	*102*		*70 - 130*		*03/21/13 15:30*	*1*

Client Sample Results

Client: ERM-Northeast
Project/Site: IDS Wayland

TestAmerica Job ID: 480-34637-1

Client Sample ID: MW1032-20130319-01
Date Collected: 03/19/13 10:55
Date Received: 03/20/13 01:00

Lab Sample ID: 480-34637-8
Matrix: Water

Method: 8260C - Volatile Organic Compounds (GC/MS)

Analyte	Result	Qualifier	RL	MDL	Unit	D	Prepared	Analyzed	Dil Fac
1,1,1,2-Tetrachloroethane	ND		1.0		ug/L			03/21/13 15:53	1
1,1,1-Trichloroethane	ND		1.0		ug/L			03/21/13 15:53	1
1,1,2,2-Tetrachloroethane	ND		0.50		ug/L			03/21/13 15:53	1
1,1,2-Trichloroethane	ND		1.0		ug/L			03/21/13 15:53	1
1,1-Dichloroethane	**1.3**		1.0		ug/L			03/21/13 15:53	1
1,1-Dichloroethene	**1.7**		1.0		ug/L			03/21/13 15:53	1
1,1-Dichloropropene	ND		1.0		ug/L			03/21/13 15:53	1
1,2,3-Trichlorobenzene	ND		1.0		ug/L			03/21/13 15:53	1
1,2,3-Trichloropropane	ND		1.0		ug/L			03/21/13 15:53	1
1,2,4-Trichlorobenzene	ND		1.0		ug/L			03/21/13 15:53	1
1,2,4-Trimethylbenzene	ND		1.0		ug/L			03/21/13 15:53	1
1,2-Dibromo-3-Chloropropane	ND		5.0		ug/L			03/21/13 15:53	1
1,2-Dichlorobenzene	ND		1.0		ug/L			03/21/13 15:53	1
1,2-Dichloroethane	ND		1.0		ug/L			03/21/13 15:53	1
1,2-Dichloropropane	ND		1.0		ug/L			03/21/13 15:53	1
1,3,5-Trimethylbenzene	ND		1.0		ug/L			03/21/13 15:53	1
1,3-Dichlorobenzene	ND		1.0		ug/L			03/21/13 15:53	1
1,3-Dichloropropane	ND		1.0		ug/L			03/21/13 15:53	1
1,4-Dichlorobenzene	ND		1.0		ug/L			03/21/13 15:53	1
1,4-Dioxane	ND		50		ug/L			03/21/13 15:53	1
2,2-Dichloropropane	ND		1.0		ug/L			03/21/13 15:53	1
2-Butanone (MEK)	ND	*	10		ug/L			03/21/13 15:53	1
2-Chlorotoluene	ND		1.0		ug/L			03/21/13 15:53	1
2-Hexanone	ND		10		ug/L			03/21/13 15:53	1
4-Chlorotoluene	ND		1.0		ug/L			03/21/13 15:53	1
4-Isopropyltoluene	ND		1.0		ug/L			03/21/13 15:53	1
4-Methyl-2-pentanone (MIBK)	ND		10		ug/L			03/21/13 15:53	1
Acetone	ND		50		ug/L			03/21/13 15:53	1
Benzene	ND		1.0		ug/L			03/21/13 15:53	1
Bromobenzene	ND		1.0		ug/L			03/21/13 15:53	1
Bromoform	ND		1.0		ug/L			03/21/13 15:53	1
Bromomethane	ND		2.0		ug/L			03/21/13 15:53	1
Carbon disulfide	ND		10		ug/L			03/21/13 15:53	1
Carbon tetrachloride	ND		1.0		ug/L			03/21/13 15:53	1
Chlorobenzene	ND		1.0		ug/L			03/21/13 15:53	1
Chlorobromomethane	ND		1.0		ug/L			03/21/13 15:53	1
Chlorodibromomethane	ND		0.50		ug/L			03/21/13 15:53	1
Chloroethane	ND		2.0		ug/L			03/21/13 15:53	1
Chloroform	ND		1.0		ug/L			03/21/13 15:53	1
Chloromethane	ND		2.0		ug/L			03/21/13 15:53	1
cis-1,2-Dichloroethene	ND		1.0		ug/L			03/21/13 15:53	1
cis-1,3-Dichloropropene	ND		0.40		ug/L			03/21/13 15:53	1
Dichlorobromomethane	ND		0.50		ug/L			03/21/13 15:53	1
Dichlorodifluoromethane	ND		1.0		ug/L			03/21/13 15:53	1
Ethyl ether	ND		1.0		ug/L			03/21/13 15:53	1
Ethylbenzene	ND		1.0		ug/L			03/21/13 15:53	1
Ethylene Dibromide	ND		1.0		ug/L			03/21/13 15:53	1
Hexachlorobutadiene	ND		0.40		ug/L			03/21/13 15:53	1
Isopropyl ether	ND		10		ug/L			03/21/13 15:53	1

Client Sample ID: MW1032-20130319-01

Lab Sample ID: 480-34637-8

Date Collected: 03/19/13 10:55

Matrix: Water

Date Received: 03/20/13 01:00

Method: 8260C - Volatile Organic Compounds (GC/MS) (Continued)

Analyte	Result	Qualifier	RL	MDL	Unit	D	Prepared	Analyzed	Dil Fac
Isopropylbenzene	ND		1.0		ug/L			03/21/13 15:53	1
Methyl tert-butyl ether	**86**		1.0		ug/L			03/21/13 15:53	1
Methylene Chloride	ND		1.0		ug/L			03/21/13 15:53	1
m-Xylene & p-Xylene	ND		2.0		ug/L			03/21/13 15:53	1
Naphthalene	ND		5.0		ug/L			03/21/13 15:53	1
n-Butylbenzene	ND		1.0		ug/L			03/21/13 15:53	1
N-Propylbenzene	ND		1.0		ug/L			03/21/13 15:53	1
o-Xylene	ND		1.0		ug/L			03/21/13 15:53	1
sec-Butylbenzene	ND		1.0		ug/L			03/21/13 15:53	1
Styrene	ND		1.0		ug/L			03/21/13 15:53	1
Tert-amyl methyl ether	**18**		5.0		ug/L			03/21/13 15:53	1
Tert-butyl ethyl ether	ND		5.0		ug/L			03/21/13 15:53	1
tert-Butylbenzene	ND		1.0		ug/L			03/21/13 15:53	1
Tetrachloroethene	ND		1.0		ug/L			03/21/13 15:53	1
Tetrahydrofuran	ND		10		ug/L			03/21/13 15:53	1
Toluene	ND		1.0		ug/L			03/21/13 15:53	1
trans-1,2-Dichloroethene	ND		1.0		ug/L			03/21/13 15:53	1
trans-1,3-Dichloropropene	ND		0.40		ug/L			03/21/13 15:53	1
Trichloroethene	**12**		1.0		ug/L			03/21/13 15:53	1
Trichlorofluoromethane	ND		1.0		ug/L			03/21/13 15:53	1
Vinyl chloride	ND		0.50		ug/L			03/21/13 15:53	1
Dibromomethane	ND		1.0		ug/L			03/21/13 15:53	1

Surrogate	*%Recovery*	*Qualifier*	*Limits*	*Prepared*	*Analyzed*	*Dil Fac*
Toluene-d8 (Surr)	*96*		*70 - 130*		*03/21/13 15:53*	*1*
1,2-Dichloroethane-d4 (Surr)	*96*		*70 - 130*		*03/21/13 15:53*	*1*
4-Bromofluorobenzene (Surr)	*99*		*70 - 130*		*03/21/13 15:53*	*1*

Client Sample ID: MW-1005-20130319-01

Lab Sample ID: 480-34637-9

Date Collected: 03/19/13 15:50

Matrix: Water

Date Received: 03/20/13 01:00

Method: 8260C - Volatile Organic Compounds (GC/MS)

Analyte	Result	Qualifier	RL	MDL	Unit	D	Prepared	Analyzed	Dil Fac
1,1,1,2-Tetrachloroethane	ND		1.0		ug/L			03/21/13 16:17	1
1,1,1-Trichloroethane	ND		1.0		ug/L			03/21/13 16:17	1
1,1,2,2-Tetrachloroethane	ND		0.50		ug/L			03/21/13 16:17	1
1,1,2-Trichloroethane	ND		1.0		ug/L			03/21/13 16:17	1
1,1-Dichloroethane	ND		1.0		ug/L			03/21/13 16:17	1
1,1-Dichloroethene	ND		1.0		ug/L			03/21/13 16:17	1
1,1-Dichloropropene	ND		1.0		ug/L			03/21/13 16:17	1
1,2,3-Trichlorobenzene	ND		1.0		ug/L			03/21/13 16:17	1
1,2,3-Trichloropropane	ND		1.0		ug/L			03/21/13 16:17	1
1,2,4-Trichlorobenzene	ND		1.0		ug/L			03/21/13 16:17	1
1,2,4-Trimethylbenzene	ND		1.0		ug/L			03/21/13 16:17	1
1,2-Dibromo-3-Chloropropane	ND		5.0		ug/L			03/21/13 16:17	1
1,2-Dichlorobenzene	ND		1.0		ug/L			03/21/13 16:17	1
1,2-Dichloroethane	ND		1.0		ug/L			03/21/13 16:17	1
1,2-Dichloropropane	ND		1.0		ug/L			03/21/13 16:17	1
1,3,5-Trimethylbenzene	ND		1.0		ug/L			03/21/13 16:17	1

Client: ERM-Northeast
Project/Site: IDS Wayland

TestAmerica Job ID: 480-34637-1

Client Sample ID: MW-1005-20130319-01
Date Collected: 03/19/13 15:50
Date Received: 03/20/13 01:00

Lab Sample ID: 480-34637-9
Matrix: Water

Method: 8260C - Volatile Organic Compounds (GC/MS) (Continued)

Analyte	Result	Qualifier	RL	MDL	Unit	D	Prepared	Analyzed	Dil Fac
1,3-Dichlorobenzene	ND		1.0		ug/L			03/21/13 16:17	1
1,3-Dichloropropane	ND		1.0		ug/L			03/21/13 16:17	1
1,4-Dichlorobenzene	ND		1.0		ug/L			03/21/13 16:17	1
1,4-Dioxane	ND		50		ug/L			03/21/13 16:17	1
2,2-Dichloropropane	ND		1.0		ug/L			03/21/13 16:17	1
2-Butanone (MEK)	ND	*	10		ug/L			03/21/13 16:17	1
2-Chlorotoluene	ND		1.0		ug/L			03/21/13 16:17	1
2-Hexanone	ND		10		ug/L			03/21/13 16:17	1
4-Chlorotoluene	ND		1.0		ug/L			03/21/13 16:17	1
4-Isopropyltoluene	ND		1.0		ug/L			03/21/13 16:17	1
4-Methyl-2-pentanone (MIBK)	ND		10		ug/L			03/21/13 16:17	1
Acetone	ND		50		ug/L			03/21/13 16:17	1
Benzene	ND		1.0		ug/L			03/21/13 16:17	1
Bromobenzene	ND		1.0		ug/L			03/21/13 16:17	1
Bromoform	ND		1.0		ug/L			03/21/13 16:17	1
Bromomethane	ND		2.0		ug/L			03/21/13 16:17	1
Carbon disulfide	ND		10		ug/L			03/21/13 16:17	1
Carbon tetrachloride	ND		1.0		ug/L			03/21/13 16:17	1
Chlorobenzene	ND		1.0		ug/L			03/21/13 16:17	1
Chlorobromomethane	ND		1.0		ug/L			03/21/13 16:17	1
Chlorodibromomethane	ND		0.50		ug/L			03/21/13 16:17	1
Chloroethane	ND		2.0		ug/L			03/21/13 16:17	1
Chloroform	ND		1.0		ug/L			03/21/13 16:17	1
Chloromethane	ND		2.0		ug/L			03/21/13 16:17	1
cis-1,2-Dichloroethene	**3.2**		1.0		ug/L			03/21/13 16:17	1
cis-1,3-Dichloropropene	ND		0.40		ug/L			03/21/13 16:17	1
Dichlorobromomethane	ND		0.50		ug/L			03/21/13 16:17	1
Dichlorodifluoromethane	ND		1.0		ug/L			03/21/13 16:17	1
Ethyl ether	ND		1.0		ug/L			03/21/13 16:17	1
Ethylbenzene	ND		1.0		ug/L			03/21/13 16:17	1
Ethylene Dibromide	ND		1.0		ug/L			03/21/13 16:17	1
Hexachlorobutadiene	ND		0.40		ug/L			03/21/13 16:17	1
Isopropyl ether	ND		10		ug/L			03/21/13 16:17	1
Isopropylbenzene	ND		1.0		ug/L			03/21/13 16:17	1
Methyl tert-butyl ether	ND		1.0		ug/L			03/21/13 16:17	1
Methylene Chloride	ND		1.0		ug/L			03/21/13 16:17	1
m-Xylene & p-Xylene	ND		2.0		ug/L			03/21/13 16:17	1
Naphthalene	ND		5.0		ug/L			03/21/13 16:17	1
n-Butylbenzene	ND		1.0		ug/L			03/21/13 16:17	1
N-Propylbenzene	ND		1.0		ug/L			03/21/13 16:17	1
o-Xylene	ND		1.0		ug/L			03/21/13 16:17	1
sec-Butylbenzene	ND		1.0		ug/L			03/21/13 16:17	1
Styrene	ND		1.0		ug/L			03/21/13 16:17	1
Tert-amyl methyl ether	ND		5.0		ug/L			03/21/13 16:17	1
Tert-butyl ethyl ether	ND		5.0		ug/L			03/21/13 16:17	1
tert-Butylbenzene	ND		1.0		ug/L			03/21/13 16:17	1
Tetrachloroethene	**1.2**		1.0		ug/L			03/21/13 16:17	1
Tetrahydrofuran	ND		10		ug/L			03/21/13 16:17	1
Toluene	ND		1.0		ug/L			03/21/13 16:17	1

Client: ERM-Northeast
Project/Site: IDS Wayland

TestAmerica Job ID: 480-34637-1

Client Sample ID: MW-1005-20130319-01
Date Collected: 03/19/13 15:50
Date Received: 03/20/13 01:00

Lab Sample ID: 480-34637-9
Matrix: Water

Method: 8260C - Volatile Organic Compounds (GC/MS) (Continued)

Analyte	Result	Qualifier	RL	MDL	Unit	D	Prepared	Analyzed	Dil Fac
trans-1,2-Dichloroethene	ND		1.0		ug/L			03/21/13 16:17	1
trans-1,3-Dichloropropene	ND		0.40		ug/L			03/21/13 16:17	1
Trichloroethene	**17**		1.0		ug/L			03/21/13 16:17	1
Trichlorofluoromethane	ND		1.0		ug/L			03/21/13 16:17	1
Vinyl chloride	ND		0.50		ug/L			03/21/13 16:17	1
Dibromomethane	ND		1.0		ug/L			03/21/13 16:17	1

Surrogate	*%Recovery*	*Qualifier*	*Limits*	*Prepared*	*Analyzed*	*Dil Fac*
Toluene-d8 (Surr)	*97*		*70 - 130*		*03/21/13 16:17*	*1*
1,2-Dichloroethane-d4 (Surr)	*98*		*70 - 130*		*03/21/13 16:17*	*1*
4-Bromofluorobenzene (Surr)	*101*		*70 - 130*		*03/21/13 16:17*	*1*

Surrogate Summary

Client: ERM-Northeast
Project/Site: IDS Wayland

TestAmerica Job ID: 480-34637-1

Method: 8260C - Volatile Organic Compounds (GC/MS)

Matrix: Water **Prep Type: Total/NA**

		Percent Surrogate Recovery (Acceptance Limits)		
		TOL	12DCE	BFB
Lab Sample ID	Client Sample ID	(70-130)	(70-130)	(70-130)
480-34637-1	MW1020-20130319-01	97	96	99
480-34637-2	MW1017D-20130319-01	96	94	98
480-34637-3	MW1008-20130319-01	97	97	103
480-34637-4	MW1012-20130319-01	96	97	100
480-34637-5	MW1018-20130319-01	96	97	99
480-34637-5 - DL	MW1018-20130319-01	98	95	101
480-34637-6	MW1019B-20130319-01	97	100	101
480-34637-7	DUP-001-20130319-01	96	96	102
480-34637-8	MW1032-20130319-01	96	96	99
480-34637-9	MW-1005-20130319-01	97	98	101
LCS 480-108444/4	Lab Control Sample	99	97	104
LCS 480-108596/4	Lab Control Sample	97	94	102
LCSD 480-108444/5	Lab Control Sample Dup	99	97	103
LCSD 480-108596/5	Lab Control Sample Dup	98	94	102
MB 480-108444/7	Method Blank	96	96	100
MB 480-108596/7	Method Blank	97	95	101

Surrogate Legend

TOL = Toluene-d8 (Surr)
12DCE = 1,2-Dichloroethane-d4 (Surr)
BFB = 4-Bromofluorobenzene (Surr)

Method: 522 MOD - 1,4 Dioxane (GC/MS SIM)

Matrix: Water **Prep Type: Total/NA**

		Percent Surrogate Recovery (Acceptance Limits)
		14DD8
Lab Sample ID	Client Sample ID	(70-130)
480-34637-1	MW1020-20130319-01	78
LCS 200-53504/2-A	Lab Control Sample	84
MB 200-53504/1-A	Method Blank	79

Surrogate Legend

14DD8 = 1,4-Dioxane-d8 (Surr)

Method: 8260C - Volatile Organic Compounds (GC/MS)

Lab Sample ID: MB 480-108444/7
Matrix: Water
Analysis Batch: 108444

Client Sample ID: Method Blank
Prep Type: Total/NA

Analyte	MB Result	MB Qualifier	RL	MDL	Unit	D	Prepared	Analyzed	Dil Fac
1,1,1,2-Tetrachloroethane	ND		1.0		ug/L			03/21/13 10:59	1
1,1,1-Trichloroethane	ND		1.0		ug/L			03/21/13 10:59	1
1,1,2,2-Tetrachloroethane	ND		0.50		ug/L			03/21/13 10:59	1
1,1,2-Trichloroethane	ND		1.0		ug/L			03/21/13 10:59	1
1,1-Dichloroethane	ND		1.0		ug/L			03/21/13 10:59	1
1,1-Dichloroethene	ND		1.0		ug/L			03/21/13 10:59	1
1,1-Dichloropropene	ND		1.0		ug/L			03/21/13 10:59	1
1,2,3-Trichlorobenzene	ND		1.0		ug/L			03/21/13 10:59	1
1,2,3-Trichloropropane	ND		1.0		ug/L			03/21/13 10:59	1
1,2,4-Trichlorobenzene	ND		1.0		ug/L			03/21/13 10:59	1
1,2,4-Trimethylbenzene	ND		1.0		ug/L			03/21/13 10:59	1
1,2-Dibromo-3-Chloropropane	ND		5.0		ug/L			03/21/13 10:59	1
1,2-Dichlorobenzene	ND		1.0		ug/L			03/21/13 10:59	1
1,2-Dichloroethane	ND		1.0		ug/L			03/21/13 10:59	1
1,2-Dichloropropane	ND		1.0		ug/L			03/21/13 10:59	1
1,3,5-Trimethylbenzene	ND		1.0		ug/L			03/21/13 10:59	1
1,3-Dichlorobenzene	ND		1.0		ug/L			03/21/13 10:59	1
1,3-Dichloropropane	ND		1.0		ug/L			03/21/13 10:59	1
1,4-Dichlorobenzene	ND		1.0		ug/L			03/21/13 10:59	1
1,4-Dioxane	ND		50		ug/L			03/21/13 10:59	1
2,2-Dichloropropane	ND		1.0		ug/L			03/21/13 10:59	1
2-Butanone (MEK)	ND		10		ug/L			03/21/13 10:59	1
2-Chlorotoluene	ND		1.0		ug/L			03/21/13 10:59	1
2-Hexanone	ND		10		ug/L			03/21/13 10:59	1
4-Chlorotoluene	ND		1.0		ug/L			03/21/13 10:59	1
4-Isopropyltoluene	ND		1.0		ug/L			03/21/13 10:59	1
4-Methyl-2-pentanone (MIBK)	ND		10		ug/L			03/21/13 10:59	1
Acetone	ND		50		ug/L			03/21/13 10:59	1
Benzene	ND		1.0		ug/L			03/21/13 10:59	1
Bromobenzene	ND		1.0		ug/L			03/21/13 10:59	1
Bromoform	ND		1.0		ug/L			03/21/13 10:59	1
Bromomethane	ND		2.0		ug/L			03/21/13 10:59	1
Carbon disulfide	ND		10		ug/L			03/21/13 10:59	1
Carbon tetrachloride	ND		1.0		ug/L			03/21/13 10:59	1
Chlorobenzene	ND		1.0		ug/L			03/21/13 10:59	1
Chlorobromomethane	ND		1.0		ug/L			03/21/13 10:59	1
Chlorodibromomethane	ND		0.50		ug/L			03/21/13 10:59	1
Chloroethane	ND		2.0		ug/L			03/21/13 10:59	1
Chloroform	ND		1.0		ug/L			03/21/13 10:59	1
Chloromethane	ND		2.0		ug/L			03/21/13 10:59	1
cis-1,2-Dichloroethene	ND		1.0		ug/L			03/21/13 10:59	1
cis-1,3-Dichloropropene	ND		0.40		ug/L			03/21/13 10:59	1
Dichlorobromomethane	ND		0.50		ug/L			03/21/13 10:59	1
Dichlorodifluoromethane	ND		1.0		ug/L			03/21/13 10:59	1
Ethyl ether	ND		1.0		ug/L			03/21/13 10:59	1
Ethylbenzene	ND		1.0		ug/L			03/21/13 10:59	1
Ethylene Dibromide	ND		1.0		ug/L			03/21/13 10:59	1
Hexachlorobutadiene	ND		0.40		ug/L			03/21/13 10:59	1

Method: 8260C - Volatile Organic Compounds (GC/MS) (Continued)

Lab Sample ID: MB 480-108444/7
Matrix: Water
Analysis Batch: 108444

Client Sample ID: Method Blank
Prep Type: Total/NA

Analyte	MB Result	MB Qualifier	RL	MDL	Unit	D	Prepared	Analyzed	Dil Fac
Isopropyl ether	ND		10		ug/L			03/21/13 10:59	1
Isopropylbenzene	ND		1.0		ug/L			03/21/13 10:59	1
Methyl tert-butyl ether	ND		1.0		ug/L			03/21/13 10:59	1
Methylene Chloride	ND		1.0		ug/L			03/21/13 10:59	1
m-Xylene & p-Xylene	ND		2.0		ug/L			03/21/13 10:59	1
Naphthalene	ND		5.0		ug/L			03/21/13 10:59	1
n-Butylbenzene	ND		1.0		ug/L			03/21/13 10:59	1
N-Propylbenzene	ND		1.0		ug/L			03/21/13 10:59	1
o-Xylene	ND		1.0		ug/L			03/21/13 10:59	1
sec-Butylbenzene	ND		1.0		ug/L			03/21/13 10:59	1
Styrene	ND		1.0		ug/L			03/21/13 10:59	1
Tert-amyl methyl ether	ND		5.0		ug/L			03/21/13 10:59	1
Tert-butyl ethyl ether	ND		5.0		ug/L			03/21/13 10:59	1
tert-Butylbenzene	ND		1.0		ug/L			03/21/13 10:59	1
Tetrachloroethene	ND		1.0		ug/L			03/21/13 10:59	1
Tetrahydrofuran	ND		10		ug/L			03/21/13 10:59	1
Toluene	ND		1.0		ug/L			03/21/13 10:59	1
trans-1,2-Dichloroethene	ND		1.0		ug/L			03/21/13 10:59	1
trans-1,3-Dichloropropene	ND		0.40		ug/L			03/21/13 10:59	1
Trichloroethene	ND		1.0		ug/L			03/21/13 10:59	1
Trichlorofluoromethane	ND		1.0		ug/L			03/21/13 10:59	1
Vinyl chloride	ND		0.50		ug/L			03/21/13 10:59	1
Dibromomethane	ND		1.0		ug/L			03/21/13 10:59	1

Surrogate	*MB %Recovery*	*MB Qualifier*	*Limits*	*Prepared*	*Analyzed*	*Dil Fac*
Toluene-d8 (Surr)	*96*		*70 - 130*		*03/21/13 10:59*	*1*
1,2-Dichloroethane-d4 (Surr)	*96*		*70 - 130*		*03/21/13 10:59*	*1*
4-Bromofluorobenzene (Surr)	*100*		*70 - 130*		*03/21/13 10:59*	*1*

Lab Sample ID: LCS 480-108444/4
Matrix: Water
Analysis Batch: 108444

Client Sample ID: Lab Control Sample
Prep Type: Total/NA

Analyte	Spike Added	LCS Result	LCS Qualifier	Unit	D	%Rec	%Rec. Limits
1,1,1,2-Tetrachloroethane	25.0	24.1		ug/L		97	70 - 130
1,1,1-Trichloroethane	25.0	23.1		ug/L		93	70 - 130
1,1,2,2-Tetrachloroethane	25.0	23.2		ug/L		93	70 - 130
1,1,2-Trichloroethane	25.0	23.3		ug/L		93	70 - 130
1,1-Dichloroethane	25.0	23.2		ug/L		93	70 - 130
1,1-Dichloroethene	25.0	23.6		ug/L		94	70 - 130
1,1-Dichloropropene	25.0	23.8		ug/L		95	70 - 130
1,2,3-Trichlorobenzene	25.0	24.2		ug/L		97	70 - 130
1,2,3-Trichloropropane	25.0	23.8		ug/L		95	70 - 130
1,2,4-Trichlorobenzene	25.0	24.9		ug/L		100	70 - 130
1,2,4-Trimethylbenzene	25.0	22.6		ug/L		91	70 - 130
1,2-Dibromo-3-Chloropropane	25.0	24.2		ug/L		97	70 - 130
1,2-Dichlorobenzene	25.0	23.1		ug/L		92	70 - 130
1,2-Dichloroethane	25.0	22.6		ug/L		91	70 - 130

Method: 8260C - Volatile Organic Compounds (GC/MS) (Continued)

Lab Sample ID: LCS 480-108444/4
Matrix: Water
Analysis Batch: 108444

Client Sample ID: Lab Control Sample
Prep Type: Total/NA

Analyte	Spike Added	LCS Result	LCS Qualifier	Unit	D	%Rec	%Rec. Limits
1,2-Dichloropropane	25.0	23.5		ug/L		94	70 - 130
1,3,5-Trimethylbenzene	25.0	22.6		ug/L		90	70 - 130
1,3-Dichlorobenzene	25.0	23.0		ug/L		92	70 - 130
1,3-Dichloropropane	25.0	22.8		ug/L		91	70 - 130
1,4-Dichlorobenzene	25.0	23.2		ug/L		93	70 - 130
1,4-Dioxane	1000	1050		ug/L		105	70 - 130
2,2-Dichloropropane	25.0	22.4		ug/L		90	70 - 130
2-Butanone (MEK)	125	174	*	ug/L		139	70 - 130
2-Chlorotoluene	25.0	22.3		ug/L		89	70 - 130
2-Hexanone	125	119		ug/L		95	70 - 130
4-Chlorotoluene	25.0	20.0		ug/L		80	70 - 130
4-Isopropyltoluene	25.0	23.4		ug/L		94	70 - 130
4-Methyl-2-pentanone (MIBK)	125	119		ug/L		95	70 - 130
Acetone	125	136		ug/L		109	70 - 130
Benzene	25.0	23.1		ug/L		92	70 - 130
Bromobenzene	25.0	23.1		ug/L		92	70 - 130
Bromoform	25.0	24.9		ug/L		100	70 - 130
Bromomethane	25.0	19.1		ug/L		76	70 - 130
Carbon disulfide	25.0	23.3		ug/L		93	70 - 130
Carbon tetrachloride	25.0	23.7		ug/L		95	70 - 130
Chlorobenzene	25.0	23.3		ug/L		93	70 - 130
Chlorobromomethane	25.0	25.1		ug/L		100	70 - 130
Chlorodibromomethane	25.0	24.2		ug/L		97	70 - 130
Chloroethane	25.0	23.5		ug/L		94	70 - 130
Chloroform	25.0	23.0		ug/L		92	70 - 130
Chloromethane	25.0	22.3		ug/L		89	70 - 130
cis-1,2-Dichloroethene	25.0	24.3		ug/L		97	70 - 130
cis-1,3-Dichloropropene	25.0	24.2		ug/L		97	70 - 130
Dichlorobromomethane	25.0	23.2		ug/L		93	70 - 130
Dichlorodifluoromethane	50.0	56.5		ug/L		113	70 - 130
Ethyl ether	25.0	24.8		ug/L		99	70 - 130
Ethylbenzene	25.0	22.8		ug/L		91	70 - 130
Ethylene Dibromide	25.0	23.7		ug/L		95	70 - 130
Hexachlorobutadiene	25.0	23.1		ug/L		93	70 - 130
Isopropyl ether	25.0	24.8		ug/L		99	70 - 130
Isopropylbenzene	25.0	22.4		ug/L		89	70 - 130
Methyl tert-butyl ether	25.0	24.4		ug/L		98	70 - 130
Methylene Chloride	25.0	22.3		ug/L		89	70 - 130
m-Xylene & p-Xylene	50.0	46.2		ug/L		92	70 - 130
Naphthalene	25.0	24.2		ug/L		97	70 - 130
n-Butylbenzene	25.0	22.8		ug/L		91	70 - 130
N-Propylbenzene	25.0	22.7		ug/L		91	70 - 130
o-Xylene	25.0	23.1		ug/L		93	70 - 130
sec-Butylbenzene	25.0	22.8		ug/L		91	70 - 130
Styrene	25.0	23.5		ug/L		94	70 - 130
Tert-amyl methyl ether	25.0	24.9		ug/L		99	70 - 130
Tert-butyl ethyl ether	25.0	24.4		ug/L		98	70 - 130
tert-Butylbenzene	25.0	23.6		ug/L		95	70 - 130

Method: 8260C - Volatile Organic Compounds (GC/MS) (Continued)

Lab Sample ID: LCS 480-108444/4
Matrix: Water
Analysis Batch: 108444

Client Sample ID: Lab Control Sample
Prep Type: Total/NA

Analyte	Spike Added	LCS Result	LCS Qualifier	Unit	D	%Rec	%Rec. Limits
Tetrachloroethene	25.0	24.7		ug/L		99	70 - 130
Tetrahydrofuran	125	128		ug/L		103	70 - 130
Toluene	25.0	22.8		ug/L		91	70 - 130
trans-1,2-Dichloroethene	25.0	23.4		ug/L		93	70 - 130
trans-1,3-Dichloropropene	25.0	23.4		ug/L		94	70 - 130
Trichloroethene	25.0	23.5		ug/L		94	70 - 130
Trichlorofluoromethane	25.0	25.6		ug/L		103	70 - 130
Vinyl chloride	25.0	21.9		ug/L		88	70 - 130
Dibromomethane	25.0	24.4		ug/L		97	70 - 130

Surrogate	*LCS %Recovery*	*LCS Qualifier*	*Limits*
Toluene-d8 (Surr)	*99*		*70 - 130*
1,2-Dichloroethane-d4 (Surr)	*97*		*70 - 130*
4-Bromofluorobenzene (Surr)	*104*		*70 - 130*

Lab Sample ID: LCSD 480-108444/5
Matrix: Water
Analysis Batch: 108444

Client Sample ID: Lab Control Sample Dup
Prep Type: Total/NA

Analyte	Spike Added	LCSD Result	LCSD Qualifier	Unit	D	%Rec	%Rec. Limits	RPD	RPD Limit
1,1,1,2-Tetrachloroethane	25.0	23.2		ug/L		93	70 - 130	4	20
1,1,1-Trichloroethane	25.0	22.0		ug/L		88	70 - 130	5	20
1,1,2,2-Tetrachloroethane	25.0	23.5		ug/L		94	70 - 130	1	20
1,1,2-Trichloroethane	25.0	23.5		ug/L		94	70 - 130	1	20
1,1-Dichloroethane	25.0	22.5		ug/L		90	70 - 130	3	20
1,1-Dichloroethene	25.0	21.9		ug/L		88	70 - 130	7	20
1,1-Dichloropropene	25.0	22.7		ug/L		91	70 - 130	4	20
1,2,3-Trichlorobenzene	25.0	23.2		ug/L		93	70 - 130	4	20
1,2,3-Trichloropropane	25.0	24.0		ug/L		96	70 - 130	1	20
1,2,4-Trichlorobenzene	25.0	24.3		ug/L		97	70 - 130	2	20
1,2,4-Trimethylbenzene	25.0	22.5		ug/L		90	70 - 130	1	20
1,2-Dibromo-3-Chloropropane	25.0	24.5		ug/L		98	70 - 130	1	20
1,2-Dichlorobenzene	25.0	23.1		ug/L		92	70 - 130	0	20
1,2-Dichloroethane	25.0	22.3		ug/L		89	70 - 130	2	20
1,2-Dichloropropane	25.0	22.7		ug/L		91	70 - 130	4	20
1,3,5-Trimethylbenzene	25.0	22.0		ug/L		88	70 - 130	3	20
1,3-Dichlorobenzene	25.0	23.3		ug/L		93	70 - 130	1	20
1,3-Dichloropropane	25.0	22.2		ug/L		89	70 - 130	2	20
1,4-Dichlorobenzene	25.0	23.0		ug/L		92	70 - 130	1	20
1,4-Dioxane	1000	973		ug/L		97	70 - 130	8	20
2,2-Dichloropropane	25.0	21.5		ug/L		86	70 - 130	4	20
2-Butanone (MEK)	125	169	*	ug/L		136	70 - 130	3	20
2-Chlorotoluene	25.0	22.5		ug/L		90	70 - 130	1	20
2-Hexanone	125	118		ug/L		94	70 - 130	1	20
4-Chlorotoluene	25.0	19.9		ug/L		80	70 - 130	0	20
4-Isopropyltoluene	25.0	22.8		ug/L		91	70 - 130	3	20
4-Methyl-2-pentanone (MIBK)	125	118		ug/L		95	70 - 130	1	20
Acetone	125	120		ug/L		96	70 - 130	13	20

Method: 8260C - Volatile Organic Compounds (GC/MS) (Continued)

Lab Sample ID: LCSD 480-108444/5
Matrix: Water
Analysis Batch: 108444

Client Sample ID: Lab Control Sample Dup
Prep Type: Total/NA

Analyte	Spike Added	LCSD Result	LCSD Qualifier	Unit	D	%Rec	%Rec. Limits	RPD	RPD Limit
Benzene	25.0	22.4		ug/L		89	70 - 130	3	20
Bromobenzene	25.0	23.4		ug/L		93	70 - 130	1	20
Bromoform	25.0	24.4		ug/L		98	70 - 130	2	20
Bromomethane	25.0	22.4		ug/L		90	70 - 130	16	20
Carbon disulfide	25.0	22.2		ug/L		89	70 - 130	5	20
Carbon tetrachloride	25.0	22.5		ug/L		90	70 - 130	5	20
Chlorobenzene	25.0	22.8		ug/L		91	70 - 130	3	20
Chlorobromomethane	25.0	24.7		ug/L		99	70 - 130	2	20
Chlorodibromomethane	25.0	23.8		ug/L		95	70 - 130	2	20
Chloroethane	25.0	22.7		ug/L		91	70 - 130	3	20
Chloroform	25.0	21.9		ug/L		88	70 - 130	5	20
Chloromethane	25.0	21.6		ug/L		86	70 - 130	3	20
cis-1,2-Dichloroethene	25.0	22.9		ug/L		91	70 - 130	6	20
cis-1,3-Dichloropropene	25.0	23.4		ug/L		94	70 - 130	4	20
Dichlorobromomethane	25.0	22.6		ug/L		90	70 - 130	2	20
Dichlorodifluoromethane	50.0	53.7		ug/L		107	70 - 130	5	20
Ethyl ether	25.0	24.3		ug/L		97	70 - 130	2	20
Ethylbenzene	25.0	22.1		ug/L		88	70 - 130	3	20
Ethylene Dibromide	25.0	23.5		ug/L		94	70 - 130	1	20
Hexachlorobutadiene	25.0	22.1		ug/L		88	70 - 130	5	20
Isopropyl ether	25.0	24.2		ug/L		97	70 - 130	3	20
Isopropylbenzene	25.0	22.1		ug/L		88	70 - 130	1	20
Methyl tert-butyl ether	25.0	24.1		ug/L		97	70 - 130	1	20
Methylene Chloride	25.0	21.2		ug/L		85	70 - 130	5	20
m-Xylene & p-Xylene	50.0	44.5		ug/L		89	70 - 130	4	20
Naphthalene	25.0	23.5		ug/L		94	70 - 130	3	20
n-Butylbenzene	25.0	22.4		ug/L		90	70 - 130	2	20
N-Propylbenzene	25.0	22.3		ug/L		89	70 - 130	2	20
o-Xylene	25.0	22.8		ug/L		91	70 - 130	1	20
sec-Butylbenzene	25.0	22.6		ug/L		90	70 - 130	1	20
Styrene	25.0	22.7		ug/L		91	70 - 130	3	20
Tert-amyl methyl ether	25.0	24.5		ug/L		98	70 - 130	2	20
Tert-butyl ethyl ether	25.0	23.8		ug/L		95	70 - 130	3	20
tert-Butylbenzene	25.0	22.7		ug/L		91	70 - 130	4	20
Tetrachloroethene	25.0	23.8		ug/L		95	70 - 130	4	20
Tetrahydrofuran	125	122		ug/L		98	70 - 130	5	20
Toluene	25.0	22.2		ug/L		89	70 - 130	3	20
trans-1,2-Dichloroethene	25.0	22.9		ug/L		92	70 - 130	2	20
trans-1,3-Dichloropropene	25.0	22.9		ug/L		92	70 - 130	2	20
Trichloroethene	25.0	22.8		ug/L		91	70 - 130	3	20
Trichlorofluoromethane	25.0	23.7		ug/L		95	70 - 130	8	20
Vinyl chloride	25.0	21.0		ug/L		84	70 - 130	5	20
Dibromomethane	25.0	23.6		ug/L		95	70 - 130	3	20

Surrogate	*LCSD %Recovery*	*LCSD Qualifier*	*Limits*
Toluene-d8 (Surr)	*99*		*70 - 130*
1,2-Dichloroethane-d4 (Surr)	*97*		*70 - 130*
4-Bromofluorobenzene (Surr)	*103*		*70 - 130*

Method: 8260C - Volatile Organic Compounds (GC/MS) (Continued)

Lab Sample ID: MB 480-108596/7
Matrix: Water
Analysis Batch: 108596

Client Sample ID: Method Blank
Prep Type: Total/NA

Analyte	MB Result	MB Qualifier	RL	MDL	Unit	D	Prepared	Analyzed	Dil Fac
1,1,1,2-Tetrachloroethane	ND		1.0		ug/L			03/22/13 00:17	1
1,1,1-Trichloroethane	ND		1.0		ug/L			03/22/13 00:17	1
1,1,2,2-Tetrachloroethane	ND		0.50		ug/L			03/22/13 00:17	1
1,1,2-Trichloroethane	ND		1.0		ug/L			03/22/13 00:17	1
1,1-Dichloroethane	ND		1.0		ug/L			03/22/13 00:17	1
1,1-Dichloroethene	ND		1.0		ug/L			03/22/13 00:17	1
1,1-Dichloropropene	ND		1.0		ug/L			03/22/13 00:17	1
1,2,3-Trichlorobenzene	ND		1.0		ug/L			03/22/13 00:17	1
1,2,3-Trichloropropane	ND		1.0		ug/L			03/22/13 00:17	1
1,2,4-Trichlorobenzene	ND		1.0		ug/L			03/22/13 00:17	1
1,2,4-Trimethylbenzene	ND		1.0		ug/L			03/22/13 00:17	1
1,2-Dibromo-3-Chloropropane	ND		5.0		ug/L			03/22/13 00:17	1
1,2-Dichlorobenzene	ND		1.0		ug/L			03/22/13 00:17	1
1,2-Dichloroethane	ND		1.0		ug/L			03/22/13 00:17	1
1,2-Dichloropropane	ND		1.0		ug/L			03/22/13 00:17	1
1,3,5-Trimethylbenzene	ND		1.0		ug/L			03/22/13 00:17	1
1,3-Dichlorobenzene	ND		1.0		ug/L			03/22/13 00:17	1
1,3-Dichloropropane	ND		1.0		ug/L			03/22/13 00:17	1
1,4-Dichlorobenzene	ND		1.0		ug/L			03/22/13 00:17	1
1,4-Dioxane	ND		50		ug/L			03/22/13 00:17	1
2,2-Dichloropropane	ND		1.0		ug/L			03/22/13 00:17	1
2-Butanone (MEK)	ND		10		ug/L			03/22/13 00:17	1
2-Chlorotoluene	ND		1.0		ug/L			03/22/13 00:17	1
2-Hexanone	ND		10		ug/L			03/22/13 00:17	1
4-Chlorotoluene	ND		1.0		ug/L			03/22/13 00:17	1
4-Isopropyltoluene	ND		1.0		ug/L			03/22/13 00:17	1
4-Methyl-2-pentanone (MIBK)	ND		10		ug/L			03/22/13 00:17	1
Acetone	ND		50		ug/L			03/22/13 00:17	1
Benzene	ND		1.0		ug/L			03/22/13 00:17	1
Bromobenzene	ND		1.0		ug/L			03/22/13 00:17	1
Bromoform	ND		1.0		ug/L			03/22/13 00:17	1
Bromomethane	ND		2.0		ug/L			03/22/13 00:17	1
Carbon disulfide	ND		10		ug/L			03/22/13 00:17	1
Carbon tetrachloride	ND		1.0		ug/L			03/22/13 00:17	1
Chlorobenzene	ND		1.0		ug/L			03/22/13 00:17	1
Chlorobromomethane	ND		1.0		ug/L			03/22/13 00:17	1
Chlorodibromomethane	ND		0.50		ug/L			03/22/13 00:17	1
Chloroethane	ND		2.0		ug/L			03/22/13 00:17	1
Chloroform	ND		1.0		ug/L			03/22/13 00:17	1
Chloromethane	ND		2.0		ug/L			03/22/13 00:17	1
cis-1,2-Dichloroethene	ND		1.0		ug/L			03/22/13 00:17	1
cis-1,3-Dichloropropene	ND		0.40		ug/L			03/22/13 00:17	1
Dichlorobromomethane	ND		0.50		ug/L			03/22/13 00:17	1
Dichlorodifluoromethane	ND		1.0		ug/L			03/22/13 00:17	1
Ethyl ether	ND		1.0		ug/L			03/22/13 00:17	1
Ethylbenzene	ND		1.0		ug/L			03/22/13 00:17	1
Ethylene Dibromide	ND		1.0		ug/L			03/22/13 00:17	1
Hexachlorobutadiene	ND		0.40		ug/L			03/22/13 00:17	1

Method: 8260C - Volatile Organic Compounds (GC/MS) (Continued)

Lab Sample ID: MB 480-108596/7
Matrix: Water
Analysis Batch: 108596

Client Sample ID: Method Blank
Prep Type: Total/NA

Analyte	MB Result	MB Qualifier	RL	MDL	Unit	D	Prepared	Analyzed	Dil Fac
Isopropyl ether	ND		10		ug/L			03/22/13 00:17	1
Isopropylbenzene	ND		1.0		ug/L			03/22/13 00:17	1
Methyl tert-butyl ether	ND		1.0		ug/L			03/22/13 00:17	1
Methylene Chloride	ND		1.0		ug/L			03/22/13 00:17	1
m-Xylene & p-Xylene	ND		2.0		ug/L			03/22/13 00:17	1
Naphthalene	ND		5.0		ug/L			03/22/13 00:17	1
n-Butylbenzene	ND		1.0		ug/L			03/22/13 00:17	1
N-Propylbenzene	ND		1.0		ug/L			03/22/13 00:17	1
o-Xylene	ND		1.0		ug/L			03/22/13 00:17	1
sec-Butylbenzene	ND		1.0		ug/L			03/22/13 00:17	1
Styrene	ND		1.0		ug/L			03/22/13 00:17	1
Tert-amyl methyl ether	ND		5.0		ug/L			03/22/13 00:17	1
Tert-butyl ethyl ether	ND		5.0		ug/L			03/22/13 00:17	1
tert-Butylbenzene	ND		1.0		ug/L			03/22/13 00:17	1
Tetrachloroethene	ND		1.0		ug/L			03/22/13 00:17	1
Tetrahydrofuran	ND		10		ug/L			03/22/13 00:17	1
Toluene	ND		1.0		ug/L			03/22/13 00:17	1
trans-1,2-Dichloroethene	ND		1.0		ug/L			03/22/13 00:17	1
trans-1,3-Dichloropropene	ND		0.40		ug/L			03/22/13 00:17	1
Trichloroethene	ND		1.0		ug/L			03/22/13 00:17	1
Trichlorofluoromethane	ND		1.0		ug/L			03/22/13 00:17	1
Vinyl chloride	ND		0.50		ug/L			03/22/13 00:17	1
Dibromomethane	ND		1.0		ug/L			03/22/13 00:17	1

Surrogate	*MB %Recovery*	*MB Qualifier*	*Limits*	*Prepared*	*Analyzed*	*Dil Fac*
Toluene-d8 (Surr)	*97*		*70 - 130*		*03/22/13 00:17*	*1*
1,2-Dichloroethane-d4 (Surr)	*95*		*70 - 130*		*03/22/13 00:17*	*1*
4-Bromofluorobenzene (Surr)	*101*		*70 - 130*		*03/22/13 00:17*	*1*

Lab Sample ID: LCS 480-108596/4
Matrix: Water
Analysis Batch: 108596

Client Sample ID: Lab Control Sample
Prep Type: Total/NA

Analyte	Spike Added	LCS Result	LCS Qualifier	Unit	D	%Rec	%Rec. Limits
1,1,1,2-Tetrachloroethane	25.0	23.4		ug/L		94	70 - 130
1,1,1-Trichloroethane	25.0	22.3		ug/L		89	70 - 130
1,1,2,2-Tetrachloroethane	25.0	24.0		ug/L		96	70 - 130
1,1,2-Trichloroethane	25.0	23.3		ug/L		93	70 - 130
1,1-Dichloroethane	25.0	23.5		ug/L		94	70 - 130
1,1-Dichloroethene	25.0	23.2		ug/L		93	70 - 130
1,1-Dichloropropene	25.0	23.7		ug/L		95	70 - 130
1,2,3-Trichlorobenzene	25.0	24.4		ug/L		98	70 - 130
1,2,3-Trichloropropane	25.0	24.1		ug/L		96	70 - 130
1,2,4-Trichlorobenzene	25.0	25.4		ug/L		102	70 - 130
1,2,4-Trimethylbenzene	25.0	23.4		ug/L		94	70 - 130
1,2-Dibromo-3-Chloropropane	25.0	25.0		ug/L		100	70 - 130
1,2-Dichlorobenzene	25.0	23.9		ug/L		96	70 - 130
1,2-Dichloroethane	25.0	22.9		ug/L		92	70 - 130

Method: 8260C - Volatile Organic Compounds (GC/MS) (Continued)

Lab Sample ID: LCS 480-108596/4
Matrix: Water
Analysis Batch: 108596

Client Sample ID: Lab Control Sample
Prep Type: Total/NA

Analyte	Spike Added	LCS Result	LCS Qualifier	Unit	D	%Rec	%Rec. Limits
1,2-Dichloropropane	25.0	23.5		ug/L		94	70 - 130
1,3,5-Trimethylbenzene	25.0	23.2		ug/L		93	70 - 130
1,3-Dichlorobenzene	25.0	23.7		ug/L		95	70 - 130
1,3-Dichloropropane	25.0	23.4		ug/L		94	70 - 130
1,4-Dichlorobenzene	25.0	23.8		ug/L		95	70 - 130
1,4-Dioxane	1000	1010		ug/L		101	70 - 130
2,2-Dichloropropane	25.0	20.8		ug/L		83	70 - 130
2-Butanone (MEK)	125	173	*	ug/L		138	70 - 130
2-Chlorotoluene	25.0	23.2		ug/L		93	70 - 130
2-Hexanone	125	115		ug/L		92	70 - 130
4-Chlorotoluene	25.0	20.7		ug/L		83	70 - 130
4-Isopropyltoluene	25.0	23.9		ug/L		96	70 - 130
4-Methyl-2-pentanone (MIBK)	125	117		ug/L		93	70 - 130
Acetone	125	117		ug/L		93	70 - 130
Benzene	25.0	23.5		ug/L		94	70 - 130
Bromobenzene	25.0	23.6		ug/L		95	70 - 130
Bromoform	25.0	24.2		ug/L		97	70 - 130
Bromomethane	25.0	21.5		ug/L		86	70 - 130
Carbon disulfide	25.0	21.3		ug/L		85	70 - 130
Carbon tetrachloride	25.0	22.4		ug/L		90	70 - 130
Chlorobenzene	25.0	23.7		ug/L		95	70 - 130
Chlorobromomethane	25.0	25.4		ug/L		102	70 - 130
Chlorodibromomethane	25.0	24.3		ug/L		97	70 - 130
Chloroethane	25.0	22.3		ug/L		89	70 - 130
Chloroform	25.0	23.3		ug/L		93	70 - 130
Chloromethane	25.0	23.3		ug/L		93	70 - 130
cis-1,2-Dichloroethene	25.0	24.5		ug/L		98	70 - 130
cis-1,3-Dichloropropene	25.0	24.4		ug/L		97	70 - 130
Dichlorobromomethane	25.0	23.6		ug/L		94	70 - 130
Dichlorodifluoromethane	50.0	53.0		ug/L		106	70 - 130
Ethyl ether	25.0	24.5		ug/L		98	70 - 130
Ethylbenzene	25.0	23.1		ug/L		92	70 - 130
Ethylene Dibromide	25.0	24.2		ug/L		97	70 - 130
Hexachlorobutadiene	25.0	23.3		ug/L		93	70 - 130
Isopropyl ether	25.0	25.2		ug/L		101	70 - 130
Isopropylbenzene	25.0	23.1		ug/L		92	70 - 130
Methyl tert-butyl ether	25.0	23.4		ug/L		94	70 - 130
Methylene Chloride	25.0	22.8		ug/L		91	70 - 130
m-Xylene & p-Xylene	50.0	47.8		ug/L		96	70 - 130
Naphthalene	25.0	24.7		ug/L		99	70 - 130
n-Butylbenzene	25.0	23.2		ug/L		93	70 - 130
N-Propylbenzene	25.0	22.8		ug/L		91	70 - 130
o-Xylene	25.0	23.8		ug/L		95	70 - 130
sec-Butylbenzene	25.0	23.3		ug/L		93	70 - 130
Styrene	25.0	23.7		ug/L		95	70 - 130
Tert-amyl methyl ether	25.0	24.7		ug/L		99	70 - 130
Tert-butyl ethyl ether	25.0	24.5		ug/L		98	70 - 130
tert-Butylbenzene	25.0	24.0		ug/L		96	70 - 130

Method: 8260C - Volatile Organic Compounds (GC/MS) (Continued)

Lab Sample ID: LCS 480-108596/4
Matrix: Water
Analysis Batch: 108596

Client Sample ID: Lab Control Sample
Prep Type: Total/NA

Analyte	Spike Added	LCS Result	LCS Qualifier	Unit	D	%Rec	%Rec. Limits
Tetrachloroethene	25.0	25.2		ug/L		101	70 - 130
Tetrahydrofuran	125	119		ug/L		95	70 - 130
Toluene	25.0	23.6		ug/L		94	70 - 130
trans-1,2-Dichloroethene	25.0	23.9		ug/L		96	70 - 130
trans-1,3-Dichloropropene	25.0	23.1		ug/L		93	70 - 130
Trichloroethene	25.0	24.1		ug/L		97	70 - 130
Trichlorofluoromethane	25.0	24.5		ug/L		98	70 - 130
Vinyl chloride	25.0	22.4		ug/L		89	70 - 130
Dibromomethane	25.0	24.3		ug/L		97	70 - 130

Surrogate	*LCS %Recovery*	*LCS Qualifier*	*Limits*
Toluene-d8 (Surr)	*97*		*70 - 130*
1,2-Dichloroethane-d4 (Surr)	*94*		*70 - 130*
4-Bromofluorobenzene (Surr)	*102*		*70 - 130*

Lab Sample ID: LCSD 480-108596/5
Matrix: Water
Analysis Batch: 108596

Client Sample ID: Lab Control Sample Dup
Prep Type: Total/NA

Analyte	Spike Added	LCSD Result	LCSD Qualifier	Unit	D	%Rec	%Rec. Limits	RPD	RPD Limit
1,1,1,2-Tetrachloroethane	25.0	24.6		ug/L		98	70 - 130	5	20
1,1,1-Trichloroethane	25.0	22.5		ug/L		90	70 - 130	1	20
1,1,2,2-Tetrachloroethane	25.0	23.6		ug/L		94	70 - 130	1	20
1,1,2-Trichloroethane	25.0	23.9		ug/L		96	70 - 130	2	20
1,1-Dichloroethane	25.0	22.7		ug/L		91	70 - 130	3	20
1,1-Dichloroethene	25.0	21.9		ug/L		88	70 - 130	6	20
1,1-Dichloropropene	25.0	23.5		ug/L		94	70 - 130	1	20
1,2,3-Trichlorobenzene	25.0	24.6		ug/L		98	70 - 130	1	20
1,2,3-Trichloropropane	25.0	23.9		ug/L		96	70 - 130	1	20
1,2,4-Trichlorobenzene	25.0	25.5		ug/L		102	70 - 130	1	20
1,2,4-Trimethylbenzene	25.0	23.2		ug/L		93	70 - 130	1	20
1,2-Dibromo-3-Chloropropane	25.0	22.9		ug/L		92	70 - 130	9	20
1,2-Dichlorobenzene	25.0	23.6		ug/L		95	70 - 130	1	20
1,2-Dichloroethane	25.0	22.6		ug/L		90	70 - 130	2	20
1,2-Dichloropropane	25.0	23.6		ug/L		95	70 - 130	1	20
1,3,5-Trimethylbenzene	25.0	22.6		ug/L		90	70 - 130	2	20
1,3-Dichlorobenzene	25.0	23.8		ug/L		95	70 - 130	0	20
1,3-Dichloropropane	25.0	23.0		ug/L		92	70 - 130	2	20
1,4-Dichlorobenzene	25.0	23.9		ug/L		96	70 - 130	0	20
1,4-Dioxane	1000	912		ug/L		91	70 - 130	11	20
2,2-Dichloropropane	25.0	21.9		ug/L		87	70 - 130	5	20
2-Butanone (MEK)	125	161		ug/L		128	70 - 130	7	20
2-Chlorotoluene	25.0	22.6		ug/L		90	70 - 130	3	20
2-Hexanone	125	109		ug/L		87	70 - 130	6	20
4-Chlorotoluene	25.0	20.2		ug/L		81	70 - 130	2	20
4-Isopropyltoluene	25.0	23.4		ug/L		93	70 - 130	2	20
4-Methyl-2-pentanone (MIBK)	125	111		ug/L		89	70 - 130	5	20
Acetone	125	109		ug/L		87	70 - 130	7	20

Method: 8260C - Volatile Organic Compounds (GC/MS) (Continued)

Lab Sample ID: LCSD 480-108596/5
Matrix: Water
Analysis Batch: 108596

Client Sample ID: Lab Control Sample Dup
Prep Type: Total/NA

Analyte	Spike Added	LCSD Result	LCSD Qualifier	Unit	D	%Rec	%Rec. Limits	RPD	RPD Limit
Benzene	25.0	23.2		ug/L		93	70 - 130	1	20
Bromobenzene	25.0	23.7		ug/L		95	70 - 130	0	20
Bromoform	25.0	24.2		ug/L		97	70 - 130	0	20
Bromomethane	25.0	26.3		ug/L		105	70 - 130	20	20
Carbon disulfide	25.0	21.1		ug/L		84	70 - 130	1	20
Carbon tetrachloride	25.0	22.2		ug/L		89	70 - 130	1	20
Chlorobenzene	25.0	23.4		ug/L		94	70 - 130	1	20
Chlorobromomethane	25.0	25.2		ug/L		101	70 - 130	1	20
Chlorodibromomethane	25.0	24.2		ug/L		97	70 - 130	0	20
Chloroethane	25.0	23.3		ug/L		93	70 - 130	4	20
Chloroform	25.0	22.9		ug/L		92	70 - 130	2	20
Chloromethane	25.0	23.0		ug/L		92	70 - 130	1	20
cis-1,2-Dichloroethene	25.0	23.8		ug/L		95	70 - 130	3	20
cis-1,3-Dichloropropene	25.0	24.4		ug/L		98	70 - 130	0	20
Dichlorobromomethane	25.0	23.4		ug/L		94	70 - 130	1	20
Dichlorodifluoromethane	50.0	51.8		ug/L		104	70 - 130	2	20
Ethyl ether	25.0	25.0		ug/L		100	70 - 130	2	20
Ethylbenzene	25.0	22.8		ug/L		91	70 - 130	1	20
Ethylene Dibromide	25.0	23.7		ug/L		95	70 - 130	2	20
Hexachlorobutadiene	25.0	23.5		ug/L		94	70 - 130	1	20
Isopropyl ether	25.0	24.8		ug/L		99	70 - 130	2	20
Isopropylbenzene	25.0	22.8		ug/L		91	70 - 130	1	20
Methyl tert-butyl ether	25.0	23.3		ug/L		93	70 - 130	0	20
Methylene Chloride	25.0	22.6		ug/L		90	70 - 130	1	20
m-Xylene & p-Xylene	50.0	46.2		ug/L		92	70 - 130	3	20
Naphthalene	25.0	24.0		ug/L		96	70 - 130	3	20
n-Butylbenzene	25.0	22.5		ug/L		90	70 - 130	3	20
N-Propylbenzene	25.0	22.6		ug/L		90	70 - 130	1	20
o-Xylene	25.0	23.5		ug/L		94	70 - 130	2	20
sec-Butylbenzene	25.0	23.2		ug/L		93	70 - 130	0	20
Styrene	25.0	23.3		ug/L		93	70 - 130	2	20
Tert-amyl methyl ether	25.0	24.9		ug/L		99	70 - 130	1	20
Tert-butyl ethyl ether	25.0	24.5		ug/L		98	70 - 130	0	20
tert-Butylbenzene	25.0	23.4		ug/L		94	70 - 130	2	20
Tetrachloroethene	25.0	24.5		ug/L		98	70 - 130	3	20
Tetrahydrofuran	125	114		ug/L		91	70 - 130	4	20
Toluene	25.0	22.9		ug/L		91	70 - 130	3	20
trans-1,2-Dichloroethene	25.0	24.0		ug/L		96	70 - 130	0	20
trans-1,3-Dichloropropene	25.0	23.2		ug/L		93	70 - 130	0	20
Trichloroethene	25.0	23.7		ug/L		95	70 - 130	2	20
Trichlorofluoromethane	25.0	24.0		ug/L		96	70 - 130	2	20
Vinyl chloride	25.0	22.4		ug/L		90	70 - 130	0	20
Dibromomethane	25.0	24.4		ug/L		98	70 - 130	0	20

Surrogate	*LCSD %Recovery*	*LCSD Qualifier*	*Limits*
Toluene-d8 (Surr)	*98*		*70 - 130*
1,2-Dichloroethane-d4 (Surr)	*94*		*70 - 130*
4-Bromofluorobenzene (Surr)	*102*		*70 - 130*

Method: 522 MOD - 1,4 Dioxane (GC/MS SIM)

Lab Sample ID: MB 200-53504/1-A
Matrix: Water
Analysis Batch: 53519

Client Sample ID: Method Blank
Prep Type: Total/NA
Prep Batch: 53504

Analyte	MB Result	MB Qualifier	RL	MDL	Unit	D	Prepared	Analyzed	Dil Fac
1,4-Dioxane	ND		0.20		ug/L		03/27/13 14:05	03/27/13 18:12	1

Surrogate	*MB %Recovery*	*MB Qualifier*	*Limits*	*Prepared*	*Analyzed*	*Dil Fac*
1,4-Dioxane-d8 (Surr)	*79*		*70 - 130*	*03/27/13 14:05*	*03/27/13 18:12*	*1*

Lab Sample ID: LCS 200-53504/2-A
Matrix: Water
Analysis Batch: 53519

Client Sample ID: Lab Control Sample
Prep Type: Total/NA
Prep Batch: 53504

Analyte			Spike Added	LCS Result	LCS Qualifier	Unit	D	%Rec	%Rec. Limits		
1,4-Dioxane			8.00	6.67		ug/L		83	70 - 130		

Surrogate	*LCS %Recovery*	*LCS Qualifier*	*Limits*
1,4-Dioxane-d8 (Surr)	*84*		*70 - 130*

QC Association Summary

Client: ERM-Northeast
Project/Site: IDS Wayland

TestAmerica Job ID: 480-34637-1

GC/MS VOA

Analysis Batch: 108444

Lab Sample ID	Client Sample ID	Prep Type	Matrix	Method	Prep Batch
480-34637-1	MW1020-20130319-01	Total/NA	Water	8260C	
480-34637-3	MW1008-20130319-01	Total/NA	Water	8260C	
480-34637-4	MW1012-20130319-01	Total/NA	Water	8260C	
480-34637-5	MW1018-20130319-01	Total/NA	Water	8260C	
480-34637-6	MW1019B-20130319-01	Total/NA	Water	8260C	
480-34637-7	DUP-001-20130319-01	Total/NA	Water	8260C	
480-34637-8	MW1032-20130319-01	Total/NA	Water	8260C	
480-34637-9	MW-1005-20130319-01	Total/NA	Water	8260C	
LCS 480-108444/4	Lab Control Sample	Total/NA	Water	8260C	
LCSD 480-108444/5	Lab Control Sample Dup	Total/NA	Water	8260C	
MB 480-108444/7	Method Blank	Total/NA	Water	8260C	

Analysis Batch: 108596

Lab Sample ID	Client Sample ID	Prep Type	Matrix	Method	Prep Batch
480-34637-2	MW1017D-20130319-01	Total/NA	Water	8260C	
480-34637-5 - DL	MW1018-20130319-01	Total/NA	Water	8260C	
LCS 480-108596/4	Lab Control Sample	Total/NA	Water	8260C	
LCSD 480-108596/5	Lab Control Sample Dup	Total/NA	Water	8260C	
MB 480-108596/7	Method Blank	Total/NA	Water	8260C	

GC/MS Semi VOA

Prep Batch: 53504

Lab Sample ID	Client Sample ID	Prep Type	Matrix	Method	Prep Batch
480-34637-1	MW1020-20130319-01	Total/NA	Water	3535A	
LCS 200-53504/2-A	Lab Control Sample	Total/NA	Water	3535A	
MB 200-53504/1-A	Method Blank	Total/NA	Water	3535A	

Analysis Batch: 53519

Lab Sample ID	Client Sample ID	Prep Type	Matrix	Method	Prep Batch
480-34637-1	MW1020-20130319-01	Total/NA	Water	522 MOD	53504
LCS 200-53504/2-A	Lab Control Sample	Total/NA	Water	522 MOD	53504
MB 200-53504/1-A	Method Blank	Total/NA	Water	522 MOD	53504

Lab Chronicle

Client: ERM-Northeast
Project/Site: IDS Wayland

TestAmerica Job ID: 480-34637-1

Client Sample ID: MW1020-20130319-01 — Lab Sample ID: 480-34637-1

Date Collected: 03/19/13 12:00 — **Matrix: Water**
Date Received: 03/20/13 01:00

Prep Type	Batch Type	Batch Method	Run	Dilution Factor	Batch Number	Prepared or Analyzed	Analyst	Lab
Total/NA	Analysis	8260C		1	108444	03/21/13 13:07	LH	TAL BUF
Total/NA	Prep	3535A			53504	03/27/13 14:05	JAB	TAL BUR
Total/NA	Analysis	522 MOD		1	53519	03/27/13 18:27	RJH	TAL BUR

Client Sample ID: MW1017D-20130319-01 — Lab Sample ID: 480-34637-2

Date Collected: 03/19/13 14:10 — **Matrix: Water**
Date Received: 03/20/13 01:00

Prep Type	Batch Type	Batch Method	Run	Dilution Factor	Batch Number	Prepared or Analyzed	Analyst	Lab
Total/NA	Analysis	8260C		1	108596	03/22/13 01:25	LH	TAL BUF

Client Sample ID: MW1008-20130319-01 — Lab Sample ID: 480-34637-3

Date Collected: 03/19/13 11:45 — **Matrix: Water**
Date Received: 03/20/13 01:00

Prep Type	Batch Type	Batch Method	Run	Dilution Factor	Batch Number	Prepared or Analyzed	Analyst	Lab
Total/NA	Analysis	8260C		1	108444	03/21/13 13:55	LH	TAL BUF

Client Sample ID: MW1012-20130319-01 — Lab Sample ID: 480-34637-4

Date Collected: 03/19/13 10:30 — **Matrix: Water**
Date Received: 03/20/13 01:00

Prep Type	Batch Type	Batch Method	Run	Dilution Factor	Batch Number	Prepared or Analyzed	Analyst	Lab
Total/NA	Analysis	8260C		1	108444	03/21/13 14:18	LH	TAL BUF

Client Sample ID: MW1018-20130319-01 — Lab Sample ID: 480-34637-5

Date Collected: 03/19/13 13:40 — **Matrix: Water**
Date Received: 03/20/13 01:00

Prep Type	Batch Type	Batch Method	Run	Dilution Factor	Batch Number	Prepared or Analyzed	Analyst	Lab
Total/NA	Analysis	8260C		1	108444	03/21/13 14:42	LH	TAL BUF
Total/NA	Analysis	8260C	DL	5	108596	03/22/13 01:48	LH	TAL BUF

Client Sample ID: MW1019B-20130319-01 — Lab Sample ID: 480-34637-6

Date Collected: 03/19/13 13:55 — **Matrix: Water**
Date Received: 03/20/13 01:00

Prep Type	Batch Type	Batch Method	Run	Dilution Factor	Batch Number	Prepared or Analyzed	Analyst	Lab
Total/NA	Analysis	8260C		1	108444	03/21/13 15:06	LH	TAL BUF

Lab Chronicle

Client: ERM-Northeast
Project/Site: IDS Wayland

TestAmerica Job ID: 480-34637-1

Client Sample ID: DUP-001-20130319-01

Lab Sample ID: 480-34637-7

Date Collected: 03/19/13 12:12
Matrix: Water
Date Received: 03/20/13 01:00

Prep Type	Batch Type	Batch Method	Run	Dilution Factor	Batch Number	Prepared or Analyzed	Analyst	Lab
Total/NA	Analysis	8260C		1	108444	03/21/13 15:30	LH	TAL BUF

Client Sample ID: MW1032-20130319-01

Lab Sample ID: 480-34637-8

Date Collected: 03/19/13 10:55
Matrix: Water
Date Received: 03/20/13 01:00

Prep Type	Batch Type	Batch Method	Run	Dilution Factor	Batch Number	Prepared or Analyzed	Analyst	Lab
Total/NA	Analysis	8260C		1	108444	03/21/13 15:53	LH	TAL BUF

Client Sample ID: MW-1005-20130319-01

Lab Sample ID: 480-34637-9

Date Collected: 03/19/13 15:50
Matrix: Water
Date Received: 03/20/13 01:00

Prep Type	Batch Type	Batch Method	Run	Dilution Factor	Batch Number	Prepared or Analyzed	Analyst	Lab
Total/NA	Analysis	8260C		1	108444	03/21/13 16:17	LH	TAL BUF

Laboratory References:

TAL BUF = TestAmerica Buffalo, 10 Hazelwood Drive, Amherst, NY 14228-2298, TEL (716)691-2600

TAL BUR = TestAmerica Burlington, 30 Community Drive, Suite 11, South Burlington, VT 05403, TEL (802)660-1990

Certification Summary

Client: ERM-Northeast
Project/Site: IDS Wayland

TestAmerica Job ID: 480-34637-1

Laboratory: TestAmerica Buffalo

All certifications held by this laboratory are listed. Not all certifications are applicable to this report.

Authority	Program	EPA Region	Certification ID	Expiration Date
Arkansas DEQ	State Program	6	88-0686	07-06-13
California	NELAP	9	1169CA	09-30-13
Connecticut	State Program	1	PH-0568	09-30-14
Florida	NELAP	4	E87672	06-30-13
Georgia	State Program	4	N/A	03-31-13
Georgia	State Program	4	956	06-30-13
Georgia	State Program	4	956	06-30-13
Illinois	NELAP	5	200003	09-30-13
Iowa	State Program	7	374	03-01-13
Kansas	NELAP	7	E-10187	01-31-14
Kentucky	State Program	4	90029	12-31-13
Kentucky (UST)	State Program	4	30	04-01-13
Louisiana	NELAP	6	02031	06-30-13
Maine	State Program	1	NY00044	12-04-13
Maryland	State Program	3	294	03-31-13
Massachusetts	State Program	1	M-NY044	06-30-13
Michigan	State Program	5	9937	04-01-13
Minnesota	NELAP	5	036-999-337	12-31-13
New Hampshire	NELAP	1	2973	09-11-13
New Hampshire	NELAP	1	2337	11-17-13
New Jersey	NELAP	2	NY455	06-30-13
New York	NELAP	2	10026	03-31-13
North Dakota	State Program	8	R-176	03-31-13
Oklahoma	State Program	6	9421	08-31-13
Oregon	NELAP	10	NY200003	06-09-13
Pennsylvania	NELAP	3	68-00281	07-31-13
Rhode Island	State Program	1	LAO00328	12-31-13
Tennessee	State Program	4	TN02970	04-01-13
Texas	NELAP	6	T104704412-11-2	07-31-13
USDA	Federal		P330-11-00386	11-22-14
Virginia	NELAP	3	460185	09-14-13
Washington	State Program	10	C784	02-10-14
West Virginia DEP	State Program	3	252	09-30-13
Wisconsin	State Program	5	998310390	08-31-13

Laboratory: TestAmerica Burlington

All certifications held by this laboratory are listed. Not all certifications are applicable to this report.

Authority	Program	EPA Region	Certification ID	Expiration Date
Connecticut	State Program	1	PH-0751	09-30-13
DE Haz. Subst. Cleanup Act (HSCA)	State Program	3	NA	02-13-15
Florida	NELAP	4	E87467	06-30-13
L-A-B	DoD ELAP		L2336	10-26-13
Louisiana	NELAP	6	176292	06-30-13
Maine	State Program	1	VT00008	04-17-13
Minnesota	NELAP	5	050-999-436	12-31-13
New Hampshire	NELAP	1	200610	12-18-13
New Jersey	NELAP	2	VT972	06-30-13
New York	NELAP	2	10391	04-01-13
Pennsylvania	NELAP	3	68-00489	04-30-13
Rhode Island	State Program	1	LAO00298	12-30-13
USDA	Federal		P330-11-00093	02-17-14

Laboratory: TestAmerica Burlington (Continued)

All certifications held by this laboratory are listed. Not all certifications are applicable to this report.

Authority	Program	EPA Region	Certification ID	Expiration Date
Vermont	State Program	1	VT-4000	12-31-13
Virginia	NELAP	3	460209	12-14-13

Method Summary

Client: ERM-Northeast
Project/Site: IDS Wayland

TestAmerica Job ID: 480-34637-1

Method	Method Description	Protocol	Laboratory
8260C	Volatile Organic Compounds (GC/MS)	MA DEP	TAL BUF
522 MOD	1,4 Dioxane (GC/MS SIM)	EPA	TAL BUR

Protocol References:

EPA = US Environmental Protection Agency

MA DEP = Massachusetts Department Of Environmental Protection

Laboratory References:

TAL BUF = TestAmerica Buffalo, 10 Hazelwood Drive, Amherst, NY 14228-2298, TEL (716)691-2600

TAL BUR = TestAmerica Burlington, 30 Community Drive, Suite 11, South Burlington, VT 05403, TEL (802)660-1990

Sample Summary

Client: ERM-Northeast
Project/Site: IDS Wayland

TestAmerica Job ID: 480-34637-1

Lab Sample ID	Client Sample ID	Matrix	Collected	Received
480-34637-1	MW1020-20130319-01	Water	03/19/13 12:00	03/20/13 01:00
480-34637-2	MW1017D-20130319-01	Water	03/19/13 14:10	03/20/13 01:00
480-34637-3	MW1008-20130319-01	Water	03/19/13 11:45	03/20/13 01:00
480-34637-4	MW1012-20130319-01	Water	03/19/13 10:30	03/20/13 01:00
480-34637-5	MW1018-20130319-01	Water	03/19/13 13:40	03/20/13 01:00
480-34637-6	MW1019B-20130319-01	Water	03/19/13 13:55	03/20/13 01:00
480-34637-7	DUP-001-20130319-01	Water	03/19/13 12:12	03/20/13 01:00
480-34637-8	MW1032-20130319-01	Water	03/19/13 10:55	03/20/13 01:00
480-34637-9	MW-1005-20130319-01	Water	03/19/13 15:50	03/20/13 01:00

Login Sample Receipt Checklist

Client: ERM-Northeast

Job Number: 480-34637-1

Login Number: 34637
List Number: 1
Creator: Kolb, Chris M

List Source: TestAmerica Buffalo

Question	Answer	Comment
Radioactivity either was not measured or, if measured, is at or below background	N/A	
The cooler's custody seal, if present, is intact.	True	
The cooler or samples do not appear to have been compromised or tampered with.	True	
Samples were received on ice.	True	
Cooler Temperature is acceptable.	True	
Cooler Temperature is recorded.	True	
COC is present.	True	
COC is filled out in ink and legible.	True	
COC is filled out with all pertinent information.	True	
Is the Field Sampler's name present on COC?	True	
There are no discrepancies between the sample IDs on the containers and the COC.	True	
Samples are received within Holding Time.	True	
Sample containers have legible labels.	True	
Containers are not broken or leaking.	True	
Sample collection date/times are provided.	True	
Appropriate sample containers are used.	True	
Sample bottles are completely filled.	True	
Sample Preservation Verified	True	
There is sufficient vol. for all requested analyses, incl. any requested MS/MSDs	True	
VOA sample vials do not have headspace or bubble is <6mm (1/4") in diameter.	N/A	
If necessary, staff have been informed of any short hold time or quick TAT needs	True	
Multiphasic samples are not present.	True	
Samples do not require splitting or compositing.	True	
Sampling Company provided.	True	
Samples received within 48 hours of sampling.	True	
Samples requiring field filtration have been filtered in the field.	True	
Chlorine Residual checked.	N/A	

Login Sample Receipt Checklist

Client: ERM-Northeast

Job Number: 480-34637-1

Login Number: 34637
List Number: 1
Creator: Poucher, Stephanie A

List Source: TestAmerica Burlington
List Creation: 03/21/13 02:38 PM

Question	Answer	Comment
Radioactivity wasn't checked or is </= background as measured by a survey meter.	N/A	Lab does not accept radioactive samples.
The cooler's custody seal, if present, is intact.	True	711254
Sample custody seals, if present, are intact.	True	
The cooler or samples do not appear to have been compromised or tampered with.	True	
Samples were received on ice.	True	
Cooler Temperature is acceptable.	True	
Cooler Temperature is recorded.	True	4.0ºC IR GUN ID 181. CF 0
COC is present.	True	
COC is filled out in ink and legible.	True	
COC is filled out with all pertinent information.	True	
Is the Field Sampler's name present on COC?	N/A	Received project as a subcontract.
There are no discrepancies between the containers received and the COC.	True	
Samples are received within Holding Time.	True	
Sample containers have legible labels.	True	
Containers are not broken or leaking.	True	
Sample collection date/times are provided.	True	
Appropriate sample containers are used.	True	
Sample bottles are completely filled.	True	
Sample Preservation Verified.	True	
There is sufficient vol. for all requested analyses, incl. any requested MS/MSDs	True	
Containers requiring zero headspace have no headspace or bubble is <6mm (1/4").	True	
Multiphasic samples are not present.	True	
Samples do not require splitting or compositing.	True	
Residual Chlorine Checked.	N/A	Check done at department level as required.

TestAmerica Westfield
Westfield Executive Park 53 Southampton Road
Westfield, MA 01085
Phone (413) 572-4000 Fax (413) 572-3707

Boston Service Center
240 Bear Hill Rd. Suite 104
Waltham, MA 02451
Phone (781) 466-6900 Fax (781) 466-6901

Chain of Custody Record

TestAmerica
THE LEADER IN ENVIRONMENTAL TESTING

Client Information			
Client Contact: Jason Flattery	Sampler: Stacey Bragg	Lab PM:	Carrier Tracking No(s):
Company: ERM	Phone: 978-875-0426	E-Mail:	
Address: 1 Beacon St, 5th Floor	Due Date Requested:		
City: Boston	TAT Requested (days):		
State, Zip: MA 02108			
Phone: 1-617-447-0757	Quote #:		
Email: Jason.Flattery@erm.com	PO #:		
Project Name/number: Raytheon Wayland 0167058	WO #:		
Site: Wayland	SSOW#:		

COC No: 22856
Page: 1/
Job #: 480-34637

Preservation Codes:
A - HCL, B - NaOH, C - Zn Acetate, D - Nitric Acid, E - NaHSO4, F - MeOH, H - Ascorbic Acid, I - Ice, J - DI Water, M - Hexane, N - None, P - Na2O4S, Q - Na2SO3, R - Na2S2SO3, S - H2SO4, Z - other (specify)

Regulatory programs:
MCP [X] GW1/S1 [ ]
RCP [ ] CT RSR [ ]
DEP Form [ ] EDD Required [ ]

Analysis Requested

Sample Identification	Sample Date	Sample Time	Sample Type (C=comp, G=grab)	Matrix (W=water, S=solid, O=waste/oil, BT=Tissue, A=Air)	Sampler's Initials	Field Filtered Sample?	Perform MS/MSD?	8260MCP	8260B-SIM 1,4-Dioxane	522 MOD 1,4-Dioxane	Total Number of containers	Special Instructions/Note:
			Preservation Code:									
MW1020-20130319-01	3/19/13	12:00		W	SD			3	2	1	6	
MW1017D-20130319-01	3/19/13	14:10		W	SD			3			3	
MW1008-20130319-01	3/19/13	11:45		W	CC			3			3	
MW1012-20130319-01	3/19/13	10:30		W	CC			3			3	
MW1018-20130319-01	3/19/13	13:40		W	CC			3			3	
MW-1019B-20130319-01	3/19/13	13:55		W	BM			3			3	
PUP-001-20130319-01	3/19/13	12:12		W	DM			3			3	
MW-1032-20130319-01	3/19/13	10:55		W	BM			3			3	
MW1005-20130319-01	3/19/13	15:50		W	BM			3			3	

Possible Hazard Identification
[X] Non-Hazard [ ] Flammable [ ] Skin Irritant [ ] Poison B [ ] Unknown [ ] Radiological

Sample Disposal (A fee may be assessed if samples are retained longer than 1 month)
[ ] Return To Client [X] Disposal By Lab [ ] Archive For _____ Months

Deliverable Requested: I, II, III, IV, Other (specify)

Special Instructions/QC Requirements:

Relinquished by:	Date/Time:	Company	Received by:	Date/Time:	Company
[signature]	3/19/13 3:50	ERM	[signature]	3/19/13 3:50	TAL
[signature]	3/19/13 1630	TAL	[signature]	03/20/13 0100	TA

Custody Seals Intact: Δ Yes Δ No
Custody Seal No.:
Cooler Temperature(s) °C and Other Remarks: temp 2.4 ICE #1

TAL-8245-360 1111

Field Colorimetry
Data Form
WATER SAMPLES

Analyst:	C. Corvi
Date:	03/25/2013
Checked by:	S. Carvalho
Site Name:	Raytheon Wayland
Project Number:	196270.01
Project Manager:	Jason Flattery

Sample Name	Collection Date / Time	Preservative (Note)	Color	Measured (ppm)	Dilution (X factor)	Concentration as $KMnO_4$ (ppm)	Concentration as $NaMnO_4$ (ppm)	Concentration as $NaMnO_4$ (%)	Notes
Groundwater Monitoring Locations									
MW-1010M	3/20/2013	Ice only	Pink	2.7	1	2.7	**< 1**	0.00%	

Appendix E
Waste Disposal Documentation

Site Address : Boston Post Road 400-440
Wayland,MA 01778

SC PPW 3/3/2011
WORK ORDER NO ~~SB5015399-003~~

DOCUMENT NO. 544615

STRAIGHT BILL OF LADING

TRANSPORTER 1 ~~Clean Harbors Environmental Services Inc~~ VEHICLE ID # 5427

EPA ID # ~~MAD039322250~~ TRANS. 1 PHONE ~~(781) 792-5000~~

TRANSPORTER 2 _____ VEHICLE ID # _____

EPA ID # _____ TRANS. 2 PHONE _____

DESIGNATED FACILITY Clean Harbors of Braintree Inc	SHIPPER ATTN: JONATHAN HONE Raytheon
FACILITY EPA ID # MAD053452637	SHIPPER EPA ID # ~~[illegible]~~ MAC300008828 (DAC)
ADDRESS 1 Hill Avenue	ADDRESS ~~Boston Post Road~~ 880 TECHNOLOGY PARK DRIVE (DAC)
CITY Braintree STATE MA ZIP 02184	CITY ~~Wayland~~ BILLERICA (DAC) STATE MA ZIP 01821 ~~01778~~

CONTAINERS NO. & SIZE	TYPE	HM	DESCRIPTION OF MATERIALS	TOTAL QUANTITY	UNIT WT/VOL
2/85G	DM		A. NON HAZARDOUS, NON D.O.T. REGULATED, (WATER)	1200	P
			B.		
			C.		
			D.		
			E.		
			F.		
			G.		
			H.		

SPECIAL HANDLING INSTRUCTIONS **EMERGENCY PHONE #: (800) 483-6718** **GENERATOR: Raytheon**
A.CH611552

SHIPPERS CERTIFICATION: This is to certify that the above named materials are properly classified, described, packaged, marked and labeled and are in proper condition for transportation according to the applicable regulations of the Department of Transportation.

SHIPPER	PRINT Blake Brunelle	SIGN [signature]	DATE 2-22-13
TRANSPORTER 1	PRINT DAVID ISABELLE	SIGN [signature]	DATE 2-22-13
TRANSPORTER 2	PRINT	SIGN	DATE
RECEIVED BY	PRINT Huyen Hoang	SIGN [signature]	DATE 2-22-13

1

CHI 107

D15007366 SC PPW 3/3/2011

Please print or type. (Form designed for use on elite (12-pitch) typewriter.)

Form Approved. OMB No. 2050-0039

UNIFORM HAZARDOUS WASTE MANIFEST

1. Generator ID Number: ~~PEN[illegible]~~ MAC300008828 (DAC)
2. Page 1 of 1
3. Emergency Response Phone: (800) 483-3718
4. Manifest Tracking Number: 006631908 FLE

5. Generator's Name and Mailing Address
Raytheon
~~Boston Post Road~~ 880 TECHNOLOGY PARK DRIVE MS:3029-07 SAME
~~Wayland, MA 01778~~ BILLERICA, MA 01821 (DAC)
Generator's Phone: (978) 604-8398 ATTN: JONATHON HONE

Generator's Site Address (if different than mailing address)
BOSTON POST ROAD
WAYLAND, MASSACHUSETTS 01782-0000

6. Transporter 1 Company Name: Clean Harbors Environmental Services Inc
U.S. EPA ID Number: MAD039322250

7. Transporter 2 Company Name: CLEAN HARBORS ENVIRONMENTAL SERVICES INC
U.S. EPA ID Number: MAD039322250

8. Designated Facility Name and Site Address
Clean Harbors Chattanooga LLC
3300 Cummings Road
Chattanooga, TN 37419
Facility's Phone: (423) 821-6926
U.S. EPA ID Number: TND982141392

9a. HM	9b. U.S. DOT Description (including Proper Shipping Name, Hazard Class, ID Number, and Packing Group (if any))	10. Containers No.	10. Containers Type	11. Total Quantity	12. Unit Wt./Vol.	13. Waste Codes		
	1. NON HAZARDOUS, NON D.O.T. REGULATED, (WATER)	001	DM	55	G	MA99		
	2. NON HAZARDOUS, NON D.O.T. REGULATED, (WATER)	002	TP	550	G	MA99		
	3. NON HAZARDOUS, NON D.O.T. REGULATED, (WATER,MUD)	001	DM	55	G	MA99		
	4.							

14. Special Handling Instructions and Additional Information
1 CH611552 1 X 55
2 CH611552 2 X TOTE
3 CH611561 1 X 55

15. **GENERATOR'S/OFFEROR'S CERTIFICATION:** I hereby declare that the contents of this consignment are fully and accurately described above by the proper shipping name, and are classified, packaged, marked and labeled/placarded, and are in all respects in proper condition for transport according to applicable international and national governmental regulations. If export shipment and I am the Primary Exporter, I certify that the contents of this consignment conform to the terms of the attached EPA Acknowledgment of Consent.
I certify that the waste minimization statement identified in 40 CFR 262.27(a) (if I am a large quantity generator) or (b) (if I am a small quantity generator) is true.

Generator's/Offeror's Printed/Typed Name: Jonathan Hone
Signature: [signature]
Month 2 Day 20 Year 13

16. International Shipments ☐ Import to U.S. ☐ Export from U.S. Port of entry/exit:
Transporter signature (for exports only): Date leaving U.S.:

17. Transporter Acknowledgment of Receipt of Materials
Transporter 1 Printed/Typed Name: John Powers
Signature: John Powers
Month 2 Day 20 Year 13
Transporter 2 Printed/Typed Name: Keith Smyth
Signature: [signature] M.Y Fields
Month 2 Day 20 Year 13

18. Discrepancy
18a. Discrepancy Indication Space ☐ Quantity ☐ Type ☐ Residue ☐ Partial Rejection ☐ Full Rejection
Manifest Reference Number:
18b. Alternate Facility (or Generator) U.S. EPA ID Number
Facility's Phone:
18c. Signature of Alternate Facility (or Generator) Month Day Year

19. Hazardous Waste Report Management Method Codes (i.e., codes for hazardous waste treatment, disposal, and recycling systems)
1. H077 2. H077 3. H141 4.

20. Designated Facility Owner or Operator: Certification of receipt of hazardous materials covered by the manifest except as noted in Item 18a
Printed/Typed Name: Doug Kelly
Signature: [signature]
Month 03 Day 01 Year 13

GENERATOR | INT'L | TRANSPORTER | DESIGNATED FACILITY

EPA Form 8700-22 (Rev. 3-05) Previous editions are obsolete.

DESIGNATED FACILITY TO GENERATOR

Clean Harbors has the appropriate permits for and will accept the waste the generator is shipping.

Please print or type. (Form designed for use on elite (12-pitch) typewriter.)

Form Approved. OMB No. 2050-0039

UNIFORM HAZARDOUS WASTE MANIFEST (Continuation Sheet)

21. Generator ID Number: MAL3000088828

22. Page: 2

23. Manifest Tracking Number: 006631908 FLE

24. Generator's Name: Raytheon

25. Transporter 3 Company Name: Robbie D. Wood

U.S. EPA ID Number: AVD017138891

26. Transporter _____ Company Name

U.S. EPA ID Number

27a. HM	27b. U.S. DOT Description (including Proper Shipping Name, Hazard Class, ID Number, and Packing Group (if any))	28. Containers No.	28. Containers Type	29. Total Quantity	30. Unit Wt./Vol.	31. Waste Codes		

32. Special Handling Instructions and Additional Information

GENERATOR

TRANSPORTER

33. Transporter 3 Acknowledgment of Receipt of Materials

Printed/Typed Name: William Bush

Signature: William Bush

Month: 2 Day: 27 Year: 13

34. Transporter _____ Acknowledgment of Receipt of Materials

Printed/Typed Name

Signature

Month Day Year

DESIGNATED FACILITY

35. Discrepancy

36. Hazardous Waste Report Management Method Codes (i.e., codes for hazardous waste treatment, disposal, and recycling systems)

EPA Form 8700-22A (Rev. 3-05) Previous editions are obsolete.

DESIGNATED FACILITY TO GENERATOR